DELPHI

Maureen Pearson, Esq.
Global Customs & Export Counsel
Empowered Official

September 6, 2013

Submitted Electronically Via publiccomments@bis.doc.gov
Regulatory Policy Division
Bureau of Industry and Security
Room 2099B
U.S. Department of Commerce
14th Street and Pennsylvania Ave. NW.
Washington, DC 20230

RE: Federal Register: July 25, 2013 (Volume 76, Number 143)

RIN 0694–AF64: Revisions to the Export Administration Regulations (EAR): Control of Military Electronic Equipment and Related Items the President Determines No Longer Warrant Control Under the United States Munitions List (USML)

Dear Sir or Madam:

This comment is submitted by Delphi Corporation ("Delphi") on behalf of its Delphi Connection Systems subsidiary.

Comments on Scope of Items Contained in Proposed ECCN 3A611.y

The proposed rule lists the following items in 3A611.y:

> 3A611.y. Specific "parts," "components," "accessories" and "attachments" "specially designed" for a commodity subject to control in this entry and not elsewhere specified in any 600-series ECCN as follows:
>
> y.1 "electric couplings"
> ...
> y.3 "electric connectors"
> ...
> y.17 "electric connector backshells"

Delphi manufactures numerous such electric couplings, connectors, and connector backshells, and believes their control at the lower level of 3A611.y is appropriate, assuming the items are "specially designed" for 600-series items.

Delphi also manufactures very similar fiber-optic couplings, connectors, and connector backshells. These items generally share similar form factors, and serve the same general interconnection function, and share a similar level of technology. In some cases, Delphi electric and fiber-optic connectors differ only in that fiber-optic termini are substituted for electrical contacts.

5725 Delphi Drive, Troy, Michigan USA 48098 Tel: +1 248.813.1150 Email: maureen.pearson@delphi.com

We have provided copies of product brochures for Delphi Connection Systems Type M28840 electrical connector and Type M28876 fiber optic connector. The M28840 electrical connector was developed first, and the M28876 derived from it, substituting EAR99 fiber optic termini.

Due to design convergence between electric and fiber-optic connectors, Delphi recommends that these categories be amended to insert "or data transmission" after "electric" in each of the three sub-categories. This change would permit Delphi to classify similar electrical and fiber optic connectors at the same export control level, with would greatly facilitate movement of such products, as they are frequently shipped in the same consignments.

Sincerely,

Maureen Pearson

Attachments:
Type M28840 product literature
Type M28876 product literature

5725 Delphi Drive, Troy, Michigan USA 48098 Tel: +1 248.813.1150 Email: maureen.pearson@delphi.com

M28876 Fiber Optic Connectors

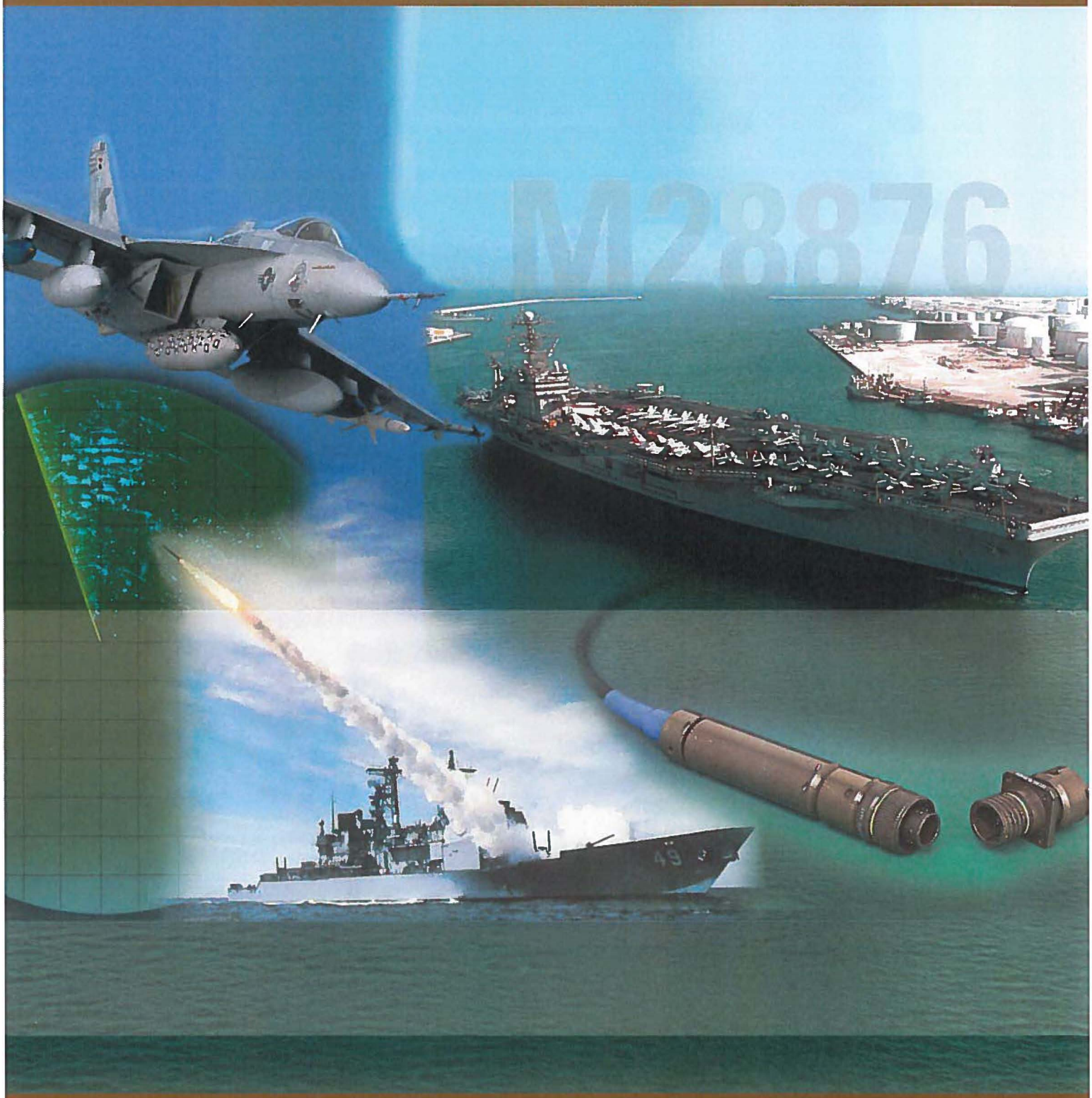

DELPHI

Delphi Connection Systems, formerly Packard-Hughes Interconnect, develops, engineers and manufactures MIL-C-28876 qualified fiber optic connectors and cable assemblies.

Delphi's M28876 fiber optic connectors feature low optical insertion loss, repeatability, exceptional strain relief, and reliability in harsh environments.

Benefits/Features:

- Available in 2, 4, 6, 8, 18 and 31 channel configurations
- Qualified to MIL-C-28876 specification
- Singlemode and multimode capability
- Hybrid (electro-optic) versions available
- Point-to-point interconnection system
- Full environmental sealing
- In-line and wall mount receptacle
- Utilizes field proven Delphi Termini**
- Field maintainable
- Comprehensive range of cable assemblies

Commercial-Off-The-Shelf (COTS) equivalents are available that maintain key performance factors of the MIL-SPEC versions.

Complete tool kits and support infrastructure are commercially available to support this product line.

Delphi's M28876 connectors are used extensively by the United States and allied naval forces in shipboard applications, and have been on the United States government's Qualified Products List (QPL) since 1983.

Typical Applications:

- Navy shipboard
- Military and commercial
- Hybrid configurations for electro-optical signal transmission

Contents

Characteristics, Benefits, Features and Applications 2

Cable Assemblies 4

Connector Performance Criteria 5

Ordering Nomenclature: Connectors
- **MIL-SPEC** 6
- **Commercial Equivalent** 7

Plug Connectors 8

Wall Mount Receptacles 10

Jam Nut Receptacles 12

Ordering Nomenclature: Dust Covers
- **MIL-SPEC** 14
- **Commercial Equivalent** 15

Insert Arrangements 16

Keying Arrangements 17

Fiber Optic Product Families 18

Factory/Distribution Support 19

Key Words:

COTS	*— Commercial-Off-The-Shelf*
MIL-SPEC	*— Military Specification*
MIL-STD	*— Military Standard*
SM	*— Singlemode*
MM	*— Multimode*

** For those applications not requiring MIL-SPEC qualified parts, Delphi also offers full performance commercial equivalents.*

*** Please refer to Delphi's Fiber Optic Termini MIL-T-29504 and Commercial Equivalent catalog.*

M28876 Cable Assemblies

Delphi Connection Systems provides complete cable assembly services in accordance with specifications for the application requirements. The performance capabilities designed into our MIL-C-28876 connectors (or COTS equivalents) are most effective when incorporated into properly terminated cable assemblies.

Delphi Connection Systems has held a leadership position in the designing, engineering, and manufacturing of fiber optic interconnects for more than 25 years. Our innovative fiber optic technologies in military, aerospace, and automotive systems underscore the high reliability of our harsh environment connectors and cable assemblies.

Delphi engineers can review drawings or provide design assistance to develop drawings, always providing the highest quality and performance to meet our customers' goals. We work with virtually any cable manufacturer to help select the cables that are most appropriate to the application.

Our facilities are equipped to provide a full range of assembly services to meet customers' needs, whether for full military compliance (MIL-STD-2042), specific customer defined requirements, or simply the "best commercial practices."

Delphi's quality systems are in place: Our employees are highly trained, skilled, and motivated, and our test equipment provides certification of cables prior to shipment. Tests reports are available with shipments.

Fiber Termini –
The foundation of our connectors and assemblies

Self-aligning termini provide perfect contact in every mating of Delphi's harsh environment products. The Optical Insertion Loss and Optical Backreflection for singlemode are based upon Delphi's field proven optical termini. These termini are available in both full MIL-SPEC and COTS versions.

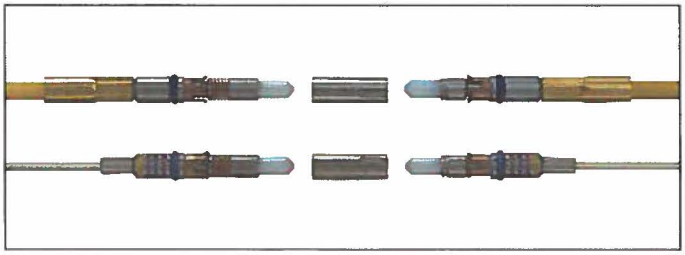

Please refer to the Fiber Optic Termini MIL-T-29504 and Commercial Equivalent catalog covering the various options for fiber termini, crimp sleeves and sealing options available for these connectors.

Connector Performance Criteria

Description	Specifications
Optical Insertion Loss*	9/125 SM Fiber -0.25 dB avg., 62.5/125 MM Fiber -0.6 dB avg. *Note - Values measured at 1300 nm per TIA/EIA-455-34*
Optical Backreflection (SM)*	Better than -40 dB with PC polish, better than -50 dB with enhanced PC polish
Durability	500 cycles per EIA-455-21
Vibration	Per MIL-STD-1344, Method 2005, Condition II & VI
Mechanical Shock	Per MIL-S-901, Grade A
Thermal Cycling	-62°C to +70°C per MIL-STD-1344, Method 1003
Corrosion Resistance	500 hour salt spray per MIL-STD-1344, Method 1001
Ozone Exposure	150 PPM/2 hours per MIL-STD-1344, Method 1007
Humidity	240 hours per MIL-STD-1344, Method 1002
Fluid Immersion	Per MIL-STD-1344, Method 1016
Crush Resistance	225 pounds per MIL-STD-1344, Method 2008.1
Maintenance Aging	Per MIL-STD-1344, Method 2002
Terminus Retention Force	22 pounds minimum per MIL-STD-1344, Method 2007
Insert Retention Axial	100 PSI minimum per MIL-STD-1344, Method 2010
Cable Pull Out Force	162 pounds minimum per MIL-STD-1344, Method 2009
Cable Seal Flexing	100 cycles per MIL-STD-1344, Method 2017
Impact	Per MIL-STD-1344, Method 2015
Flammability	Per MIL-STD-1344, Method 1012
Operating Temperature Range	-54°C to +65°C
Storage Temperature Range	-62°C to +71°C

**Optical performance data figures are derived from actual field measurements taken from thousands of mated pairs of termini across Delphi's line of multichannel connectors.*

Standard Materials and Finishes

Description	Material	Finish
Insert	Per MIL-C-28876	Per MIL-C-28876
Boot, Strain Relief	Fluorosilicone	None
Connector and Backshell Housings	Per MIL-C-28876	Per MIL-C-28876

Connectors

MIL-SPEC Ordering Nomenclature

M28876/ 7 B 1 2 P 1 N

MIL-SPEC Slash Number
See Table I

Shell Size Designator
See Table II

Insert Designator
See Table II

Backshell Designator
See Table III

Terminus Designator
P = Pin
S = Socket

Keying Arrangement Designator
1 thru **6** (See Page 17)

Add **N** if strain relief, insert retention nut, and pressure sleeve **are not** required – otherwise omit this designator (slash numbers 1, 6, and 11 only).

Table I

Connector Type	Strain Relief	MIL-SPEC Slash Number	Commercial Equivalent Part Number
Receptacle, Wall Mount	None	**M28876/1**	4567626*
			4565141
	Straight	**M28876/2**	1145840
	45°	**M28876/3**	1147630
	90°	**M28876/4**	1147640
Receptacle, In-Line	Straight	**M28876/5**	1145841
Plug	None	**M28876/6**	4567628*
			4565143
	Straight	**M28876/7**	1145846
	45°	**M28876/8**	1147636
	90°	**M28876/9**	1147646
Receptacle, Jam Nut	None	**M28876/11**	4567627*
			4565142
	Straight	**M28876/12**	1145844
	45°	**M28876/13**	1147634
	90°	**M28876/14**	1147644

** These items do not contain a strain relief, insert retention nut, or pressure sleeve. This is to expose accessory threads for addition of backshell.*

Table II (See Page 16)

Shell Size	Shell Size Designator	Number of Cavities	Insert Designator
11	**A**	02	**1**
13	**B**	04	**1**
15	**C**	06	**2**
		08	**1**
23	**F**	18	**2**
		31	**1**

Table III

Backshell Designator	Maximum Allowable Cable Diameter by Shell Size			
	11	**13**	**15**	**23**
1	.250 [6.35]	.285 [7.24]	.500 [12.70]	.866 [22.00]
2	.346 [8.79]	.346 [8.79]	.250 [6.35]	1.000 [25.40]
3			.375 [9.53]	.600 [15.24]

Omit backshell designator if strain relief is not required.

Dimensions shown are for reference only. Unless otherwise specified, dimensions are in inches and [millimeters].

Connectors

Commercial Equivalent Ordering Nomenclature

1145846 – B 04 2 P 1 S

- **Commercial Part Number** See Table I
- **Shell Size Designator** See Table II
- **Number of Cavities** See Table II
- **Backshell Designator** See Table III
- **Terminus Designator** P = Pin, S = Socket
- **Keying Arrangement Designator** 0 thru 6 (See Page 17)
- **Sales Designator** See Table I

Table I

Connector Type	Strain Relief	Commercial Part Number	Sales Designator	MIL-SPEC Equivalent Slash Number
Receptacle, Wall Mount	None	**4567626***	**H**	M28876/1
		4565141	**S**	
	Straight	**1145840**	**S**	M28876/2
	45°	**1147630**	**S**	M28876/3
	90°	**1147640**	**S**	M28876/4
Receptacle, In-Line	Straight	**1145841**	**S**	M28876/5
Plug	None	**4567628***	**H**	M28876/6
		4565143	**S**	
	Straight	**1145846**	**S**	M28876/7
	45°	**1147636**	**S**	M28876/8
	90°	**1147646**	**S**	M28876/9
Receptacle, Jam Nut	None	**4567627***	**H**	M28876/11
		4565142	**S**	
	Straight	**1145844**	**S**	M28876/12
	45°	**1147634**	**S**	M28876/13
	90°	**1147644**	**S**	M28876/14

** These items do not contain a strain relief, insert retention nut, or pressure sleeve. This is to expose accessory threads for addition of backshell.*

Table II (See Page 16)

Shell Size	Shell Size Designator	Number of Cavities	Insert Designator
11	**A**	**02**	1
13	**B**	**04**	1
15	**C**	**06**	2
		08	1
23	**F**	**18**	2
		31	1

Table III

Backshell Designator	Maximum Allowable Cable Diameter by Shell Size			
	11	**13**	**15**	**23**
1	.250 [6.35]	.285 [7.24]	.500 [12.70]	.866 [22.00]
2	.346 [8.79]	.346 [8.79]	.250 [6.35]	1.000 [25.40]
3			.375 [9.53]	.600 [15.24]

Omit backshell designator if strain relief is not required.

Dimensions shown are for reference only. Unless otherwise specified, dimensions are in inches and [millimeters].

Plug Connectors

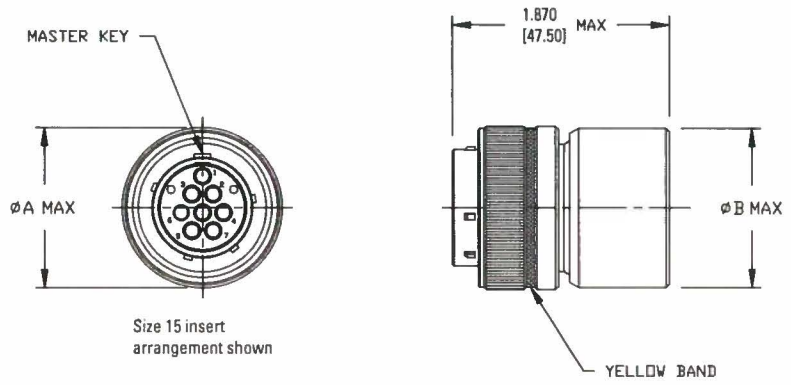

M28876/6 or 4565143

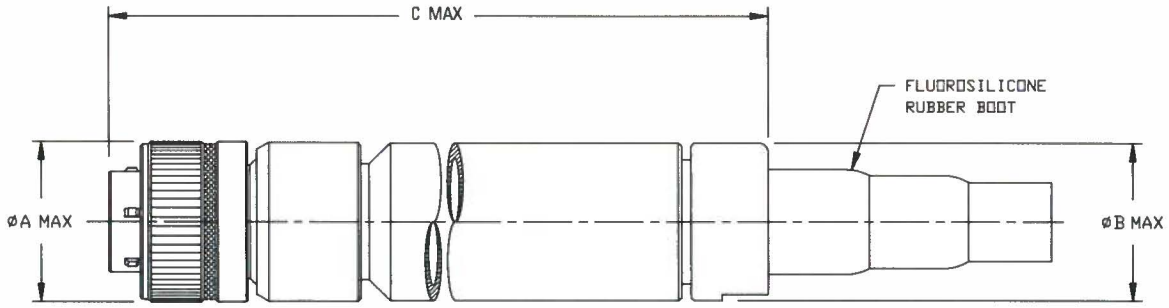

M28876/7 or 1145846

Dimension Table, Plug Connectors

Connector Size	ØA Max.	ØB Max.	C Max.	D Max.	E Max.	F Max.	G Max.
11	1.028 [26.11]	.960 [24.38]	5.960 [151.38]	6.090 [154.69]	3.540 [89.92]	4.190 [106.43]	4.250 [107.95]
13	1.141 [28.98]	1.085 [27.56]	5.960 [151.38]	6.160 [156.46]	3.580 [90.93]	4.190 [106.43]	4.250 [107.95]
15	1.263 [32.08]	1.257 [31.93]	5.960 [151.38]	6.440 [163.58]	3.850 [97.79]	4.440 [112.78]	4.500 [114.30]
23	1.705 [43.31]	1.703 [43.26]	5.960 [151.38]	7.350 [186.69]	5.000 [127.00]	4.850 [123.19]	5.000 [127.00]

Dimensions shown are for reference only. Unless otherwise specified, dimensions are in inches and [millimeters].

Plug Connectors

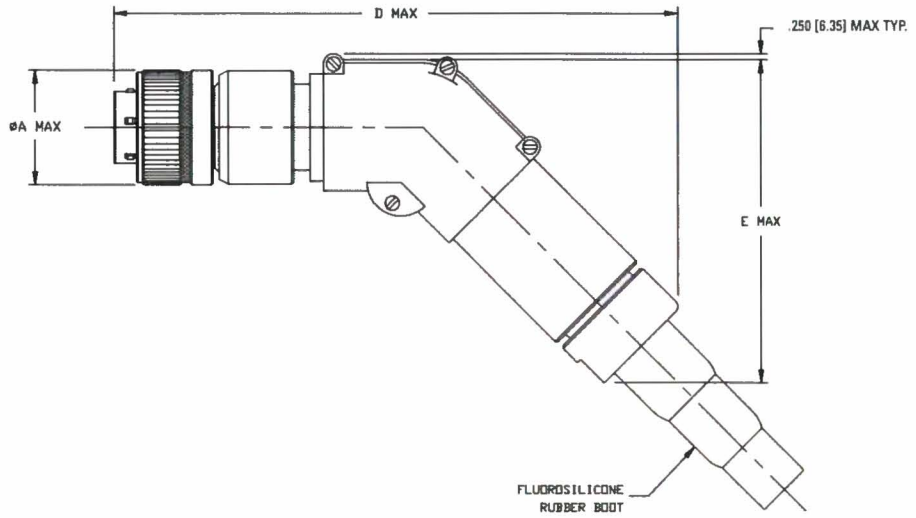

M28876/8 or 1147636

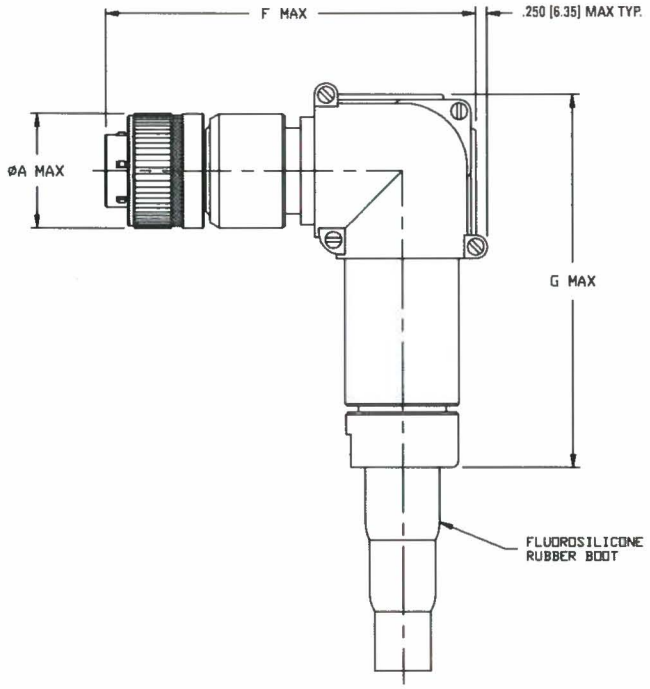

M28876/9 or 1147646

Dimensions shown are for reference only. Unless otherwise specified, dimensions are in inches and [millimeters].

Wall Mount Receptacles

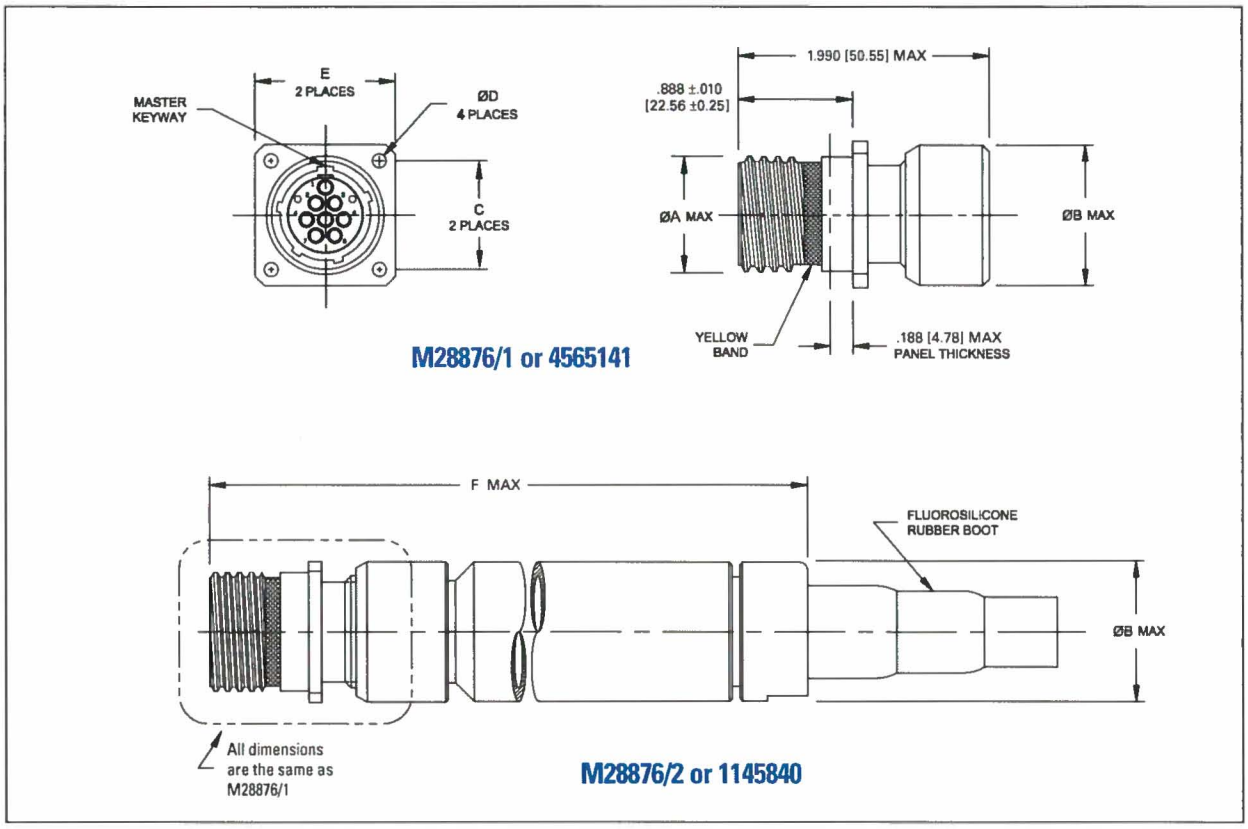

Dimension Table, Wall Mount Receptacles

Connector Size	ØA Max.	ØB Max.	C	ØD	E	F Max.	G Max.	H Max.	J Max.	K Max.
11	.750 [19.05]	.960 [24.38]	.750 [19.05]	.130 [3.30] .115 [2.92]	1.043 [26.49] 1.001 [25.43]	6.150 [156.21]	6.150 [156.21]	3.540 [89.92]	4.250 [107.95]	4.250 [107.95]
13	.875 [22.23]	1.085 [27.56]	.843 [21.41]	.130 [3.30] .115 [2.92]	1.158 [29.41] 1.116 [28.35]	6.150 [156.21]	6.250 [158.75]	3.580 [90.93]	4.250 [107.95]	4.250 [107.95]
15	1.062 [26.97]	1.257 [31.93]	.968 [24.59]	.130 [3.30] .115 [2.92]	1.278 [32.46] 1.236 [31.39]	6.150 [156.21]	6.500 [165.10]	3.850 [97.79]	4.500 [114.30]	4.500 [114.30]
23	1.500 [38.10]	1.703 [43.26]	1.281 [32.54]	.130 [3.30] .115 [2.92]	1.738 [44.15] 1.698 [43.13]	6.150 [156.21]	7.500 [190.50]	5.000 [127.00]	5.000 [127.00]	5.000 [127.00]

Dimensions shown are for reference only. Unless otherwise specified, dimensions are in inches and [millimeters].

Wall Mount Receptacles

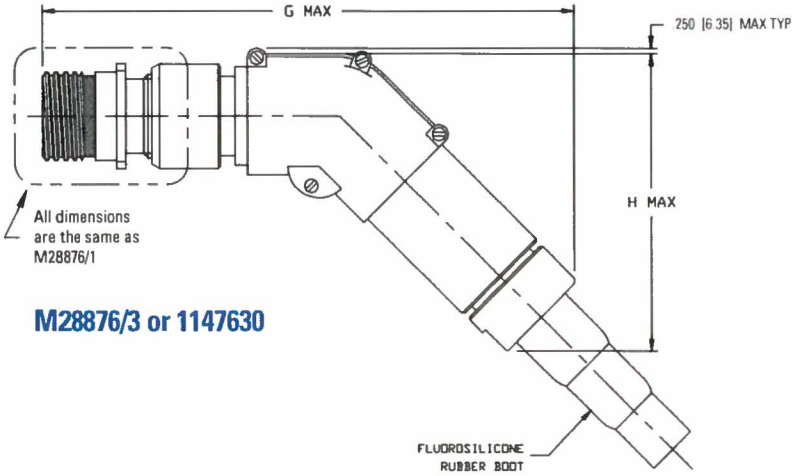

M28876/3 or 1147630

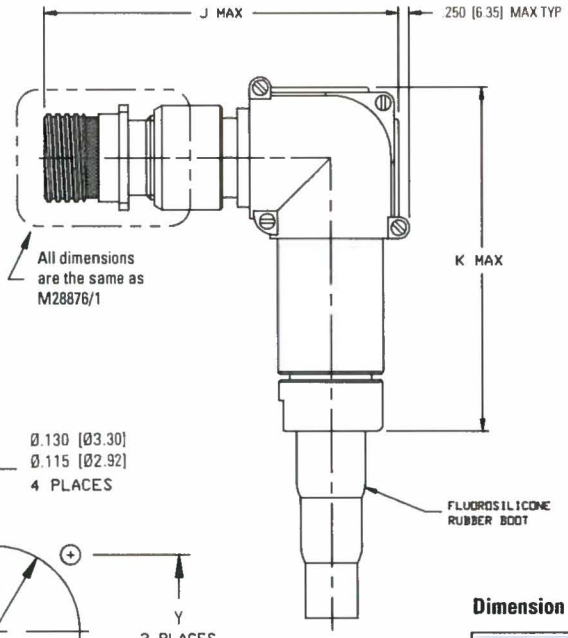

M28876/4 or 1147640

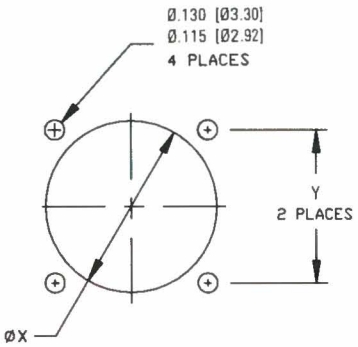

Recommended Panel Cutout (Wall Mounting)

Dimension Table Panel Cutout, Wall Mount Receptacles

Shell Size	ØX ±.005 [0.13]	Y ±.005 [0.13]
11	.812 [20.62]	.750 [19.05]
13	.937 [23.80]	.843 [21.41]
15	1.124 [28.55]	.968 [24.59]
23	1.562 [39.67]	1.281 [32.54]

Dimensions shown are for reference only. Unless otherwise specified, dimensions are in inches and [millimeters].

Jam Nut Receptacles

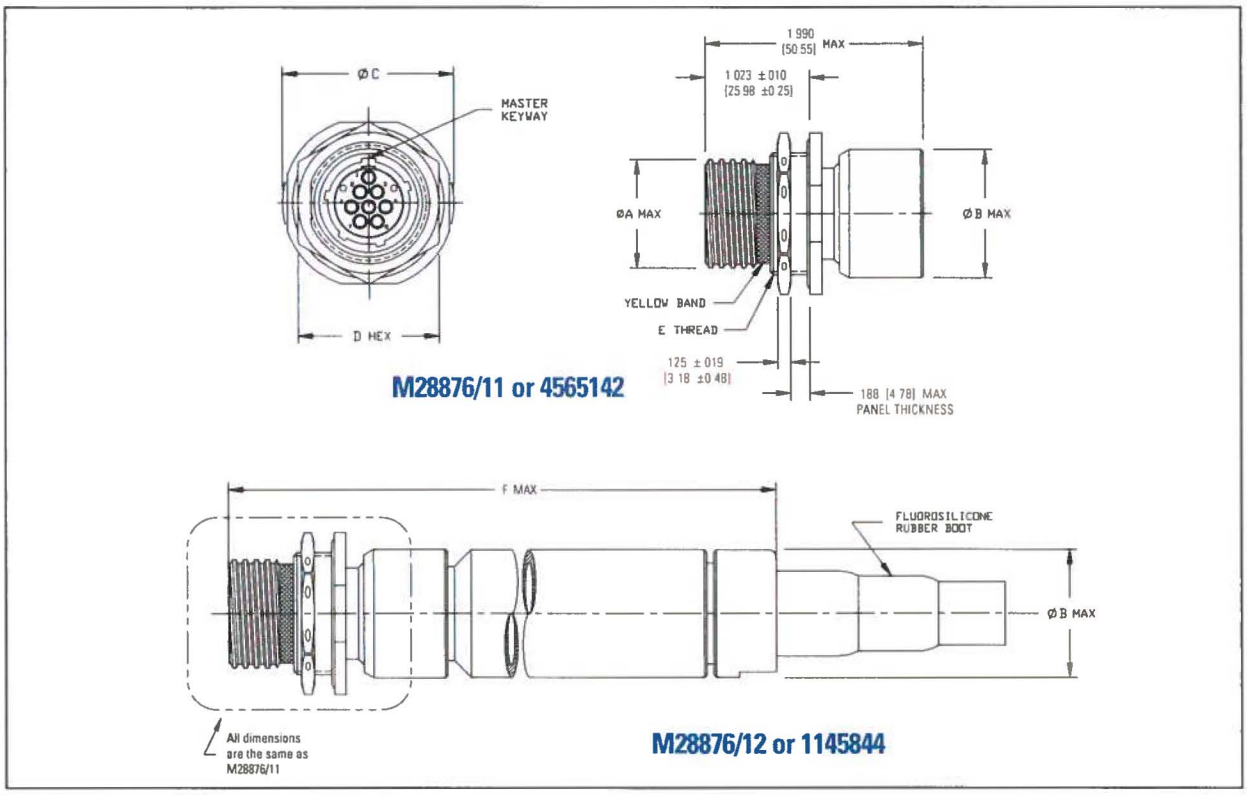

Dimension Table, Jam Nut Mounting Receptacles

Connector Size	ØA Max.	ØB Max.	ØC	D Hex	E Thread	F Max.	G Max.	H Max.	J Max.	K Max.
11	.750 [19.05]	.960 [24.38]	1.368 [34.75] 1.345 [34.16]	1.079 [27.41] 1.045 [26.54]	.875-20 UNEF	6.150 [156.21]	6.150 [156.21]	3.540 [89.92]	4.250 [107.95]	4.250 [107.95]
13	.875 [22.23]	1.085 [27.56]	1.508 [38.30] 1.485 [37.72]	1.205 [30.61] 1.171 [29.74]	1.000-20 UNEF	6.150 [156.21]	6.250 [158.75]	3.580 [90.93]	4.250 [107.95]	4.250 [107.95]
15	1.062 [26.97]	1.257 [31.93]	1.680 [42.67] 1.600 [40.64]	1.392 [35.36] 1.358 [34.49]	1.187-18 UNEF	6.150 [156.21]	6.500 [165.10]	3.850 [97.79]	4.500 [114.30]	4.500 [114.30]
23	1.500 [38.10]	1.703 [43.26]	2.118 [53.80] 2.095 [53.21]	1.829 [46.46] 1.795 [45.59]	1.625-18 UNEF	6.150 [156.21]	7.500 [190.50]	5.000 [127.00]	5.000 [127.00]	5.000 [127.00]

Dimensions shown are for reference only. Unless otherwise specified, dimensions are in inches and [millimeters].

Jam Nut Receptacles

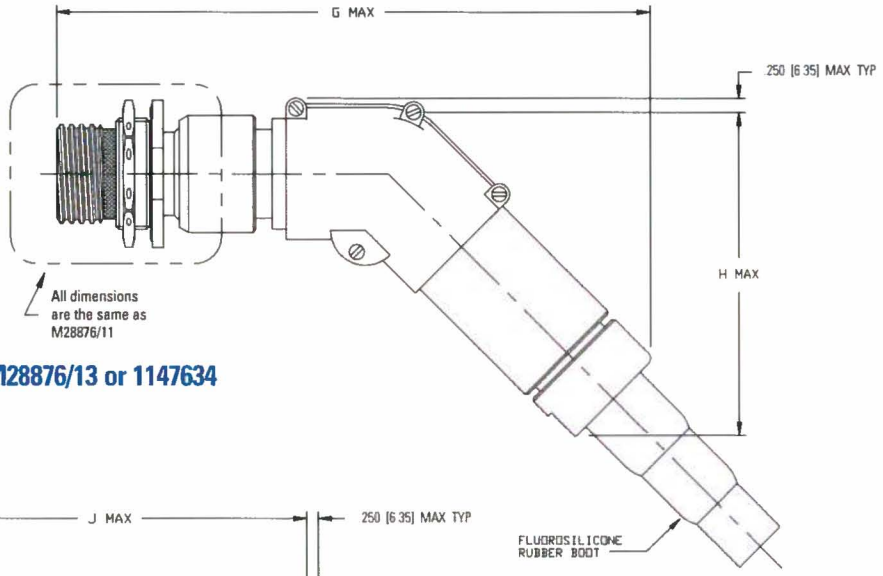

M28876/13 or 1147634

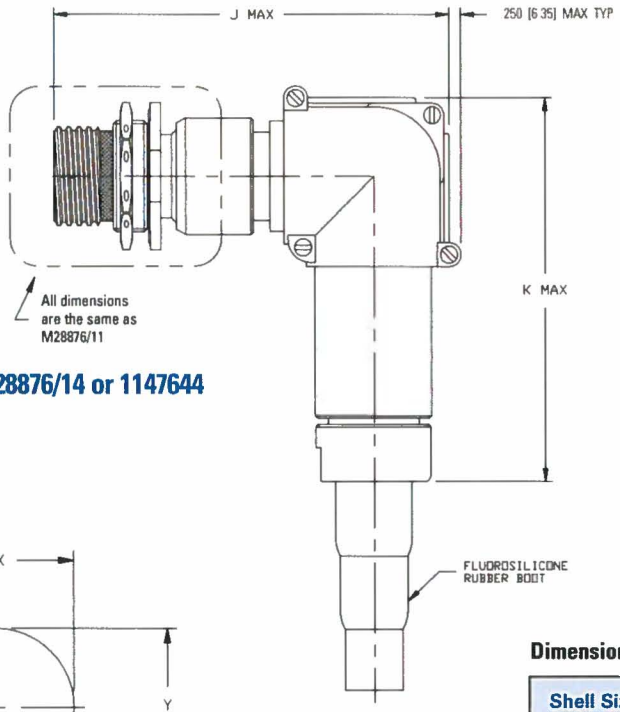

M28876/14 or 1147644

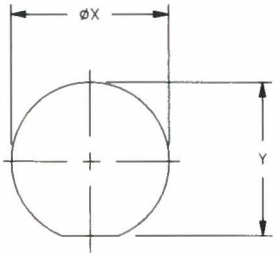

Recommended Panel Cutout (Jam Nut Mounting)

Dimension Table Panel Cutout, Jam Nut Receptacles

Shell Size	ØX ±.005 [0.13]	Y ±.005 [0.13]
11	.885 [22.48]	.848 [21.54]
13	1.010 [25.65]	.973 [24.71]
15	1.198 [30.43]	1.160 [29.46]
23	1.635 [41.53]	1.598 [40.59]

Dimensions shown are for reference only. Unless otherwise specified, dimensions are in inches and [millimeters].

Dust Covers

MIL-SPEC Ordering Nomenclature

M28876/10 – C C W

MIL-SPEC Slash Number
See Table I

Shell Size Designator
See Table II

Material and Finish Designator
See Table IV

Attachment Designator
See Table III

Table I		
Connector Type	**MIL-SPEC Slash Number Part Number**	**Commercial Equivalent**
Plug	**M28876/10**	4565071
Receptacle	**M28876/15**	4565070

Table II	
Shell Size Designator	**Shell Size**
A	11
B	13
C	15
F	23

Table III	
Attachment Designator	**Attachment**
C	Wire Rope with Fastener
D	Wire Rope with Ring
E	Without Wire Rope

Table IV	
Material and Finish Designator	**Material and Finish**
W	Aluminum with finish per MIL-C-28876

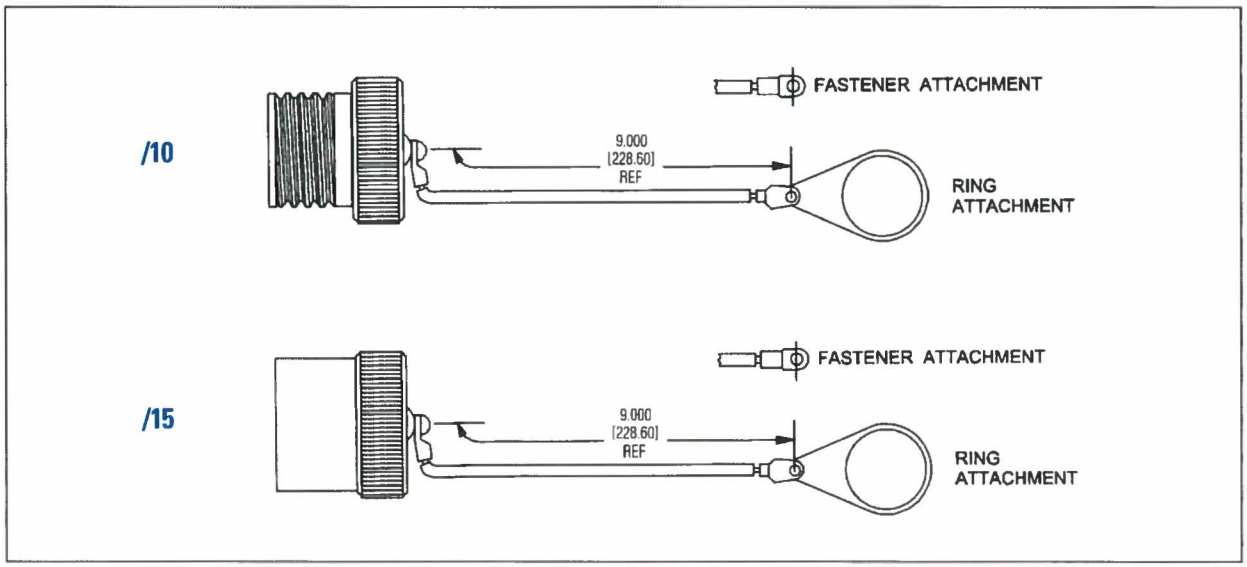

Dimensions shown are for reference only. Unless otherwise specified, dimensions are in inches and [millimeters].

Dust Covers

Commercial Equivalent Ordering Nomenclature

4565071 – C C W S

- **Commercial Part Number** See Table I
- **Shell Size Designator** See Table II
- **Attachment Designator** See Table III
- **Material and Finish Designator** See Table IV
- **Sales Designator** See Table I

Table I			
Connector Type	**Commercial Part Number**	**Sales Designator**	**MIL-SPEC Equivalent Slash Number**
Plug	**4565071**	**S**	M28876/10
Receptacle	**4565070**	**S**	M28876/15

Table II	
Shell Size Designator	**Shell Size**
A	11
B	13
C	15
F	23

Table III	
Attachment Designator	**Attachment**
C	Wire Rope with Fastener
D	Wire Rope with Ring
E	Without Wire Rope

Table IV		
Material and Finish Designator	**Material**	**Finish**
W	Aluminum	Per MIL-C-28876

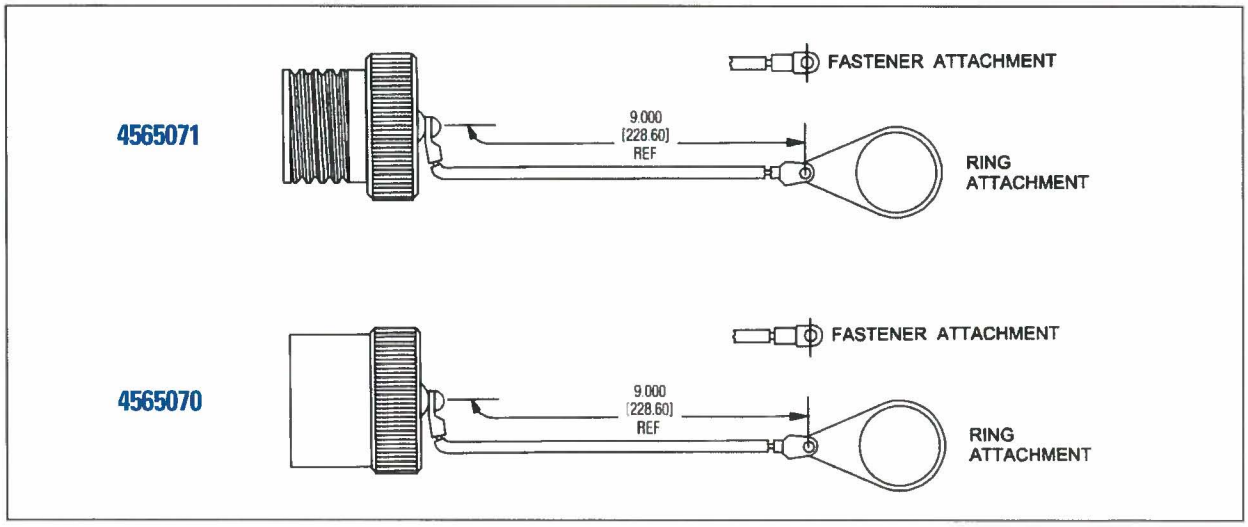

Dimensions shown are for reference only. Unless otherwise specified, dimensions are in inches and [millimeters].

Insert Arrangements

Shell Sizes

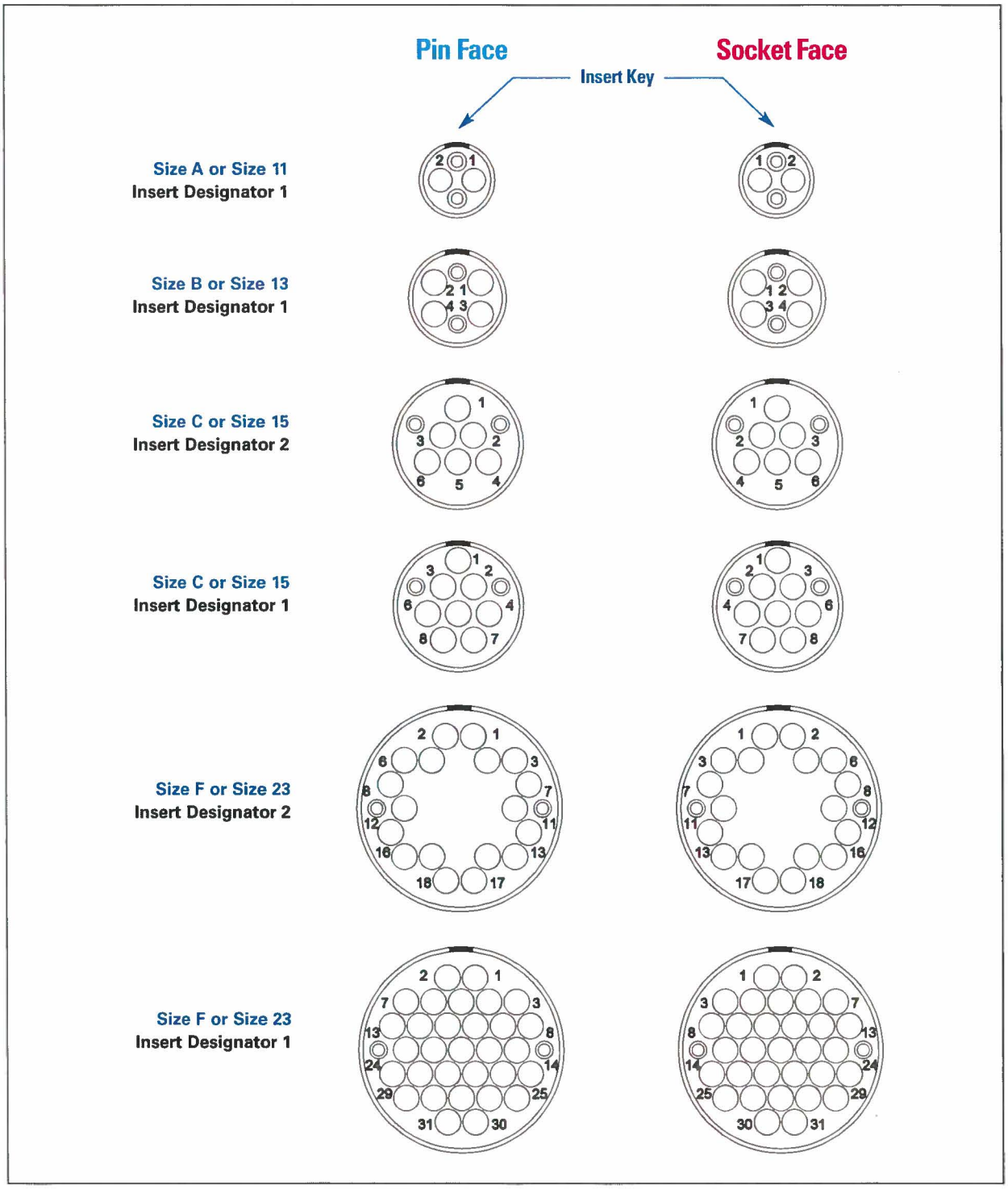

Keying Arrangements

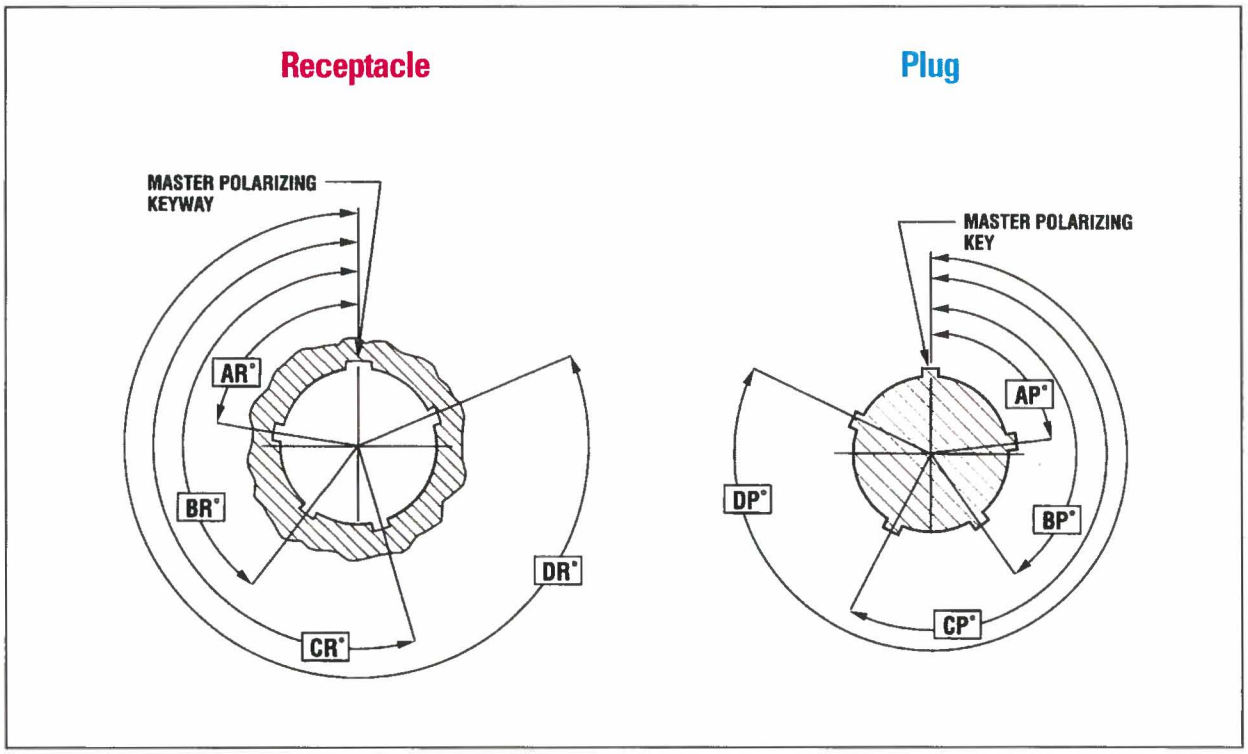

Shell Size	Keying Arrangement Designators	AR° or AP°	BR° or BP°	CR° or CP°	DR° or DP°
11 and 13	0*	–	–	–	–
	1	95	141	208	236
	2	113	156	182	292
	3	90	145	195	252
	4	53	156	220	255
	5	119	146	176	298
	6	51	141	184	242
15 and 23	0*	–	–	–	–
	1	80	142	196	293
	2	135	170	200	310
	3	49	169	200	244
	4	66	140	200	257
	5	62	145	180	280
	6	79	153	197	272

** 0 indicates universal keying arrangement and is available on commercial equivalent connector only.*

Fiber Optic Product Families

Product Catalogs Available

Connector Families	Benefits/ Features	Applications/ Markets	Materials & Latching Mechanism
Termini 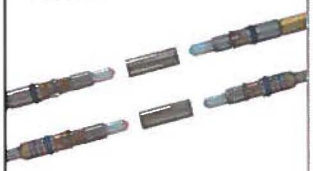	■ 16 gauge termini ■ Fiber sizes: Singlemode – 6/125, 9/125 Multimode – 50/125, 62.5/125, 100/140 ■ Free floating, self-aligning design ■ Individual seal and retaining clip ■ Qualified to MIL-T-29504 specification (commercial equivalent available)	■ Military/Aerospace ■ Shipboard/Pierside ■ Harsh environment ■ Broadcast ■ Telecom/Datacom ■ Hybrid electronics	■ Stainless steel with ceramic alignment system ■ Rear-insertion/ front-release
M28876	■ Channels: 2, 4, 6, 8, 18 and 31 ■ Shell sizes: 11, 13, 15 and 23 ■ Utilizes field proven Delphi termini ■ Singlemode and multimode capability ■ In-line and wall mount receptacles ■ Full environmental sealing ■ Field maintainable ■ Point-to-point interconnect system ■ Qualified to MIL-C-28876 specification (commercial equivalent available) ■ Hybrid configurations for electro-optical signal transmission	■ Navy shipboard ■ Military and commercial	■ Per MIL-C-28876 specification ■ Threaded coupling
Hermaphroditic	■ Channels: 4, 6 and 12 ■ Utilizes field proven Delphi termini ■ Singlemode and multimode capability ■ Full environmental sealing ■ Field maintainable ■ Plug-to-plug in-line cable linking system ■ Compliant with SMPTE Standard 358M-2001 (4 channel)	■ Broadcast ■ Military pierside and tactical field usage ■ Petroleum field exploration ■ Field deployed equipment	■ Aluminum ■ Composite ■ Threaded coupling
Edgecard	■ Channels: multiple configurations ■ Utilizes field proven Delphi termini ■ Singlemode and multimode capability ■ Field maintainable ■ VME circuit board PO position connector available ■ Hybrid configurations for electro-optical signal transmission	■ Printed circuit board ■ Edgeboard (backplane) mount ■ Avionics ■ Satellites ■ Shipboard ■ Tight packaging areas	■ Aluminum ■ Stainless steel ■ Blind-mating ■ Jackscrew
Snap Lock	■ Single channel ■ Utilizes field proven Delphi termini ■ Singlemode and multimode capability ■ In-line plug ■ In-line and panel mount receptacles ■ Easy connect/disconnect ■ Compact	■ Anywhere single channel connectors are typically used	■ Aluminum ■ Push/pull collet coupling

Factory Support

DELPHI

With a company history that includes Hughes Connecting Devices Division and more recently Packard-Hughes Interconnect, Delphi Connection Systems offers more than 40 years of technology and expertise in the military and commercial connector markets.

Delphi Connection Systems provides complete interconnect assembly solutions tested in accordance with applicable performance criteria. For additional product information or application support, please contact your local Delphi Connection Systems' sales representative or contact us directly at **[1] 949.660.5701** or visit our website at **www.delphi.com/connect**.

Distribution Support

KITCO fiber optics

- Connectors
- Termini
- Tools
- Training

KITCO Fiber Optics
5269 Cleveland Street
Virginia Beach, Virginia 23462
U.S.A.
Tel: [1] 757.518.8100
Fax: [1] 757.518.9700

www.kitcofo.com

Koehlke Components, Inc.

- Connectors
- Termini
- Tools

Koehlke Components, Inc.
1201 Commerce Center Blvd.
Franklin, Ohio 45005
U.S.A.
Tel: [1] 937.435.5435
Fax: [1] 937.435.1894

www.koehlke.com

Military Products
17150 Von Karman Avenue
Irvine, California 92614
U.S.A.
Tel: [1] 949.660.5701
Fax: [1] 949.660.5825

Commercial and Medical Products
19200 Asheville Highway
P.O. Box 519
Landrum, South Carolina
U.S.A.
Tel: [1] 864.457.3824
Fax: [1] 864.457.2535

Automotive and Transportation Products
M/C 483.400.301
5725 Delphi Drive
Troy, Michigan 48098-2815
U.S.A.
Tel: [1] 248.813.2334
Fax: [1] 248.813.2333

Asia Pacific Regional Headquarters
31F Nomura-Buiru
1-26-2 Nishi-Shinjuku, Shinjuku
Tokyo, Japan 163-0569
Tel: [81] 3.5381.1700
Fax: [81] 3.5381.1824

European Regional Headquarters
Customer Technology Center
Vorm Eichholz 1
42119 Wuppertal
Germany
Tel: [49] 202.291.0
Fax: [49] 202.291.2777

South American Regional Headquarters
Av. Goiás, 1860
São Caetano do Sul
São Paulo 09550-050
Brazil
Tel: [55] 11.4234.9491
Fax: [55] 11.4234.9462

DELPHI

Driving Tomorrow's Technology

www.delphi.com/connect

Printed on Recycled Paper ©2003 Delphi. All rights reserved. DP-02-E-038 102/5mGbs • 802 • 1102 • 204/5mGbs

About Delphi: Multi-national Delphi conducts its business operations through various subsidiaries and has headquarters in Troy, Michigan, USA, Paris, Tokyo and São Paulo, Brazil.

MIL-C-28840 Circular Connectors

DELPHI

A high density, harsh environment connector designed to meet the most demanding environmental conditions and RFI/EMI shielding requirements. Delphi Connection Systems delivers high quality, high reliability and high density connectors that you have come to rely on.

MIL-C-28840 Shock Resisting Circular Connectors

Military, commercial, and industrial electronics systems benefit from Delphi Connection Systems' harsh environment circular connector. The connector provides:

- High contact density (without a decrease in contact spacing)
- Scoop-proof aluminum shells designed for maximum protection
- Threaded couplings
- Five-key polarization options
- Fluorosilicone rubber sealing provides fluid immersion protection
- Cadmium over nickel shell finishes for maximum corrosion resistance
- Resistance to MIL-S-901 shock testing

The MIL-C-28840 miniature circular connector offers a variety of features and benefits including a unique retention system. This system provides a retention clip on the contact to offer maximum economy and improved field serviceability.

Delphi's M28840 connectors are available in a wide range of backshells and strain reliefs for increased versatility with each application.

Contents

Characteristics, Benefits, Features and Applications 3

M28840 General Information – Ratings, Materials and Finishes . 4

Ordering Nomenclatures 5

Size 20 Contacts 7

Tools 7

Insert Arrangements / Keyway . . 8

Drawings and Dimensions
- Receptacles 10
- Plugs 14
- Mounting Dimensions 21
- Cable Range Dimensions . . 22

Factory/Distribution Support . . . 23

Key Words:

COTS . . . . . Commercial-Off-The-Shelf

MIL-SPEC . . Military Specification

MIL-STD . . . Military Standard

Exclusive Features

The MIL-C-28840 circular connectors offer improved reliability and service life with:

- Enhanced RFI/EMI shielding with special no-gap grounding fingers
- Advanced moisture sealing with four wire glands instead of three
- Greater insert retention with mechanical/bonded system

Typical Applications

Delphi Connection Systems' shock resisting circular connectors are designed for military, commercial and industrial applications. Typical applications include:

- Military and commercial shipboard systems
- Ground support equipment
- Test equipment
- Airborne systems
- Guidance control systems (missiles and space)

M28840 General Information

Contact Performance Data

Size Gauge	20 AWG [0.5 mm²]	
Separation Forces (After Conditioning)	0.6 oz. min. [17 g]	
Engagement Forces (After Conditioning)	22 oz. max. [624 g]	
Current Rating: Wire Gauge	20 AWG [0.5 mm²]	7.5 amps
	22 AWG [0.35 mm²]	5.0 amps
	24 AWG [0.22 mm²]	3.0 amps
	26 AWG [0.13 mm²]	2.0 amps
	28 AWG [0.08 mm²]	1.5 amps
Voltage Drop	55 mv max.	

Contact/Connector Performance Data

Contact Retention	20 lbs. min.
Mating Durability	500 cycles
Dielectric Strength:	
Sea Level	1000 VAC RMS
Altitude: 70,000 ft. [21,336 m]	375 VAC RMS
Thermal Shock (Operating Temperature)	-55°C to +200°C (-67°F to +392°F)
Insulation Resistance at 500 VDC	5000 MΩ min.
Corrosion Resistance	500 hour salt spray tested per MIL-STD-1344, method 1001
Shock Resistance	High impact tested per MIL-S-901, grade A

Materials

Inserts	Glass-filled epoxy, color black
Seals	Fluorosilicone elastomers
Shells, Coupling Rings and Jam Nuts	Aluminum alloy per QQ-A-225/8 or /10 and stainless steel, Class 316, per QQ-S-763

Finishes

Shells	Aluminum:	Olive drab cad plate per QQ-P-416, Type II, Class 3 over electroless nickel
	Stainless Steel:	Cad plate per QQ-P-416, Type II, Class 3, dyed black

MIL-SPEC Ordering Nomenclature

M28840 /26 C 2 G 1 D A P 1

Connector Series
MIL-C-28840

Polarization Key Position
Number **"1"** thru **"6"**

Assembly Configuration

Slash Sheet Number	Connector Type	Cable Clamp Backshell Type
/10	Wall Mount Receptacle	None
/11	Cable-Conn Receptacle	None
/12	Box Mount Receptacle	None
/20	Wall Mount Recp./10	Straight Backshell /6
/14	Jam Nut Receptacle	None
/21	Cable-Conn Recp./11	Straight Backshell /6
/16	Straight Plug	None
/17	Straight Plug /16	Straight, Open Wire Clamp /1
/26	Straight Plug /16	Straight Backshell /6
/18	Straight Plug /16	90° Open Wire Cable Clamp /2
/28	Straight Plug /16	90° Sealed Backshell /8
/19	Straight Plug /16	45° Open Wire Cable Clamp /3
/29	Straight Plug /16	45° Sealed Backshell /9

Contact Type and Crimp Barrel Size

P	Pin	20-22
S	Socket	20-22
D	Pin	20-28
E	Socket	20-28

Backshell Style
A* EMI/Environmental
B* Environmental Only
**Omit if no backshell*

Backshell Adapter Size
– No letter denotes no backshell
A, B, C, D Per Applicable Slash Sheet of MIL-C-28840

Insert Arrangement
MIL-C-28840 Designator Number = 1

(Shell Size)	(Contacts)
A	7
B	12
C	21
D	31
E	42
F	64
G	92
H	121
J	155

Class Code (Shell Material Finish With or Without Backshell)

Code Letter	Class Per MIL-C-28840	Shell Material	Shell Finish	With Backshell
A	D	Wrought Aluminum Alloy	Olive Drab Cad over Nickel	No
C	DJ	Wrought Aluminum Alloy	Olive Drab Cad over Nickel	Yes

Shell Size

MIL-C-28840 Designator Number	Shell Size Number	MIL-C-28840 Designator Number	Shell Size Number
A	11	**F**	23
B	13	**G**	25
C	15	**H**	29
D	17	**J**	33
E	19		

/12 Box Mount Options (See page 12)
1 = Figure 1
2 = Figure 2

Commercial Equivalent (COTS) Ordering Nomenclature

GT 6 E 25 A 092 P 1 XXX

Connector Series

GT Olive Drab
Cadmium Plated
Aluminum Alloy

GS Black
Cadmium Plated
Stainless Steel

Shell Style

0 Wall Mount Receptacle
1 Cable Connecting Receptacle
2 Box Mount Receptacle (Figure 1, Page 12)
4 Jam Nut Receptacle
6 Straight Plug
22 Box Mount Receptacle (Figure 2, Page 12)

Class

A No Strain Relief or Backshell
B Straight Strain Relief
C 90° Strain Relief
D 45° Strain Relief
E Straight Environmental Backshell
F Straight EMI/Environmental Backshell
G 90° Environmental Backshell
H 90° EMI/Environmental Backshell
J 45° Environmental Backshell
K 45° EMI/Environmental Backshell

Shell Size

11	**23**
13	**25**
15	**29**
17	**33**
19	

Modifications

Consult Factory for Available Options.
Omit for Standard.

Shell Polarization

See Key/Keyway Polarization Chart, Page 9

Connector and Contact Type

P	Pin	20-22
S	Socket	20-22
D	Pin	20-28
E	Socket	20-28
F	Pin	20-20
G	Socket	20-20

Insert Arrangement

Number of Contacts	Shell Size
007	11
012	13
021	15
031	17
042	19
064	23
092	25
121	29
155	33

Cable Range Designator

(Cable Entry Dimension)

A Classes B, C, D
(See Table I, Page 22)

A, B, C or D Classes E, G, J
(See Table II, Page 22)

– Class A (No Strain Relief or Backshell)

Size 20 Contacts

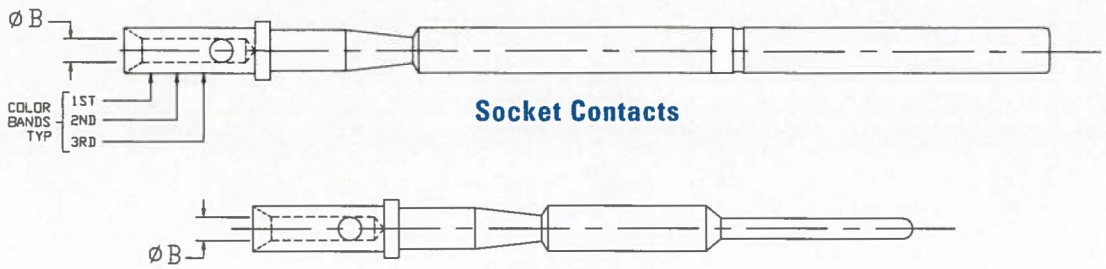

Socket Contacts

Pin Contacts

Ordering Nomenclature

Contact Type	Military Part Number	DCS Part Number	Bin Code Number	Color Bands 1st	Color Bands 2nd	Color Bands 3rd	Mating End Size	Wire Barrel Size	B Dia. ± .0010
Pin	M39029/83-508	GTP2020AS	508	Green	Black	Grey	20	20	.0490
Socket	M39029/84-509	GTS2020AS	509	Green	Black	White	20	20	
Pin	M39029/83-450	GTP2022AS	450	Yellow	Green	Black	20	22	.0345
Socket	M39029/84-452	GTS2022AS	452	Yellow	Green	Red	20	22	
Pin	M39029/83-451	GTP2028AS	451	Yellow	Green	Brown	20	28	.0190
Socket	M39029/84-453	GTS2028AS	453	Yellow	Green	Orange	20	28	

Sealing Plug

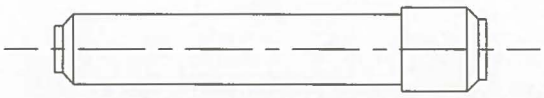

Sealing Plug

Ordering Nomenclature

Military Part Number	Color Code	Contact Size
MS 27488	Red	20

Tools

Tools are available from Koehlke Components, Inc.
(See page 23)

Crimping Tool
Tool: M22520/34-01
Locator Stop: M22520/34-02

Insertion Tools
TGT20IS (Straight)
TGT20IO (Offset)

Removal Tool
TGT20R

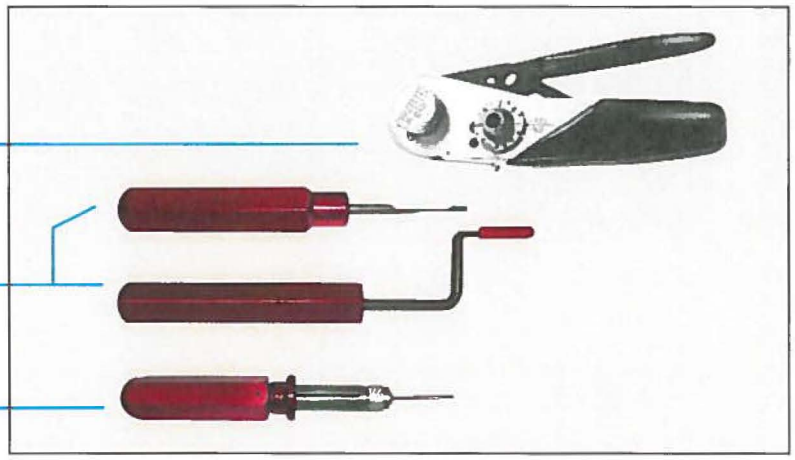

Dimensions shown are for reference only.

Insert Arrangements

Pin Body – Face View

11-7
7 No. 20 Contacts

13-12
12 No. 20 Contacts

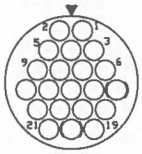

15-21
21 No. 20 Contacts

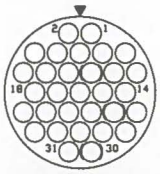

17-31
31 No. 20 Contacts

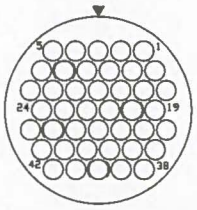

19-42
42 No. 20 Contacts

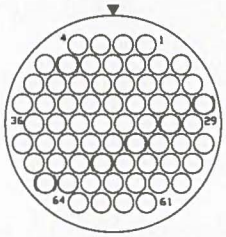

23-64
64 No. 20 Contacts

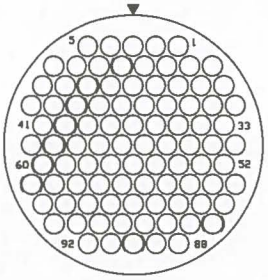

25-92
92 No. 20 Contacts

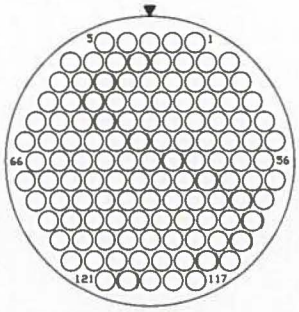

29-121
121 No. 20 Contacts

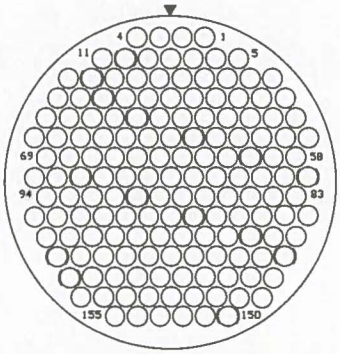

33-155
155 No. 20 Contacts

Socket Body – Face View

11-7
7 No. 20 Contacts

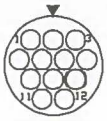

13-12
12 No. 20 Contacts

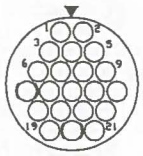

15-21
21 No. 20 Contacts

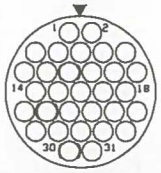

17-31
31 No. 20 Contacts

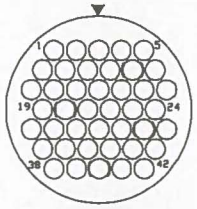

19-42
42 No. 20 Contacts

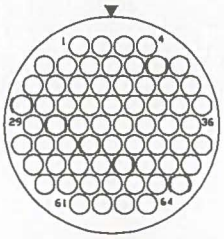

23-64
64 No. 20 Contacts

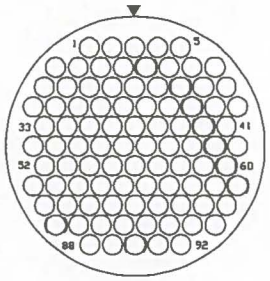

25-92
92 No. 20 Contacts

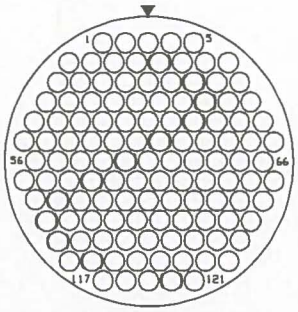

29-121
121 No. 20 Contacts

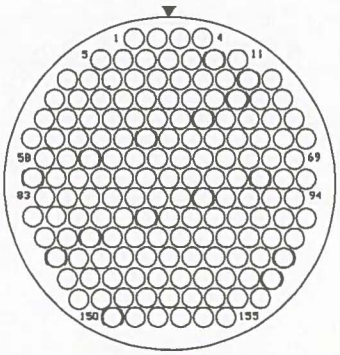

33-155
155 No. 20 Contacts

Key / Keyway Polarization Chart

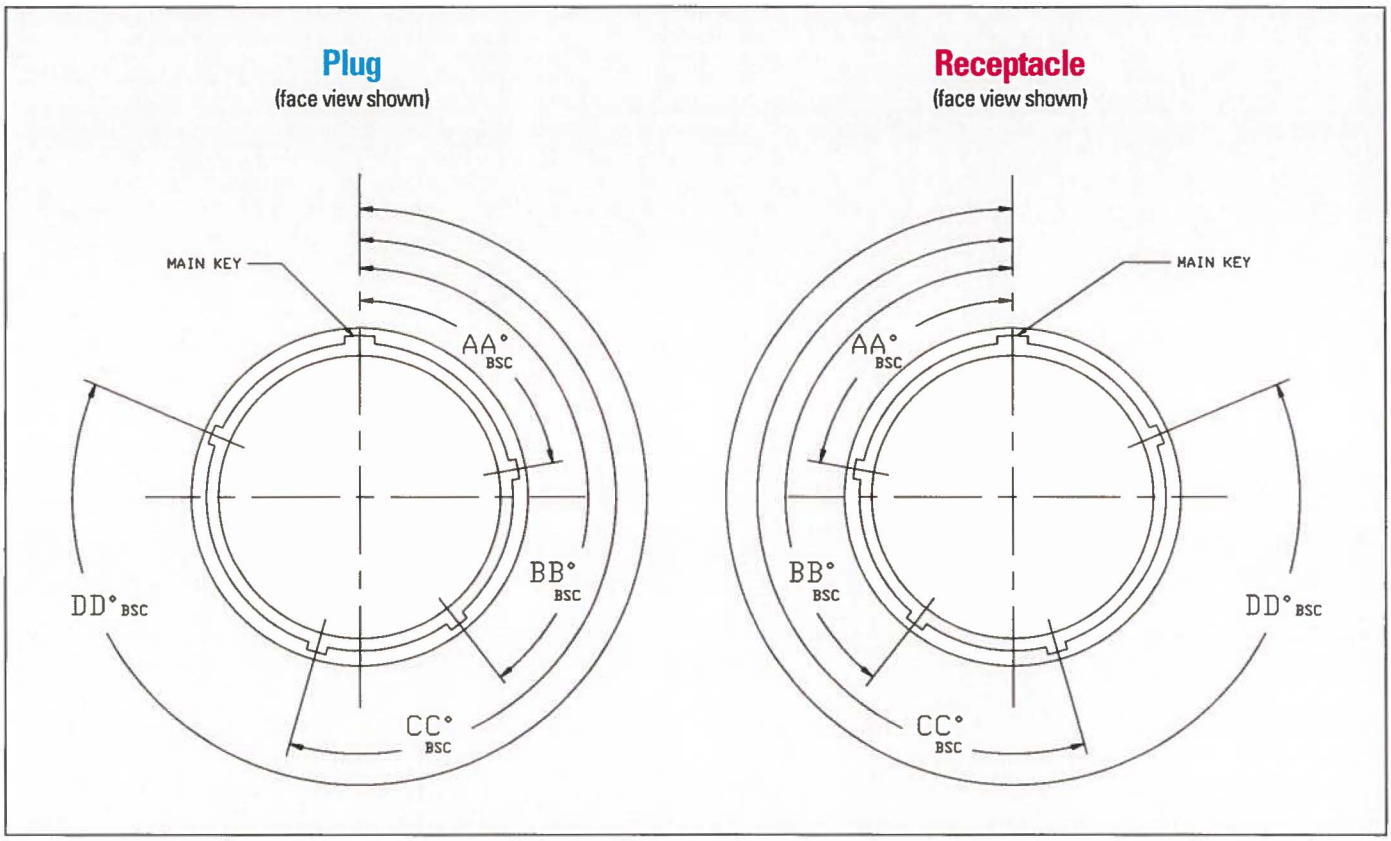

Shell Size	Keyway Arrangement Number	AA° BSC	BB° BSC	CC° BSC	DD° BSC
11 and 13	1	95	141	208	236
	2	113	156	182	292
	3	90	145	195	252
	4	53	156	220	255
	5	119	146	176	298
	6	51	141	184	242
15, 17, 19, 23 25, 29 and 30	1	80	142	196	293
	2	135	170	200	310
	3	49	169	200	244
	4	66	140	200	257
	5	62	145	180	280
	6	79	153	197	272

Receptacle – Wall Mount
Shell Style 0

M28840/10
GT0A

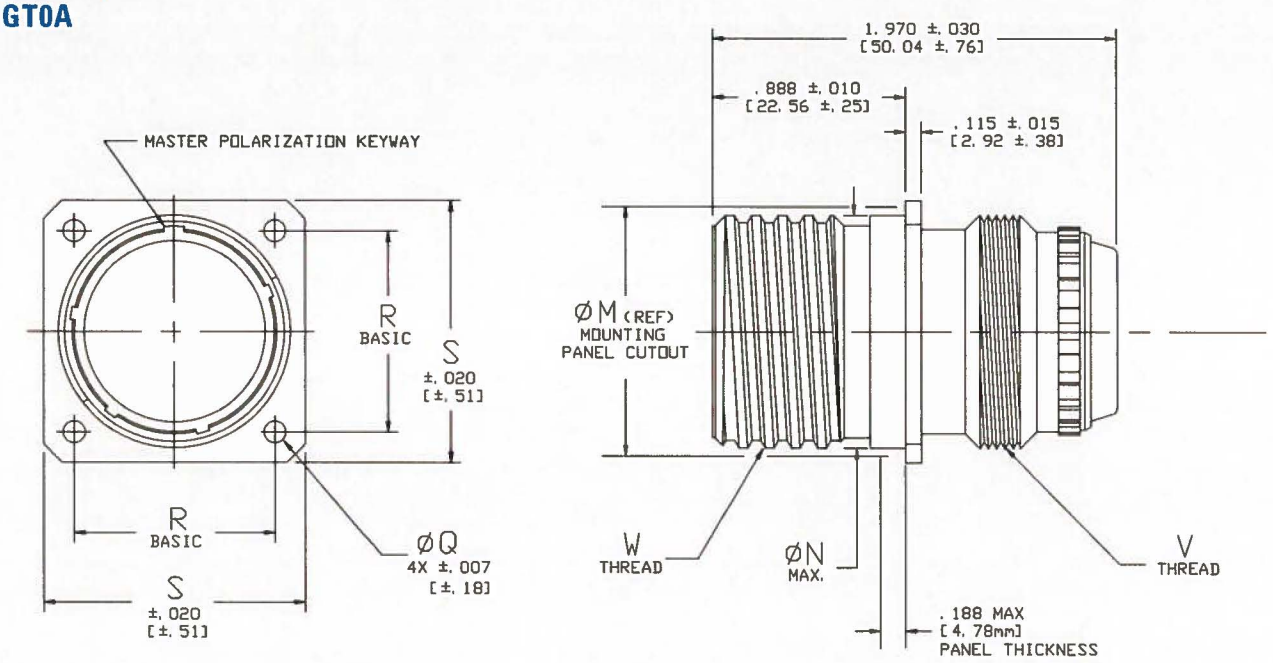

Shell Size	M Dia. (Ref.) Panel Cutout ID		N Dia. Max.		Q Dia. ± .007 [± 0.18]		R Basic		S ± .020 [± 0.51]		V Thread Class 2A	W Thread Class 2A
	in.	mm	in.	mm	in.	mm	in.	mm	in.	mm		
11	.812	20.62	.750	19.05	.123	3.12	.750	19.05	1.023	25.98	.7500-20-UNEF	.750-.1P-.2L-D.S.
13	.937	23.80	.875	22.22	.123	3.12	.843	21.41	1.138	28.91	.8750-20-UNEF	.875-.1P-.2L-D.S.
15	1.124	28.55	1.062	26.97	.123	3.12	.968	24.59	1.258	31.95	1.0000-20-UNEF	1.062-.1P-.2L-D.S.
17	1.187	30.15	1.125	28.58	.123	3.12	1.015	25.78	1.383	35.13	1.1250-18-UNEF	1.125-.1P-.2L-D.S.
19	1.374	34.90	1.312	33.32	.123	3.12	1.140	28.96	1.508	38.30	1.2500-18-UNEF	1.312-.1P-.2L-D.S.
23	1.562	39.67	1.500	38.10	.123	3.12	1.281	32.54	1.718	43.64	1.4375-18-UNEF	1.500-.1P-.2L-D.S.
25	1.687	42.85	1.625	41.27	.150	3.81	1.392	35.36	1.818	46.18	1.5625-18-UNEF	1.625-.1P-.2L-D.S.
29	1.937	49.20	1.812	46.02	.150	3.81	1.568	39.82	2.138	54.31	1.8750-16-UN	1.812-.1P-.2L-D.S.
33	2.124	53.95	2.000	50.80	.175	4.45	1.734	44.04	2.328	59.13	2.0625-16-UN	2.000-.1P-.2L-D.S.

Dimensions shown are for reference only. Unless otherwise specified, dimensions are in inches and [millimeters].

Receptacle – Cable Connecting Shell Style 1

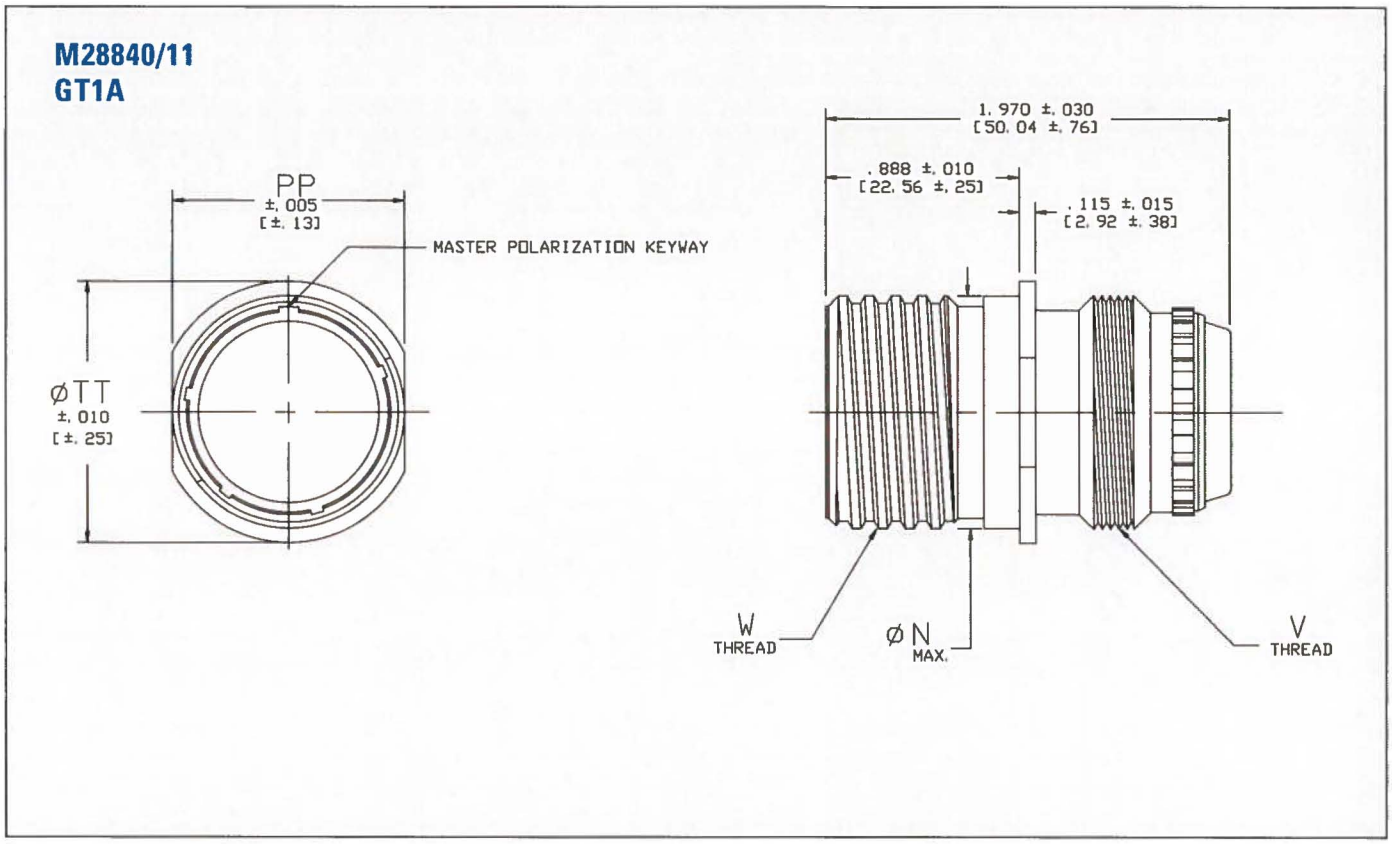

Shell Size	N Dia. Max.		PP ± .005 [± 0.13]		TT Dia. ± .010 [± 0.25]		V Thread Class 2A	W Thread Class 2A
	in.	mm	in.	mm	in.	mm		
11	.750	19.05	.763	19.38	.953	24.21	.7500-20-UNEF	.750-.1P-.2L-D.S.
13	.875	22.22	.888	22.55	1.078	27.38	.8750-20-UNEF	.875-.1P-.2L-D.S.
15	1.062	26.97	1.075	27.30	1.265	32.13	1.0000-20-UNEF	1.062-.1P-.2L-D.S.
17	1.125	28.58	1.138	28.91	1.328	33.73	1.1250-18-UNEF	1.125-.1P-.2L-D.S.
19	1.312	33.32	1.325	33.66	1.515	38.48	1.2500-18-UNEF	1.312-.1P-.2L-D.S.
23	1.500	38.10	1.513	38.43	1.703	43.26	1.4375-18-UNEF	1.500-.1P-.2L-D.S.
25	1.625	41.27	1.638	41.61	1.828	46.43	1.5625-18-UNEF	1.625-.1P-.2L-D.S.
29	1.812	46.02	1.888	47.96	2.078	52.78	1.8750-16-UN	1.812-.1P-.2L-D.S.
33	2.000	50.80	2.075	52.71	2.265	57.53	2.0625-16-UN	2.000-.1P-.2L-D.S.

Dimensions shown are for reference only. Unless otherwise specified, dimensions are in inches and [millimeters].

Receptacle – Box Mounting

Shell Styles 2 & 22

M28840/12
GT2A

Figure 1
Style 2

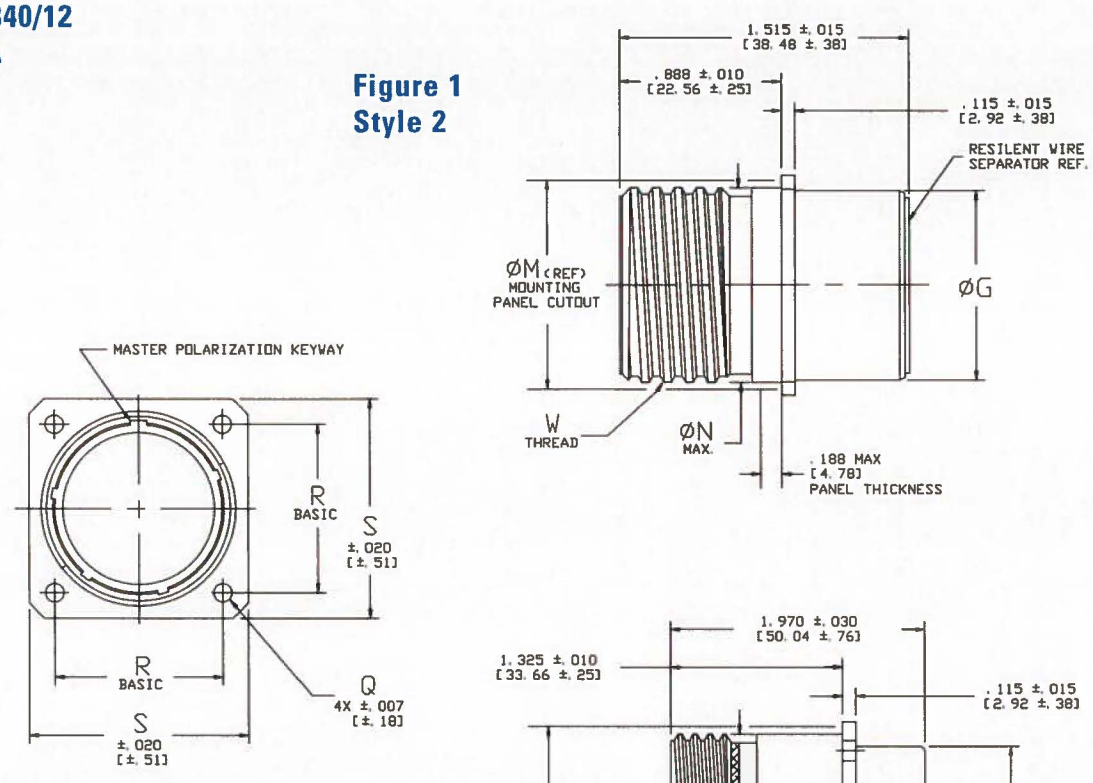

Figure 2
Style 22

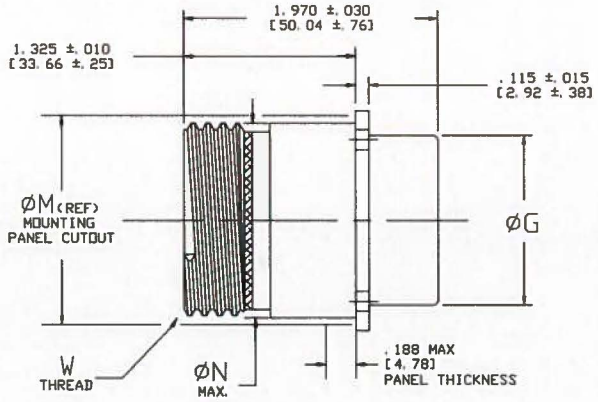

Shell Size	G Dia. ± .007 [± 0.18]		M Dia. (Ref.)* Panel Cutout ID		N Dia. Max.		Q Dia. ± .007 [± 0.18]		R Basic		S ± .020 [± 0.51]		W Thread Class 2A
	in.	mm	in.	mm	in.	mm	in.	mm	in.	mm	in.	mm	
11	.574	14.58	.812	20.62	.750	19.05	.123	3.12	.750	19.05	1.023	25.98	.750-.1P-.2L-D.S.
13	.696	17.68	.937	23.80	.875	22.22	.123	3.12	.843	21.41	1.138	28.91	.875-.1P-.2L-D.S.
15	.874	22.20	1.124	28.55	1.062	26.97	.123	3.12	.968	24.59	1.258	31.95	1.062-.1P-.2L-D.S.
17	.951	24.16	1.187	30.15	1.125	28.58	.123	3.12	1.015	25.78	1.383	35.13	1.125-.1P-.2L-D.S.
19	1.095	27.81	1.374	34.90	1.312	33.32	.123	3.12	1.140	28.96	1.508	38.30	1.312-.1P-.2L-D.S.
23	1.280	32.51	1.562	39.67	1.500	38.10	.123	3.12	1.281	32.54	1.718	43.64	1.500-.1P-.2L-D.S.
25	1.469	37.31	1.687	42.85	1.625	41.27	.150	3.81	1.392	35.36	1.818	46.18	1.625-.1P-.2L-D.S.
29	1.619	41.12	1.874	47.60	1.812	46.02	.150	3.81	1.568	39.82	2.138	54.31	1.812-.1P-.2L-D.S.
33	1.817	46.15	2.062	52.37	2.000	50.80	.175	4.45	1.734	44.04	2.328	59.13	2.000-.1P-.2L-D.S.

** Also refer to Wall Mount/Box Mount illustration and table on page 21.*

Dimensions shown are for reference only. Unless otherwise specified, dimensions are in inches and [millimeters].

Receptacle – Jam Nut Mounting
Shell Style 4

M28840/14
GT4A

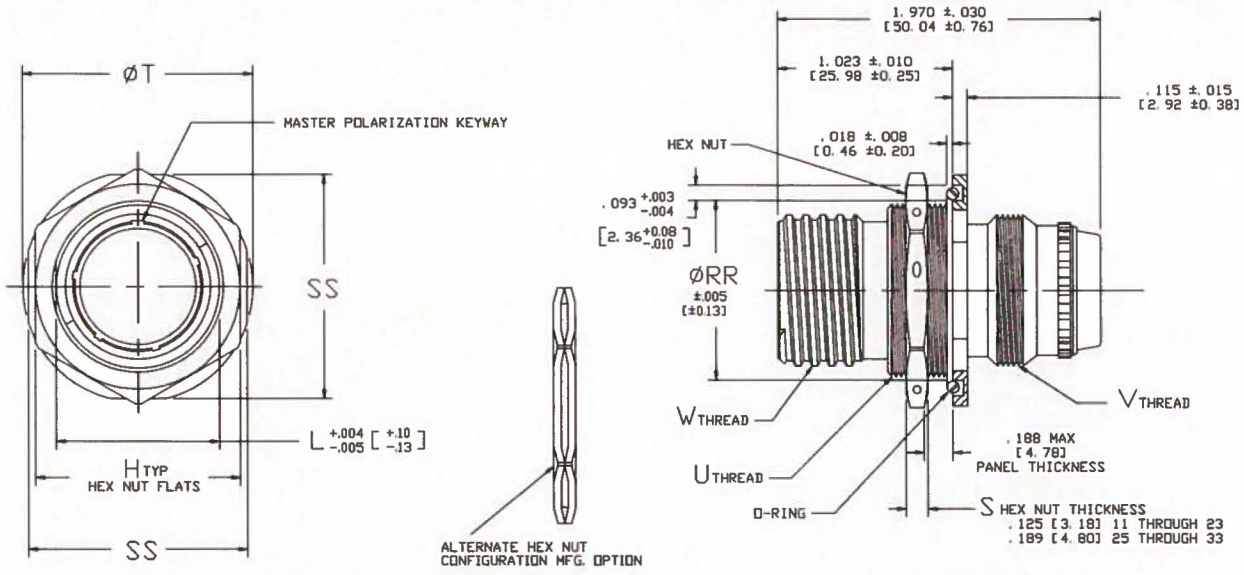

Shell Size	H Typ. ± .010 [± 0.25]		L +.004 -.005 [+0.10 -0.13]		M Dia.* Panel Cutout ID		N* ±.005 [±.13] Panel Cutout Flat		RR Dia. ±.005 [±0.13]		SS ± .010 [±0.25]		T Dia. ± .010 [±0.25]		U Thread Class 2A	V Thread Class 2A	W Thread Class 2A
	in.	mm	in.	mm	in.	mm	in.	mm	in.	mm	in.	mm	in.	mm			
11	1.062	26.97	.837	21.26	.885	22.48	.848	21.54	.974	24.74	1.264	32.10	1.358	34.49	.8750-20 UNEF	.7500-20 UNEF	.750-.1P-.2L-D.S.
13	1.188	30.18	.962	24.43	1.010	25.65	.973	24.71	1.099	27.91	1.389	35.28	1.498	38.05	1.0000-20 UNEF	.8750-20 UNEF	.875-.1P-.2L-D.S.
15	1.375	34.93	1.149	29.18	1.198	30.43	1.160	29.46	1.287	32.69	1.577	40.05	1.671	42.44	1.1875-18 UNEF	1.0000-20 UNEF	1.062-.1P-.2L-D.S.
17	1.438	36.53	1.212	30.78	1.260	32.00	1.223	31.06	1.349	34.26	1.639	41.63	1.733	44.02	1.2500-18 UNEF	1.1250-18 UNEF	1.125-.1P-.2L-D.S.
19	1.625	41.27	1.399	35.53	1.448	36.78	1.410	35.81	1.537	39.04	1.827	46.41	1.921	48.79	1.4375-18 UNEF	1.2500-18 UNEF	1.312-.1P-.2L-D.S.
23	1.812	46.02	1.587	40.31	1.635	41.53	1.598	40.59	1.724	43.79	2.014	51.15	2.108	53.54	1.6250-18 UNEF	1.4375-18 UNEF	1.500-.1P-.2L-D.S.
25	2.000	50.80	1.712	43.48	1.760	44.70	1.723	43.76	1.849	46.96	2.139	54.33	2.233	56.72	1.7500-18 UNS	1.5625-18 UNEF	1.625-.1P-.2L-D.S.
29	2.188	55.57	1.899	48.23	1.948	49.48	1.910	48.51	2.037	51.74	2.327	59.10	2.425	61.60	1.9375-16 UN	1.8750-16 UN	1.812-.1P-.2L-D.S.
33	2.375	60.32	2.087	53.01	2.135	54.23	2.098	53.29	2.224	56.49	2.514	63.85	2.608	66.24	2.1250-16 UN	2.0625-16 UN	2.000-.1P-.2L-D.S.

** Also refer to Jam Nut illustration and table on page 21.*

Dimensions shown are for reference only. Unless otherwise specified, dimensions are in inches and [millimeters].

Plug

Shell Style 6

M28840/16
GT6A

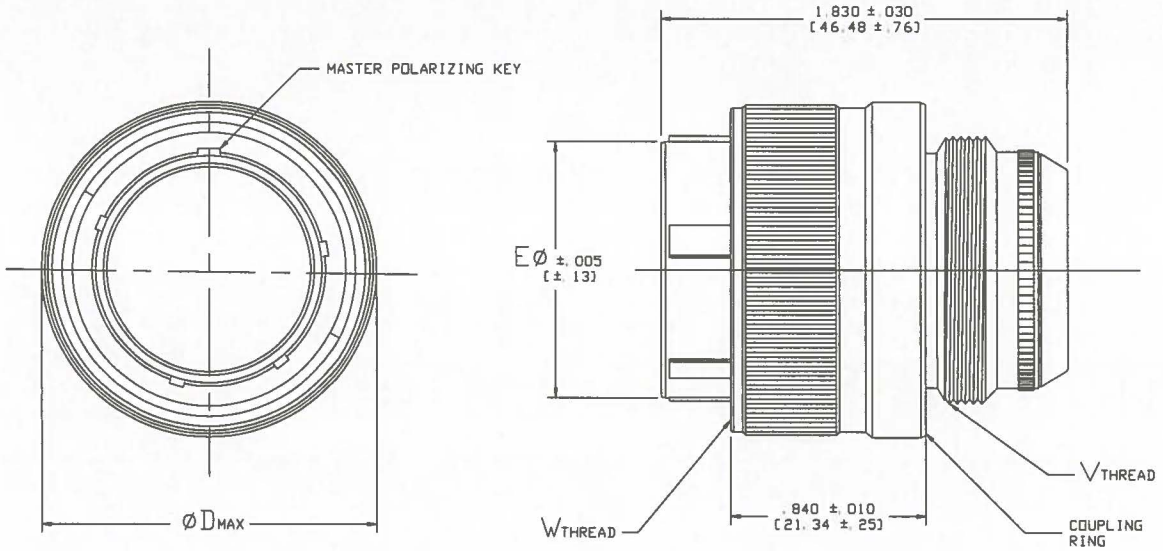

Shell Size	D Dia. Max.		E ± .005 [± 0.13]		V Thread Class 2A	W Thread Class 2B
	in.	mm	in.	mm		
11	1.028	26.11	.497	12.62	.7500-20 UNEF	.750-.1P-.2L-D.S.
13	1.141	28.98	.621	15.77	.8750-20 UNEF	.875-.1P-.2L-D.S.
15	1.263	32.08	.793	20.14	1.0000-20 UNEF	1.062-.1P-.2L-D.S.
17	1.387	35.23	.863	21.92	1.1250-18 UNEF	1.125-.1P-.2L-D.S.
19	1.513	38.43	1.030	26.16	1.2500-18 UNEF	1.312-.1P-.2L-D.S.
23	1.703	43.26	1.215	30.86	1.4375-18 UNEF	1.500-.1P-.2L-D.S.
25	1.825	46.35	1.376	34.95	1.5625-18 UNEF	1.625-.1P-.2L-D.S.
29	2.143	54.43	1.542	39.17	1.8750-16 UN	1.812-.1P-.2L-D.S.
33	2.329	59.16	1.734	44.04	2.0625-16 UN	2.000-.1P-.2L-D.S.

Dimensions shown are for reference only. Unless otherwise specified, dimensions are in inches and [millimeters].

Plug

Straight Strain Relief Class B

M28840/17
GT6B

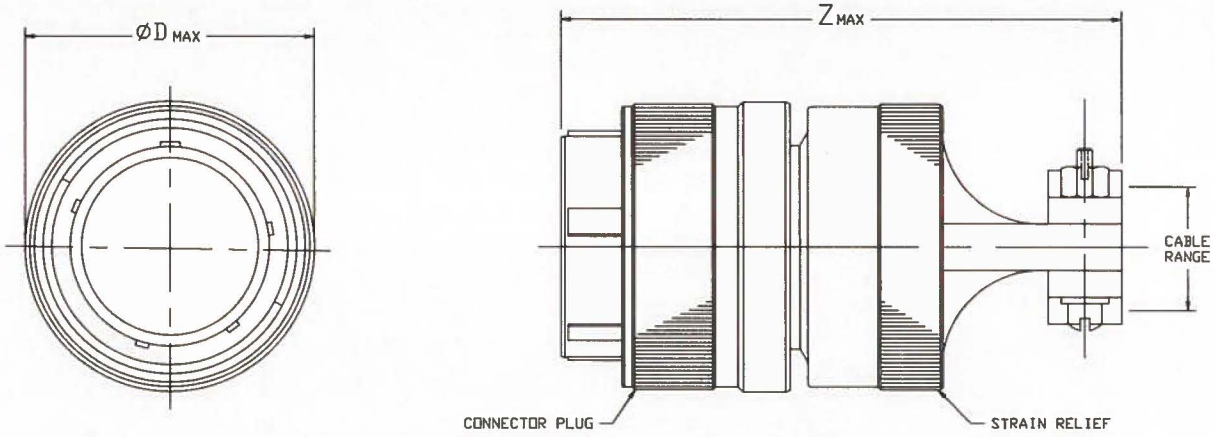

Shell Size	Cable Range Designator See Table I, Page 22	D Dia. Max.		Z Max.		Max. OD Over Rear Clamps	
		in.	mm	in.	mm	in.	mm
11	A	1.028	26.11	2.438	61.92	.832	21.13
13	A	1.141	28.98	2.438	61.92	.832	21.13
15	A	1.263	32.08	2.438	61.92	.989	25.12
17	A	1.387	35.23	2.688	68.27	1.094	27.79
19	A	1.513	38.43	2.812	71.42	1.319	33.50
23	A	1.703	43.26	2.938	74.62	1.557	39.55
25	A	1.825	46.35	3.062	77.77	1.653	41.99
29	A	2.143	54.43	3.188	80.97	1.819	46.20
33	A	2.329	59.16	3.375	85.72	2.020	51.31

Plug

90° Strain Relief Class C

M28840/18
GT6C

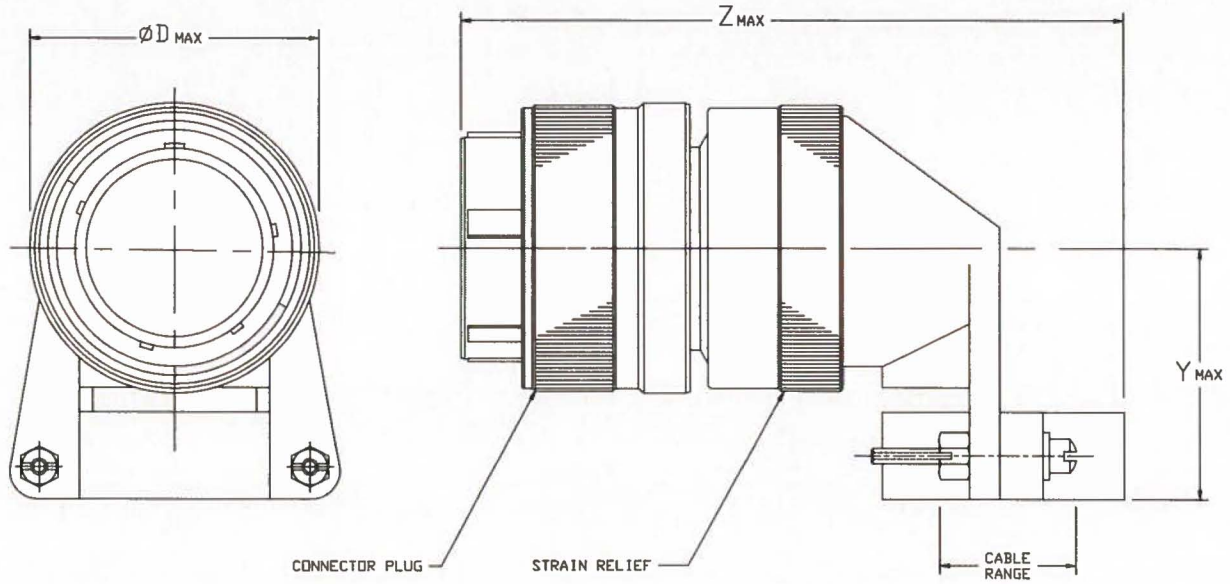

Shell Size	Cable Range Designator See Table I, Page 22	D Dia. Max.		Y Max.		Z Max.		Max. OD Over Rear Clamps	
		in.	mm	in.	mm	in.	mm	in.	mm
11	A	1.028	26.11	.929	23.60	2.562	65.07	.832	21.13
13	A	1.141	28.98	.929	23.60	2.562	65.07	.832	21.13
15	A	1.263	32.08	1.056	26.82	2.750	69.85	.989	25.12
17	A	1.387	35.23	1.233	31.32	2.875	73.02	1.094	27.79
19	A	1.513	38.43	1.296	32.92	3.000	76.20	1.319	33.50
23	A	1.703	43.26	1.358	34.50	3.125	79.37	1.557	39.55
25	A	1.825	46.35	1.420	36.07	3.250	82.55	1.653	41.99
29	A	2.143	54.43	1.634	41.50	3.375	85.72	1.819	46.20
33	A	2.329	59.16	1.859	47.22	3.438	87.32	2.020	51.31

Plug

45° Strain Relief Class D

M28840/19
GT6D

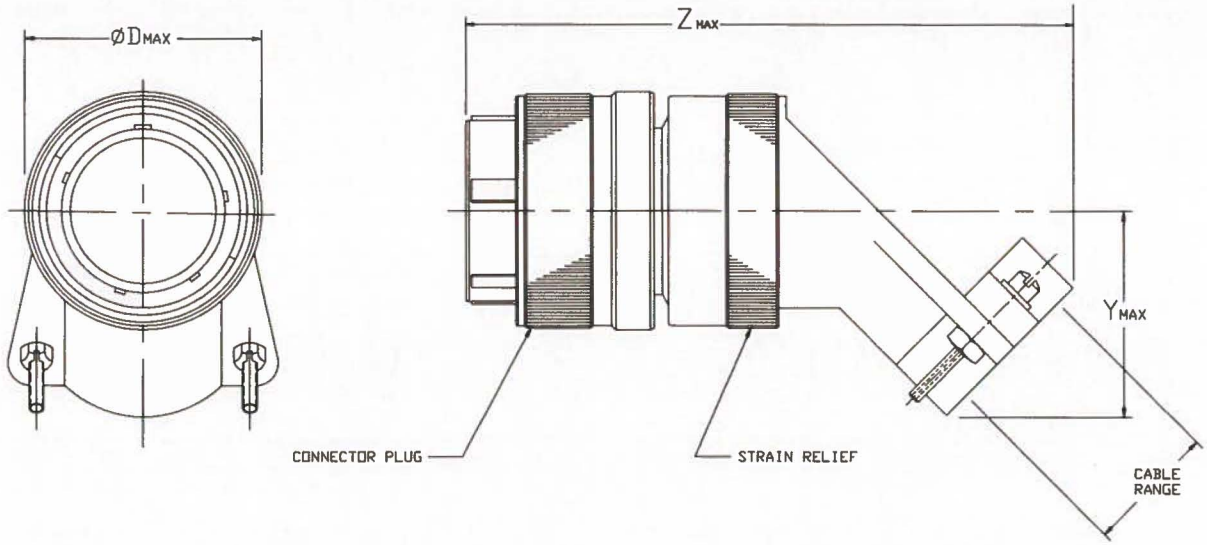

Shell Size	Cable Range Designator See Table I, Page 22	D Dia. Max.		Y Max.		Z Max.		Max. OD Over Rear Clamps	
		in.	mm	in.	mm	in.	mm	in.	mm
11	A	1.028	26.11	.928	23.57	3.125	79.37	.832	21.13
13	A	1.141	28.98	.928	23.57	3.125	79.37	.832	21.13
15	A	1.263	32.08	.991	25.17	3.250	82.55	.989	25.12
17	A	1.387	35.23	1.110	28.19	3.312	84.12	1.046	26.57
19	A	1.513	38.43	1.172	29.77	3.375	85.72	1.319	33.50
23	A	1.703	43.26	1.235	31.37	3.438	87.32	1.557	39.55
25	A	1.825	46.35	1.297	32.94	3.500	88.90	1.653	41.99
29	A	2.143	54.43	1.543	39.19	3.750	95.25	1.819	46.20
33	A	2.329	59.16	1.668	42.37	3.875	98.42	2.020	51.31

Plug
Straight Environmental
Backshell – Class E & F

M28840/26
GT6E
GT6F

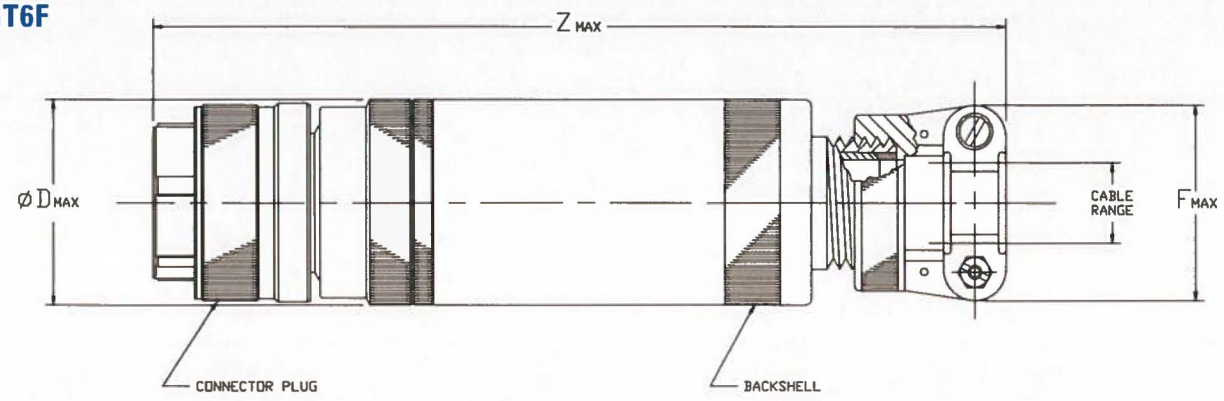

Class E = Straight Environmental Backshell
Class F = Straight Environmental / EMI Backshell

Shell Size	Cable Range Designator See Table II, Page 22	D Dia. Max.		F Max.		Z Max.	
		in.	mm	in.	mm	in.	mm
11	A	1.156	29.36	.938	23.83	6.500	165.10
	B	1.156	29.36	1.125	28.57	6.500	165.10
	C	1.281	32.54	1.312	33.32	6.500	165.10
13	A	1.156	29.36	1.125	28.57	6.500	165.10
	B	1.281	32.54	1.312	33.32	6.500	165.10
	C	1.406	35.71	1.312	33.32	7.000	177.80
15	A	1.281	32.54	1.125	28.57	6.500	165.10
	B	1.281	32.54	1.312	33.32	6.500	165.10
	C	1.406	35.71	1.312	33.32	7.000	177.80
	D	1.406	35.71	1.593	40.46	7.000	177.80
17	A	1.406	35.71	1.312	33.32	7.000	177.80
	B	1.406	35.71	1.593	40.46	7.000	177.80
	C	1.406	35.71	1.593	40.46	7.000	177.80
19	A	1.531	38.89	1.312	33.32	7.000	177.80
	B	1.531	38.89	1.750	44.45	7.000	177.80
23	A	1.656	42.06	1.593	40.46	7.500	190.50
	B	1.656	42.06	1.750	44.45	7.625	193.67
	C	1.656	42.06	2.093	53.16	7.812	198.42
25	A	1.781	45.24	1.750	44.45	7.625	193.67
	B	1.781	45.24	2.093	53.16	8.312	211.12
	C	1.781	45.24	2.093	53.16	8.312	211.12
	D	2.156	54.76	2.343	59.51	8.312	211.12
29	A	2.156	54.76	2.093	53.16	8.312	211.12
	B	2.156	54.76	2.343	59.51	8.312	211.12
33	A	2.281	57.94	2.343	59.51	8.312	211.12
	B	2.281	57.94	2.750	69.85	8.625	219.07

Plug

90° Environmental Backshell

– Class G & H

M28840/28
GT6G
GT6H

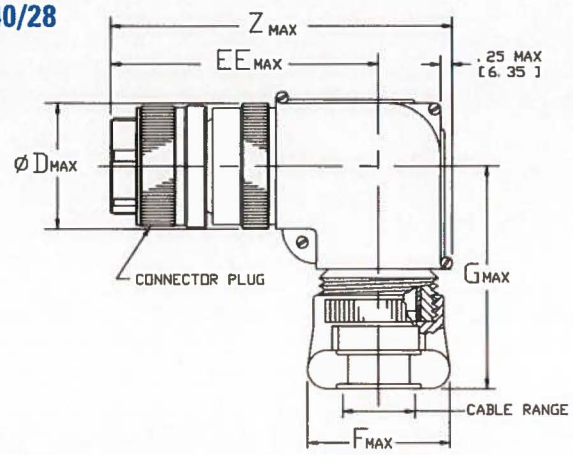

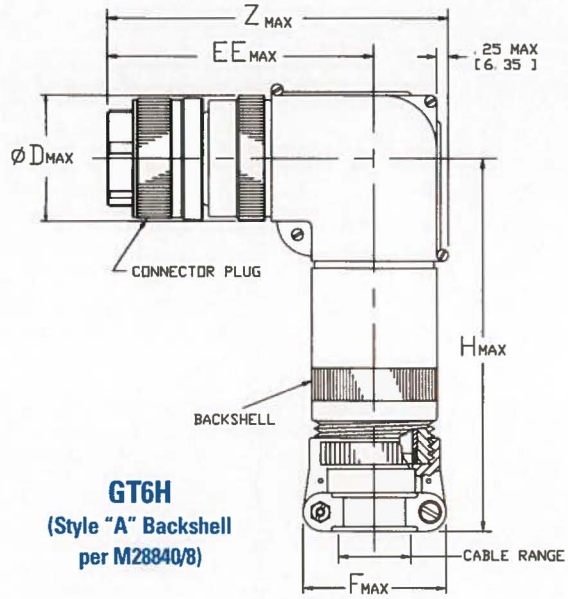

Class G = 90° Environmental Backshell

Class H = 90° Environmental / EMI Backshell

GT6G
(Style "B" Backshell per M28840/8)

GT6H
(Style "A" Backshell per M28840/8)

Shell Size	Cable Range Designator See Table II, Page 22	D Dia. Max.		F Max.		Z Max.		EE Max.		G Max.		H Max.	
		in.	mm	in.	mm	in.	mm	in.	mm	in.	mm	in.	mm
11	A	1.031	26.19	.938	23.83	3.812	96.82	3.250	82.55	2.962	75.23	5.332	135.43
	B	1.031	26.19	1.125	28.57	3.812	96.82	3.250	82.55	2.962	75.23	5.332	135.43
	C	1.281	32.54	1.312	33.32	4.000	101.60	3.375	85.72	3.087	78.41	5.457	138.61
13	A	1.031	26.19	1.125	28.57	3.812	96.82	3.250	82.55	2.962	75.23	5.332	135.43
	B	1.281	32.54	1.312	33.32	4.000	101.60	3.375	85.72	3.087	78.41	5.457	138.61
	C	1.531	38.89	1.312	33.32	4.250	107.95	3.500	88.90	3.312	84.12	5.682	144.32
15	A	1.281	32.54	1.125	28.57	4.000	101.60	3.375	85.72	3.087	78.41	5.457	138.61
	B	1.281	32.54	1.312	33.32	4.000	101.60	3.375	85.72	3.087	78.41	5.457	138.61
	C	1.531	38.89	1.312	33.32	4.250	107.95	3.500	88.90	3.312	84.12	5.682	144.32
	D	1.531	38.89	1.593	40.46	4.250	107.95	3.500	88.90	3.343	84.91	5.713	145.11
17	A	1.531	38.89	1.312	33.32	4.250	107.95	3.500	88.90	3.312	84.12	5.682	144.32
	B	1.531	38.89	1.593	40.46	4.250	107.95	3.500	88.90	3.343	84.91	5.713	145.11
	C	1.531	38.89	1.750	44.45	4.639	117.83	3.556	90.32	3.437	87.30	5.807	147.50
19	A	1.531	38.89	1.312	33.32	4.250	107.95	3.500	88.90	3.312	84.12	5.682	144.32
	B	1.781	45.24	1.750	44.45	4.375	111.12	3.625	92.07	3.462	87.93	5.832	148.13
23	A	1.781	45.24	1.593	40.46	4.500	114.30	3.625	92.07	3.368	85.55	5.738	145.75
	B	1.781	45.24	1.750	44.45	4.500	114.30	3.625	92.07	3.462	87.93	5.832	148.13
	C	1.781	45.24	2.093	53.16	4.688	119.08	3.625	92.07	3.649	92.68	6.019	152.88
25	A	1.781	45.24	1.750	44.45	4.500	114.30	3.625	92.07	3.462	87.93	5.832	148.13
	B	1.781	45.24	2.093	53.16	4.688	119.08	3.625	92.07	3.649	92.68	6.019	152.88
	C	2.031	51.59	2.093	53.16	4.688	119.08	3.750	95.25	3.774	95.86	6.144	156.06
	D	2.031	51.59	2.343	59.51	4.938	125.42	3.750	95.25	3.806	96.67	6.176	156.87
29	A	2.031	51.59	2.093	53.16	4.812	122.22	3.750	95.25	3.774	95.86	6.144	156.06
	B	2.031	51.59	2.343	59.51	4.938	125.42	3.750	95.25	3.806	96.67	6.176	156.87
33	A	2.531	64.29	2.343	59.51	5.188	131.77	4.000	101.60	4.056	103.02	6.426	163.22
	B	2.531	64.29	2.750	69.85	5.375	136.52	4.000	101.60	4.331	110.01	6.701	170.21

Dimensions shown are for reference only. Unless otherwise specified, dimensions are in inches and [millimeters].

Plug

45° Environmental Backshell

– Class J & K

M28840/29
GT6J
GT6K

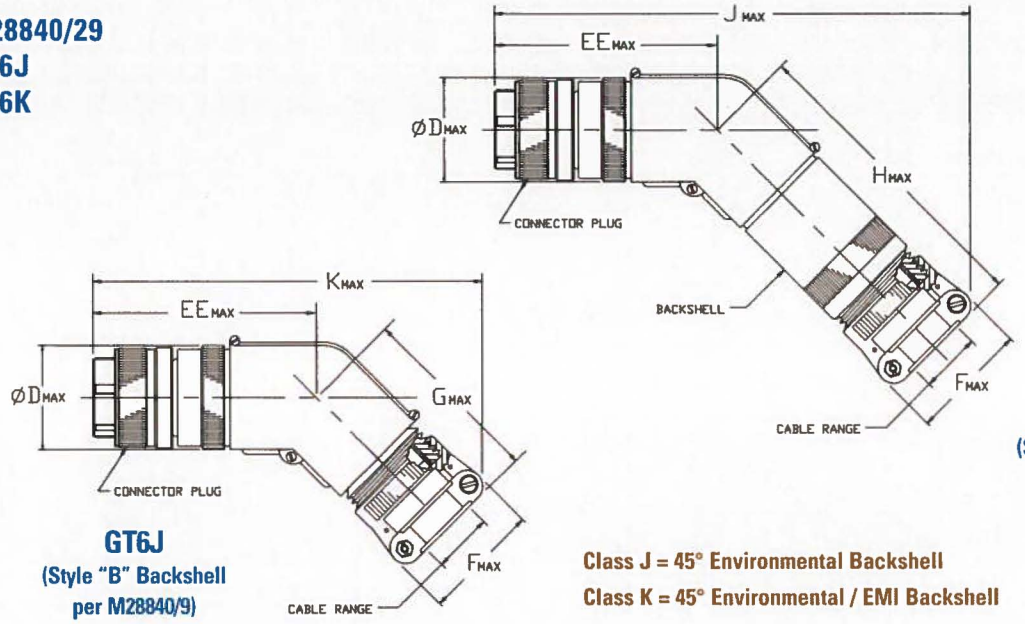

GT6K
(Style "A" Backshell per M28840/9)

GT6J
(Style "B" Backshell per M28840/9)

Class J = 45° Environmental Backshell
Class K = 45° Environmental / EMI Backshell

Shell Size	Cable Range Designator See Table II, Page 22	D Dia. Max. in.	D Dia. Max. mm	F Max. in.	F Max. mm	J Max. in.	J Max. mm	EE Max. in.	EE Max. mm	H Max. in.	H Max. mm	K Max. in.	K Max. mm	G Max. in.	G Max. mm
11	A	1.031	26.19	.938	23.83	7.404	188.06	3.250	82.55	5.432	137.97	5.728	145.49	3.062	77.77
	B	1.031	26.19	1.125	28.57	7.457	189.41	3.250	82.55	5.432	137.97	5.781	146.84	3.062	77.77
	C	1.281	32.54	1.312	33.32	7.727	196.27	3.375	85.72	5.557	141.15	6.051	153.70	3.187	80.95
13	A	1.031	26.19	1.125	28.57	7.457	189.41	3.250	82.55	5.432	137.97	5.781	146.84	3.062	77.77
	B	1.281	32.54	1.312	33.32	7.727	196.27	3.375	85.72	5.557	141.15	6.051	153.70	3.187	80.95
	C	1.531	38.89	1.312	33.32	7.938	201.63	3.500	88.90	5.682	144.32	6.262	159.05	3.312	84.12
15	A	1.281	32.54	1.125	28.57	7.671	194.84	3.375	85.72	5.557	141.15	5.895	149.73	3.187	80.95
	B	1.281	32.54	1.312	33.32	7.727	196.27	3.375	85.72	5.557	141.15	6.051	153.70	3.187	80.95
	C	1.531	38.89	1.312	33.32	7.938	201.63	3.500	88.90	5.682	144.32	6.262	159.05	3.312	84.12
	D	1.531	38.89	1.593	40.46	8.058	204.67	3.500	88.90	5.713	145.11	6.382	162.10	3.343	84.91
17	A	1.531	38.89	1.312	33.32	7.938	201.63	3.500	88.90	5.682	144.32	6.262	159.05	3.312	84.12
	B	1.531	38.89	1.593	40.46	8.058	204.67	3.500	88.90	5.713	145.11	6.382	162.10	3.343	84.91
	C	1.531	38.89	1.750	44.45	8.161	207.29	3.556	90.32	5.807	147.50	6.485	164.72	3.437	87.30
19	A	1.531	38.89	1.312	33.32	7.938	201.63	3.500	88.90	5.682	144.32	6.282	159.56	3.312	84.12
	B	1.781	45.24	1.750	44.45	8.371	212.62	3.625	92.07	5.932	150.67	6.695	170.05	3.562	90.47
23	A	1.781	45.24	1.593	40.46	8.272	210.11	3.625	92.07	5.838	148.28	6.596	167.54	3.468	88.09
	B	1.781	45.24	1.750	44.45	8.371	212.62	3.625	92.07	5.932	150.67	6.695	170.05	3.562	90.47
	C	1.781	45.24	2.093	53.16	8.628	219.15	3.625	92.07	6.119	155.42	6.952	176.58	3.749	95.22
25	A	1.781	45.24	1.750	44.45	8.371	212.62	3.625	92.07	5.932	150.67	6.695	170.05	3.562	90.47
	B	1.781	45.24	2.093	53.16	8.628	219.15	3.625	92.07	6.119	155.42	6.952	176.58	3.749	95.22
	C	2.031	51.59	2.093	53.16	8.841	224.56	3.750	95.25	6.244	158.60	7.165	181.99	3.874	98.40
	D	2.031	51.59	2.343	59.51	8.950	227.33	3.750	95.25	6.276	159.41	7.274	184.76	3.906	99.21
29	A	2.031	51.59	2.093	53.16	8.841	224.56	3.750	95.25	6.244	158.60	7.165	181.99	3.874	98.40
	B	2.031	51.59	2.343	59.51	8.950	227.33	3.750	95.25	6.276	159.41	7.274	184.76	3.906	99.21
33	A	2.531	64.29	2.343	59.51	9.377	238.18	4.000	101.60	6.526	165.76	7.701	195.61	4.156	105.56
	B	2.531	64.29	2.750	69.85	9.659	245.34	4.000	101.60	6.801	172.75	7.983	202.77	4.431	112.55

Receptacle
Wall Mount / Box Mount
Panel Cutout Dimensions

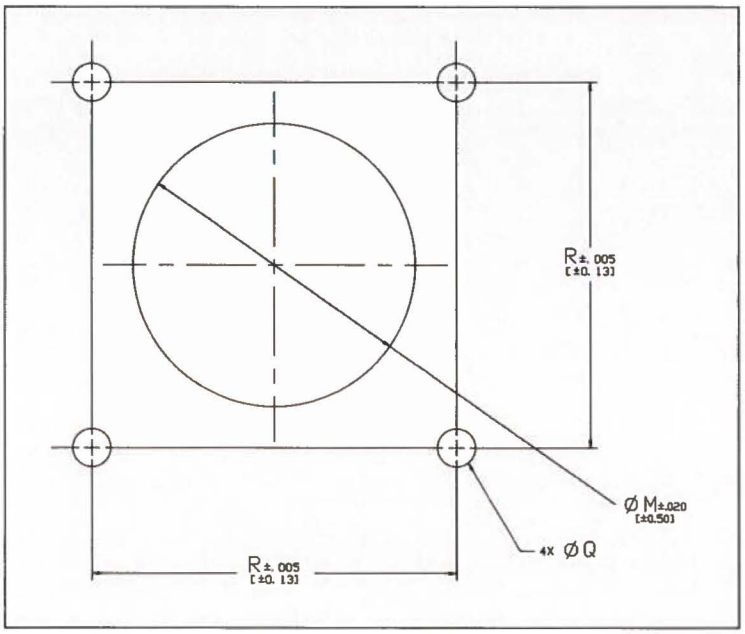

Shell Size	M ± .020 [±0.50]		R ± .005 Typ. [± 0.13]		Q Dia. thru +.010 -.005 [+0.25 -0.13]	
	in.	mm	in.	mm	in.	mm
11	.812	20.62	.750	19.05	.120	3.05
13	.937	23.80	.843	21.41	.120	3.05
15	1.124	28.55	.968	24.59	.120	3.05
17	1.187	30.15	1.015	25.78	.120	3.05
19	1.374	34.90	1.140	28.96	.120	3.05
23	1.562	39.67	1.281	32.54	.120	3.05
25	1.687	42.85	1.392	35.36	.147	3.73
29	1.874	47.60	1.568	39.83	.147	3.73
33	2.062	52.37	1.734	44.04	.173	4.39

Receptacle – Jam Nut
Panel Cutout Dimensions

Shell Size	M ± .005 [± 0.13]		N ± .005 [± 0.13]	
	in.	mm	in.	mm
11	.885	22.48	.848	21.54
13	1.010	25.65	.973	24.71
15	1.198	30.43	1.160	29.46
17	1.260	32.00	1.223	31.06
19	1.448	36.78	1.410	35.81
23	1.635	41.53	1.598	40.59
25	1.760	44.70	1.723	43.76
29	1.948	49.48	1.910	48.51
33	2.135	54.23	2.098	53.29

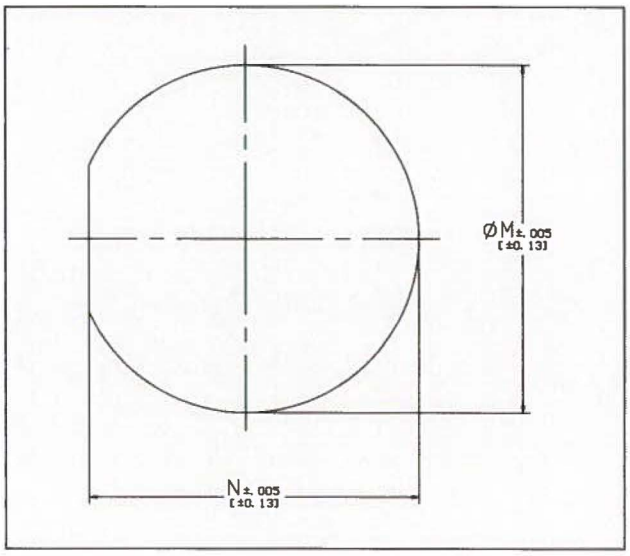

Dimensions shown are for reference only. Unless otherwise specified, dimensions are in inches and [millimeters]

Cable Range Dimensions
Strain Relief and Backshell Assemblies

Table I

To be used with
Classes B, C, and D Strain Relief
Assemblies

Shell Size	Cable Range Designator	Cable Entry Dimensions			
		Max.		Min.	
		in.	mm	in.	mm
11	A	.286	7.26	.177	4.50
13	A	.286	7.26	.177	4.50
15	A	.416	10.57	.250	6.35
17	A	.476	12.09	.291	7.39
19	A	.626	15.90	.348	8.84
23	A	.831	21.11	.429	10.90
25	A	.956	24.28	.523	13.28
29	A	1.081	27.46	.643	16.33
33	A	1.187	30.15	.704	17.88

Table II

To be used with
Classes E, F, G, H,
J and K
Backshell Assemblies

Shell Size	Cable Range Designator	Cable Entry Dimensions			
		Max.		Min.	
		in.	mm	in.	mm
11	A	.312	7.92	.188	4.77
	B	.438	11.13	.281	7.14
	C	.562	14.27	.344	8.74
13	B	.438	11.13	.281	7.14
	C	.562	14.27	.344	8.74
	D	.625	15.88	.375	9.53
15	A	.438	11.13	.281	7.14
	B	.562	14.27	.344	8.74
	C	.625	15.88	.375	9.53
	D	.750	19.05	.438	11.13
17	A	.625	15.88	.375	9.53
	B	.750	19.05	.438	11.13
	C	.938	23.83	.625	15.88
19	A	.625	15.88	.375	9.53
	B	.938	23.83	.625	15.88
23	A	.750	19.05	.438	11.13
	B	.938	23.83	.625	15.88
	C	1.188	30.18	.812	20.62
25	A	.938	23.83	.625	15.88
	B	1.188	30.18	.812	20.62
	C	1.250	31.75	.875	22.22
	D	1.380	35.05	1.000	25.40
29	A	1.188	30.18	.812	20.62
	B	1.380	35.05	1.000	25.40
33	A	1.380	35.05	1.000	25.40
	B	1.625	41.27	1.250	31.75

Factory Support

DELPHI

With a company history that includes Hughes Connecting Devices Division and more recently Packard-Hughes Interconnect, Delphi Connection Systems offers more than 40 years of technology and expertise in the military and commercial connector markets.

Delphi Connection Systems provides complete interconnect assembly solutions tested in accordance with applicable performance criteria. For additional product information or application support, please contact your local Delphi Connection Systems' sales representative or contact us directly at [1] 949.660.5701 or visit our website at www.delphi.com/connect.

Distribution Support

ASTREX
MAKE THE CONNECTION

- Electrical Connectors
- Accessories

Astrex, Inc.
205 Express Street
Plainview, New York 11803
U.S.A.
Tel: [1] 516.433.1700
Fax: [1] 516.433.1796

www.astrex.net

Koehlke Components, Inc.

- Electrical Connectors
- Accessories
- Tools

Koehlke Components, Inc.
1201 Commerce Center Blvd.
Franklin, Ohio 45005
U.S.A.
Tel: [1] 937.435.5435
Fax: [1] 937.435.1894

www.koehlke.com

ARROW ELECTRONICS, INC.

- Electrical Connectors
- Accessories

Arrow/Zeus Electronics
7459 South Lima Street
Englewood, Colorado 80112
U.S.A.
Tel: [1] 800.777.2776
Fax: [1] 303.824.7772

www.arrow.com

Military Products
17150 Von Karman Avenue
Irvine, California 92614 U.S.A.
Tel: [1] 949.660.5701
Fax: [1] 949.660.5825

Commercial and Medical Products
19200 Asheville Highway
P.O. Box 519
Landrum, South Carolina 29356 U.S.A.
Tel: [1] 864.457.3824
Fax: [1] 864.457.2535

Automotive and Transportation Products
Mail Code 483.400.301
5725 Delphi Drive
Troy, Michigan 48098-2815 U.S.A.
Tel: [1] 248.813.2334
Fax: [1] 248.813.2333

Asia Pacific Regional Headquarters
31F Nomura-Buiru
1-26-2 Nishi-Shinjuku, Shinjuku
Tokyo, Japan 163-0569
Tel: [81] 3.5381.1700
Fax: [81] 3.5381.1824

European Regional Headquarters
Customer Technology Center
Vorm Eichholz 1
42119 Wuppertal
Germany
Tel: [49] 202.291.0
Fax: [49] 202.291.2777

South American Regional Headquarters
Av. Goiás, 1860
São Caetano do Sul
São Paulo 09550-050
Brazil
Tel: [55] 11.4234.9491
Fax: [55] 11.4234.9462

DELPHI

Driving Tomorrow's Technology

www.delphi.com/connect

Delphi Connection Systems reserves the right to improve, enhance and modify the design specifications and construction of Delphi products without prior notification. For additional product and engineering information, contact us at [1] 248.813.2334 or visit our website at www.delphi.com/connect.

Printed on Recycled Paper ©2004 Delphi. All rights reserved. DP-04-E-114 1104/1M-CirEpi

About Delphi. Multi-national Delphi conducts its business operations through various subsidiaries and has headquarters in Troy, Michigan, USA, Paris, Tokyo and São Paulo, Brazil.