RECORD OF PUBLIC COMMENTS

PROPOSED RULEMAKING: *Revisions to the Export Administration Regulations (EAR): Control of Fire Control, Range Finder, Optical, and Guidance and Control Equipment the President Determines No Longer Warrant Control Under the United States Munitions List (USML)*

Published in the *Federal Register*, 80 Fed. Reg. 25798 (May 5, 2015)
Comments due July 6, 2015

	Source	Signer(s) of Comment	Date Received
1	Aerospace Industries Association	Remy Nathan	July 6, 2015
2	Anonymous 1	Anonymous	July 1, 2015
3	Anonymous 2	Anonymous	July 2, 2015
4	Anonymous 3	Anonymous	July 5, 2015
5	Anonymous 4	Anonymous	July 6, 2015
6	Anonymous 5	Anonymous	July 6, 2015
7	Armasight, Inc.	Amy Currie	July 6, 2015
8	Association of University Export Control Officers	Mary Beran	July 6, 2015
9	Autoliv Electronics Night Vision	Richard Seoane	July 2, 2015
10	BaySpec, Inc.	Eric Bergles	June 22, 2015
11	Boeing Company	Christopher Haave	July 6, 2015
12	Bristow Group Inc.	Miriam Eqab	July 6, 2015
13	Clear Align, LLC	Dr. Jonathan S. Kane	June 23, 2015
14	Coherent, Inc.	Kevin Sinclair	June 30, 2015
15	Computing Technology Industry Association	Ken Montgomery	July 6, 2015
16	Cordin Company, Inc.	Susan Palmer	July 1, 2015 July 6, 2015
17	DRS Technologies, Inc.	Gregory C. Hill	July 6, 2015
18	ePhysics, LLC	Frank Vallese	July 6, 2015
19	Exciting Technology, LLC	Paul McManamon	June 25, 2015
20	Fisba, LLC	Erick Koontz	July 1, 2015
21	FLIR Systems, Inc.	Steven J. Tribble	July 2, 2015
22	Fluke Corporation	Matthew Schmidt Jennifer Christy Slone Pearson	July 6, 2015
23	Forrest, William	William Forrest	May 12, 2015
24	Fraser Optics Defense	Robert F. Joyce Jr.	July 6, 2015
25	Google Inc.	Liana Sebastian	July 6, 2015
26	Government of Canada	Minister Gilles Gauthier	July 6, 2015
27	Harris Corporation	Mary C. Menz	July 3, 2015
28	International Society for Optics and Photonics	Eugene Arthurs	July 6, 2015

	Source	Signer(s) of Comment	Date Received
29	IRradiance Glass, Inc.	Jennifer McKinley	May 29, 2015
30	Lancaster, Matthew J.	Matthew J. Lancaster	May 27, 2015
31	Landry, Markita del Carpio	Dr. Markita del Carpio Landry	June 24, 2015
32	Massachusetts Institute of Technology	Maria T. Zuber	July 6, 2015
33	Max-Viz, Inc.	Jacquenette J. McIntire	July 6, 2015
34	Nufern	Anthony Rallo	July 6, 2015
35	ON Semiconductor	Daryl G. Hatano	July 6, 2015
36	The Optical Society	Elizabeth Rogan	July 6, 2015
37	Optimax Systems, Inc.	Rick Plympton	June 12, 2015
38	Princeton Infrared Technologies, Inc.	Dr. Martin H. Ettenberg	June 26, 2015
39	Princeton Instruments, Inc.	William E. Asher	July 2, 2015
40	Raytheon Company	Julia Court Ryan Karl Abendschein	July 6, 2015
41	Resonon, Inc.	Rand Swanson	June 22, 2015
42	Ricor	Frank Perry Shlomo Baruch	July 6, 2015
43	Robertson, William	William Robertson	July 6, 2015
44	Robeson, David	David Robeson	July 6, 2015
45	Root, William	Root, William	May 28, 2015
46	SCHOTT North America, Inc.	James Purcell	July 6, 2015
47	Seek Thermal, Inc.	William Parrish	July 6, 2015
48	Semiconductor Industry Association	Cynthia Johnson Mario R. Palacios	July 6, 2015
49	Sensors and Instrumentation Technical Advisory Committee	Steven J. Tribble	July 1, 2015
50	Sofradir EC, Inc.	Michelle Intiso	July 6, 2015
51	Sunpower Inc.	Tom Matros	July 6, 2015
52	Systron Donner Inertial	Dean Johnson	July 5, 2015
53	Toyota Motor Engineering & Manufacturing North America, Inc.	Corey Stewart	July 6, 2015
54	Umicore	Thomas R. McKelvey	July 6, 2015
55	United Technologies Corporation	Peter S. Jordan	July 6, 2015
56	University of California system	Wendy D. Streitz	July 6, 2015
57	Voxtel, Inc.	George Williams	June 18, 2015
58	Young, Eliot F.	Eliot F. Young, Sc.D.	July 6, 2015
59	Zhang, Xiang	Dr. Xiang Zhang	July 6, 2015
60	Zia, Rashid	Dr. Rashid Zia	July 6, 2015

AEROSPACE INDUSTRIES
ASSOCIATION

July 6, 2015

U.S. Department of Commerce
Bureau of Industry and Security
Regulatory Policy Division
1401 Constitution Ave NW
Room 2099B
Washington, D.C. 20230

U.S. Department of State
Bureau of Political-Military Affairs
Directorate of Defense Trade Controls
2401 E. St, NW
12th Floor, SA-1
Washington, DC 25022

ATTN: Kevin Wolf, Assistant Secretary for Export Administration, U.S. Department of Commerce
Ed Peartree, Director, Office of Defense Trade Controls Policy, U.S. Department of State

SUBJECT: ITAR Amendment – Category XII; RIN 0694-AF75

The Aerospace Industries Association (AIA) and our member companies welcome the opportunity to provide comment on the proposed revised rule for U.S. Munitions List (USML) Category XII (Fire control, range finder, optical and guidance and control equipment) of the International Traffic in Arms Regulations (ITAR) and the corresponding controls on the Commerce Control List (CCL) of the Export Administration Regulations. While our members are encouraged with the continued progress on the Export Control Reform (ECR) initiative, we have several concerns, highlighted below, regarding the Category XII proposed rule and corresponding EAR revisions.

AIA continues to support the Administration's goal of eliminating the confusion and ambiguity that arise from overly restrictive control lists that contain numerous redundancies, leading to an inefficient system with an adverse impact on the U.S. economy and by extension the domestic industrial base. With this goal in mind, it is our concern that the proposed Category XII revisions will negatively impact our member companies' ability to compete in the global marketplace.

The intent of the ECR initiative was not to roll-back controls on ubiquitous technologies that have an inherent dual-use purpose and have been controlled as commercial items for decades. Yet, many items with wide-spread commercial availability in foreign markets will either remain controlled under the ITAR, or in fact move from a lower to higher level of control under these proposed changes. In some instances, the proposed controls do not eliminate ambiguity, relying on design intent to

determine jurisdiction or parameters that do not reflect military-specific or most-sensitive capabilities that warrant continued control as munitions items. Furthermore, we encourage the elimination of redundant USML entries across categories, which will greatly improve the efficiency with which items can be classified.

Finally, it is critical to have clear and specific definitions for a number of terms used throughout Category XII, the USML writ large, and the EAR, such as the terms "military" and "commercial." We encourage the Administration to use specific performance parameters, some of which we have included below, to clarify these definitions.

AIA and our member companies thank the Administration for their continued efforts in implementing Export Control Reform, and for considering our comments and proposed revisions.

ITAR Amendment - Category XII

General Comments:

Definition of "Equipment" and its use in Cat XII (and other categories)
We request that the current definition of "equipment" be better defined. Currently, the term "equipment" can be applied to almost any item, including any combination of the listed entries in 120.45 (a)-(g). "Equipment" can be hardware or software, it can be an end-item or not, it can be a system or parts, pieces, components of a system or it can be a separate accessory or attachment to a system. We recommend clarifying the term "Equipment" by amending the ITAR definition to: "Equipment is an end-item used in the production, testing, inspection, or maintenance of an end-item, combination of parts, components, accessories, attachments, firmware, or software." Similar to "accessories" or "attachments," "equipment" is often referring to associated articles that are not parts or components of the system itself; but differs in that the functions and capabilities are similar to items as described in the CCL "B" Group.

We further recommend "equipment" be only enumerated or otherwise described in paragraph XII(e). The term "equipment" is not needed in major system and sub-system paragraphs of Cat XII (as well as in Cat XI or others); however, since the term "equipment" has wide-ranging application, it has the unintended consequence of controlling previously XII(e) parts, pieces, components, accessories and attachment as significant military equipment in paragraphs XII(a)-(c). For example, "equipment" is not needed to be described or controlled in Cat XII(b)(2), "Aiming or target illumination systems or equipment having a laser output wavelength exceeding 710 nm." Only the aiming or target illumination "systems" should be controlled as SME; however, the addition of "or equipment" adds controls beyond the system itself to control the tripod, cleaning kit, adapter cables, and even the transport carry bag. These minor equipment items should have moved from XII(e) to the CCL; but, are now controlled and designated SME on the USML.

SME classification for parts, pieces, and components
We recommend parts, pieces and components only be enumerated or described in XII(e) and the SME designation be removed from the XII(a), (b), (c) & (f) major paragraphs. SME designation should only be placed on individual subparagraphs as appropriate and consistent with SME controls for systems, parts, and components, etc. found in other USML categories. For example, XII(a)(1) enumerates fire control systems, but now also controls formerly XII(e) specially designed parts and components as SME. Helmet

mounted display systems for a combat vehicle are designated SME in XII(a)(9); however, if the helmet mounted display is for an aircraft it is not designated SME in VIII(h)(15).

Similarly, controlling all technical data and defense services related to the defense articles enumerated in this category (XII(f)) as SME has broad ramifications on existing commercial practices. We recommend removing SME control from this category or limiting the application of SME to data and services related to items of greatest military significance.

Order of Review

One purpose of ECR was to create bright lines for unambiguous classification of articles; however, similar/identical technologies continue to be described in multiple entries in addition to being subject to various "catch-all" paragraphs on the USML (e.g. fire control systems). At the same time, an article can also have multiple capabilities which meet the criteria in multiple entries, even in different categories, creating conflict and difficulty in classifying the article. For example, by definition every system with a cooled thermal imager meets the requirements of multiple sections of the document. We therefore first recommend reconciling and eliminating duplicate/overlapping entries where ever possible in the USML; starting with this proposed rule.

For example, Category XV (Spacecraft Systems and Related Articles) and Category XII appear to overlap in several areas. While this does not affect licensing jurisdiction, clarification for where an item is controlled is critical to industry compliance with U.S. export control laws and regulations. In particular, some redundant controls may treat an item as SME. Specific examples include, but may not be limited to:

- Spacecraft payload cable: Category XV(e)(17) or Category XII(a)(7)
- Lasers: Category XV(a)(5) or Cat XII
- Spacecraft Gyroscopes: Category XV(e)(13) or Cat XII(d)(3)
- Developmental Imaging Systems: Category XV(e)(18) or Category XII(c)(21)

Second we recommend adding language to §121.1 USML (b)(1) Order of Review to provide clear guidance for the classification of an article that meets the criteria for multiple USML entries. Should the particular characteristics and functions of an article match more than one entry; it is recommended the entry with the highest level of control (i.e. SME over non-SME or MT over non-MT controlled) be the appropriate classification. Also, to better align with the EAR, it is also recommended that enumerated articles or "otherwise described" articles take precedence over "catch all" paragraphs. Finally, if a defense article still meets the criteria for multiple equally controlled sub-paragraphs, the single predominant subparagraph shall take precedence. While these clarifications were not necessary prior to ECR as each USML category had only one "catch-all" paragraph for all parts, components, etc., they are now essential in order for industry to have a common understanding of the order of review for classifying items.

Finally, an order of precedence/review is necessary for USML categories where conflict/overlap remains between air, land, sea, and space systems and their Cat XI and XII components. Category XI currently defers to Cat XII by clarifying "Electronic equipment and systems not included in Category XII of the U.S. Munitions List," but there are still other instances which need to be reconciled. We recommend XI and XII take precedence over other USML categories with the possible exception of Category XV, as it includes Category XI and XII items that are then "space qualified." We recommend similar language be added as found in XI(a) to, as necessary, provide clear guidance on whether Category XV or Categories XI

or XII takes precedence. For the remaining categories we recommend adding "not included in Category XI or XII of the USML" as follows:

> Cat VI(f) Vessel and naval equipment, parts, components, accessories, attachments, associated equipment, and systems not included in Category XI or XII of the USML, as follows:
>
> Cat VII(g) Ground vehicle parts, components, accessories, attachments, associated equipment, and systems, not included in Category XI or XII of the USML, as follows:
>
> Cat VIII(h) Aircraft parts, components, accessories, attachments, associated equipment and systems, not included in Category XI or XII of the USML, as follows:
>
> Cat X(a) Personal protective equipment, not included in Category XI or XII of the USML, as follows:
>
> Cat XX(c) Parts, components, accessories, attachments, and associated equipment, including production, testing, and inspection equipment and tooling, specially designed for any of the articles in paragraphs (a) and (b) of this category and not included in Category XI or XII of the USML, (MT for launcher mechanisms specially designed for rockets, space launch vehicles, or missiles capable of achieving a range greater than or equal to 300 km).

Paragraph (a) Fire control, weapons sights, aiming, and imaging systems and equipment:

(1) Fire control systems: We recommend control of these systems, regardless of end use platform (air, land, or sea), under Cat XII and not designated SME. Fire control systems are proposed to be controlled without caveats or exclusion and their specially designed components, as SME, in Cat XII(a)(1). However; fire control computers, stores management systems, armament control processors, etc. are currently non-SME controlled in USML Cat VI(f)(6), VII(g)(12), VIII(h)(16), and also in the catch-all XX(c). We recommend implementing the order of review proposal we have outlined above, removing the redundancy across USML categories by controlling all fire control systems, etc. under one USML entry.

(9) Helmet mounted display systems: We recommend removing this system from USML Cat VIII(h)(15). Cat XII(a)(9) should control all these devices based on stated performance parameters and not on end use. Therefore we recommend removing these systems from USML Category VIII(h)(15). We also recommend they not be SME controlled as they are not SME controlled in Cat VIII(h)(15).

Paragraph (b) Lasers, and laser systems and equipment:

The proposed controls on lasers and laser systems are overbroad, potentially capturing many commercial – and in some cases systems that have been controlled as EAR99 items. The note to (b)(6) notes that the controls on LIDAR and LADAR systems do not apply to certain civil automotive systems. Yet, there are also systems designed and utilized for civilian aviation and meteorological applications deployed in numerous international civilian airports that would apparently be captured under Category XII.

Controlling all LIDAR and LADAR systems as munitions items will inhibit commercial innovation and undermine the U.S. industrial capability to deliver quality systems for the U.S. military. USML controls on these items should be limited to sensitive technologies and military-specific capabilities. Accordingly, paragraph (b) would benefit from not only expanding the exclusion beyond civil automotive applications

to include other civilian systems, but also from providing more clearly defined parameters for those items that remain on the USML:

(b)(1) Laser target designators: We recommend defining, in terms of performance parameters, what constitutes a USML laser target designator.

(b)(3)(ii) Laser output wavelength exceeding 1,000nm would control a large number of commercially available laser rangefinders due to the eye safety improvements and availability of low-cost pulsed diodes.

(b)(7) Synthetic aperture LADAR systems with standoff greater than 100m would limit many potential commercial uses for these cameras.

(b)(8)(i) & (ii) The capabilities defined in (8)(i) (resolution of 0.2m or less from an altitude of 16,500 ft) and incorporating a gimbal-mounted transmitter/beam director is easily achieved with commercially available systems with gimbals. The range/resolution requirements specified in (8)(ii) would similarly control capabilities that could be achieved with commercial off-the-shelf components.

(b)(8)(4) Is the intent to control a full system including the algorithms, or just the LADAR capability? Specifying the capability for a heterodyning system with CNR less than 10 is not useful without range parameters, as CNR is range dependent.

(b)(10) Controls on tunable lasers should include a metric for turnability, as there are many commercial products with this capability.

(b)(13) Laser stacked arrays: We request clarification on the location of the power density to be measured, i.e. measured at the laser aperture or elsewhere?

Paragraph (c) Infrared focal plane arrays, image intensifier tubes, night vision, electro-optic, infrared and terahertz systems, equipment and accessories, including cameras and cores:

(c)(2) Photon detector, micro bolometer detector, etc.: We request further definition/clarification as to what constitutes an "encapsulated sensor assembly."

(c)(4) Two-Dimensions photon detectors, etc.: We request clarification if "greater than 256 detector elements" refers to the total number of elements or the number of elements in either direction.

(c)(10) Gimbals with two or more axes of active stabilization having a minimum RMS stabilization less than 200 microradians, and specially designed etc.: As currently written, we believe the catch and release criteria of the "specially designed" definition would "release" nearly every gimbal under (b)(3) because they have "the same function, performance capabilities, and the same or 'equivalent' form and fit, as a commodity or software that: (i) is or was in "production" (i.e., not in "development"); and (ii) is not 'enumerated' on the [USML]." To better clarify the reason for control, it is suggested that the phrase "specially designed for articles controlled in this subchapter" be rewritten similar to USML XI(a)(5)(i) "are specially designed to integrate, incorporate, network, or employ defense articles that are controlled in paragraphs or subparagraphs of the categories of §121.1 of this part that do not use the term specially designed" and/or define specific military characteristics that warrant control.

(c)(11) Gimbals with two or more axes of active stabilization having a minimum RMS stabilization less than 100 microradians: This paragraph does not distinguish between commercial gimbals and those use in or with defense articles. We recommend adding "specially designed for defense articles in this chapter" to ensure that widely-available and utilized commercial capabilities are not controlled under the ITAR. The note about the "non-removable camera payload" would impact commercial gimbal systems " where the customer would like to switch between various styles of commercial visible cameras. The interchangeability of the camera payload feature is used by numerous film makers who would like to switch between various types of commercial visible cameras to capture various images. The proposed rule would force these commercial users to buy more than one gimbal because they use more than one camera. The note could be rewritten to limit the tampering of the system that could prevent an impermissible camera such as ultra-violet, infrared or laser payload from being used in the gimbal system.

Paragraph (d) Guidance, navigation, and control systems and equipment:

Inertial sensor and systems nomenclature: We recommend that inertial sensor and systems nomenclature reflect designations in the 2010 DoD "Policy for International Transfer and Export Control of Inertial Navigation Systems, Gyroscopes, Accelerometers' Other Systems and Related Technology" and the CCL Category 7; namely, Accelerometers; Gyroscopes; Airborne INS; Land INS; Marine INS; IMU and AHRS. We believe a consistent nomenclature would be extremely helpful to industry and the government in relating one classification to another and driving consistency among various requirements. It is also recommended the government work toward aligning all USML, CCL, DOD policies, MTCR and license proviso nomenclatures.

Note to paragraph (d)(1): We recommend deleting "Note to paragraph (d)(1)" as well as removing and reserving USML Cat IV(h)(1), Cat VI(f)(4) & Cat III(c)(1). This would place controls for the same/similar technology for all guidance, navigation and control systems in XII(d) verses multiple USML categories. Navigation systems were already removed from Cat XI and this proposed rule already removes and reserves USML Cat VIII(e) which is also referenced in the "Note to paragraph (d)(1)."

Note 1 to paragraph (d)(2): We recommend deleting "Note 1 to paragraph (d)(2)." All accelerometers should be controlled in this category. USML fuze accelerometers should be controlled in XII(d)(2) vs. III(d) or IV(h) for same rationale above.

We also recommend adding notes to paragraphs III(d) and IV(h) redirecting to XII(d) for accelerometer fuzes, as follows:

> Cat III(d)(2): Safing, arming and fuzing components (including target detection and localization devices) for the articles in paragraph (a) of this category; and
> Note to paragraph III(d)(2): For weapon fuze accelerometers, see USML Category XII(d);
>
> Cat IV(h)(25): Fuzes specially designed for articles enumerated in paragraph (a) of this category (e.g., proximity, contact, electronic, dispenser proximity, airburst, variable time delay, or multi-option) (MT for those fuzes usable in systems enumerated in paragraph (a)(1) of this category);
>
> Note to paragraph VI(h)(25): For weapon fuze accelerometers, see USML Category XII(d).

Note 3 to paragraph (d)(2): We recommend clarifying that the measurement of 'bias' and 'scale factor' refer to one sigma standard deviation with respect to a fixed calibration over a period of one year.

Product line performance: We recommend a note be added to clarify how performance levels should be applied, i.e. are these performance levels against the product line or against each system? It is our recommendation that performance levels be applied against the product line – or model, where a manufacturer has developed a foreign export variant; otherwise there could be instances in which specific items from a product line would fall under USML CAT XII and other items from that product line would fall under CCL Category 7. This could result in significant confusion and increase per unit cost for US suppliers. We recommend using the certification methodology from the DOD Policy as well.

Performance parameters: We recommend that performance levels for USML Category XII be harmonized, excluding several specific exceptions, with "Policy for International Transfer and Export Control of Inertial Navigation Systems, gyroscopes, Accelerometers' Other Systems and Related Technology." DoD has already established that these levels of performance are of interest for control. Maintaining consistency between the DoD Export Policy and the USML would eliminate potential confusion. We recommend the following performance parameters:

Gyroscope: 0.0005deg/√Hr

Recommend lowering the gyro Angle Random Walk performance value from 0.00125 deg/√Hr to 0.0005 deg/√Hr to better align the gyro with the accel and INS performance values. Angle Random Walk is clearly defined by the industry by invoking the Allan Variance. Rationale: this performance parameter is unambiguous and its value is more consistent with the levels specified for the accelerometer control.

Accelerometers: 10 μg and 10 ppm

Using the term uncertainty rather than stability provides better clarity as how to define the terms. Note: Defining "uncertainty" and linking that to "stability" in the CCL is required to avoid confusion.

INS: Airborne INS: 0.28 nmph CEP; at a 1 hour period
Land INS: 0.28 mrad secant (Lat)
Marine INS: 0.2 nm in 8 hour period, CEP

Providing distinct performance parameters for INS configured for airborne, land and marine applications will be easier to both industry and government to understand what is covered by Category XII. Also recommend inserting a statement that INS performance is without position aiding devices

IMU: Gyroscope and accelerometer parameters or airborne INS value

Industry has two ways in which to describe an IMU; as the performance of the gyros and accels, which make up the IMU, or as an equivalent INS performance expressed in nmph CEP. With the proposed USML performance values, this would result in a bit of an asymmetry since the gyro performance levels are more consistent with an 0.8 nmph CEP performance. Thus, changing to the proposed gyro performance would provide the proper balance.

Given the performance parameters above, we recommend removing USML paragraph entry XII(d)(1)(iii), eliminating the "or 25 g" performance requirement. Assuming that the objective of Category XII is to control inertial performance of strategic value while letting the lower performance inertial be controlled by the CCL, the 25 g "or" condition will result in lower performing inertial systems remaining under USML jurisdiction. Defining performance levels, such as in the DoD Export Policy, is sufficient to maintain the intent of the control. We also recommend that a note be added to paragraph (d)(2) and (d)(3) to clarify that the ITAR "see-through rule" does not apply when these items are integrated into and included as an integral part of an item subject to the EAR.

(d)(6)(iv) GPS receiving equipment "specially designed" for use with rockets, missiles, SLVs, drones, or UAVs capable of delivering at least a 500 kg payload to a range of at least 300 (km) (MTCR Category 1 systems). GPS receiving systems for air-breathing UAVs do not require similar survivability capabilities as those that might be designed for inclusion on a rocket or missile. GPS systems would not be designed to take into account range/payload capability, as it is irrelevant to the operation of the system. Accordingly, this could be interpreted to capture virtually any GPS system capable of airborne operation. Moreover, the control relies on design intent, rather than positive criteria for control. The likely outcome would be that any UAV that integrates a GPS capability would be controlled on the USML, effectively negating previous efforts to control commercial/civilian UAVs on the Commerce Control List.

Paragraph (e): Parts, components, accessories, attachments, and associated equipment:

(9) Infrared lenses, mirrors, etc.: We recommend removing and reserving this entry and controlling these lesser items if "specially designed" on the CCL. Otherwise, we recommend providing performance threshold control parameters for each.

(10) & (11) Signal or image processing electronics: We recommend these items be placed under XI(b), or remove and reserve XI(b), or define/reconcile what is controlled between these USML entries.

(11)(i) Automatic or aided detection etc.: We recommend these terms be defined, including the threshold for what constitutes a "military or intelligence" item. Does the recognition/classification of a generic "man", "truck" or "plane" which can be performed by commercial systems meet this entry threshold or does the recognition/classification have to be a "military" soldier, a tank, or Mig-29. Being able to discriminate a commercial tanker truck or other item may not have any "intelligence" value unless combined with location or the number of trucks over a period of time.

Note to paragraph (e)(11)(ii). As currently written, this paragraph confirms that combining data from two Category XI systems does not constitute sensor fusion and is not USML controlled. This should be clearly stated in the note to ensure that the definition for multi-sensor fusion aligns with other USG standards, such as DoDI S-5230.28.

Paragraph (f): Technical data and defense services:

Notes 1, 2, & 3 to paragraph (f): We recommend the USG confirm their intent not to control any technical data or software which is not enumerated in these notes. As stated in the Supplementary Information of this proposed rule, these notes are revised to clearly describe the technical data and defense services controlled in paragraph (f). Note 2, paragraph A enumerated what software and technical data is "included" in paragraph (f). It did not make any reference or enumerate any entries in

paragraph (d); therefore as written, any technical data, including manufacturing know-how, of a USML accelerometer, gyroscope, or INS is no longer enumerated on the USML. If it is the intent of the government to still control this data on the USML, we recommend a complete review of Notes 1, 2 & 3 to paragraph (f).

Note 2 paragraph C: These items are also enumerated or described in USML Cat IX(b). We recommend removing paragraph C or make a reference note in Cat IX(b) that these items are controlled in Cat XII(f).

Defense Services: We were pleased to see the 3 June 2015 published rule clearly state the maintenance of an item subject to the EAR that has been integrated or installed into a defense article not be defined as a defense service.

Software: We agree with the DOS decision to separate "software" from the definition of "technical data." We believe this is a positive step toward a single list and will make it easier to enumerate what software should be controlled as was attempted in Note 2 to paragraph (f).

Administrative Notes

Title: We recommend adding a clarifying comma to the title; "Fire Control, Range Finder, Optical, and Guidance and Control Equipment"

Proper use of "or": The second to last entries in XII(a), XII(b), and XII(c) should have "; or" at the end as done in XII(d) or XII(e) and rest of the USML. The third to the last entry in XII(c) is followed by "or" which should be deleted.

RIN 0694-AF75: Revisions to the Export Administration Regulations (EAR): Control of Fire Control, Range Finder, etc.

Under the proposed revisions to the EAR, it appears that certain cameras typically used for cinematic or news gathering applications would be moved from the non-ECR (e.g. non-500 or 600 series) ECCNs (e.g. 6A004, EAR99) into more-restrictive ECCNs (e.g. 6A615), increasing the level of control for articles that are in broad commercial use and have foreign availability. This runs contrary to the state purpose of ECR and AIA encourages the Administration to reconsider the implementation of this more-restrictive control.

Best Regards,

Remy Nathan
Vice President – International Affairs
Aerospace Industries Association

PUBLIC SUBMISSION

As of: 7/1/15 10:17 AM
Received: July 01, 2015
Status: Pending_Post
Tracking No. 1jz-8jqd-kgx1
Comments Due: July 06, 2015
Submission Type: Web

Docket: BIS-2015-0016
Revisions to the Export Administration Regulations (EAR): Control of Fire Control, Range Finder, Optical, and Guidance and Control Equipment the President Determines No Longer Warrant Control Under the United States Munitions List (USML)

Comment On: BIS-2015-0016-0001
Export Administration Regulations: Control of Fire Control, Range Finder, Optical, and Guidance and Control Equipment that No Longer Warrant Control under the U.S. Munitions List

Document: BIS-2015-0016-DRAFT-0008
Comment on FR Doc # 2015-10353

Submitter Information

Name: Anonymous Anonymous

General Comment

See Attached File.

Attachments

Category 6 BIS Comment

Introduction:

Category 6 items play a critical role in motor vehicle safety systems by aiding drivers in adverse weather conditions (commonly referred to as "active safety"). The proposed BIS Category 6 rules will greatly increase restrictions on exports of this hardware, software, and technology. The proposed rules will virtually prevent further development or implementation of Category 6 items in vehicle active safety systems. Furthermore, if BIS adopts these proposed rules, non-U.S. auto manufacturers will have a critical safety advantage over their U.S. competitors because they will not be constrained by these BIS rules.

If BIS adopts the proposed rules, many previously EAR99 items will become controlled and subject to onerous licensing requirements and restrictions. The proposed rules will hinder global companies, particularly U.S. companies, with burdensome requirements and restrictions of hardware, software, and technology licensing; deemed export licensing; removal of certain license exceptions; the expansion of Regional Stability ("RS") licensing requirements to Canada; and a presumption of denial for ECCNs with RS reasons for control, regardless of destination.

Proposed Rule Issue Overview/Auto Industry Impact:

As a global auto manufacturer with engineering centers located throughout the world, our global teams take a collaborative approach with many engineering activities. We rely on our global presence and worldwide talent to engineer and produce safer vehicles. The proposed rules will make worldwide intra-company active safety collaboration using Category 6 items nearly impossible.

Our company, like many others, hires foreign national employees and contractors for a variety of positions, including those relating to engineering and safety. The active safety area is a technologically complex field requiring highly educated individuals, many of whom are foreign nationals. While our company requests deemed export licenses when necessary, the proposed rules will largely prevent BIS from granting deemed export licenses for Category 6 items due to the presumption of denial and/or case-by-case review of such licenses.

Should BIS adopt these proposed rules, U.S.-based companies will be severely disadvantaged in developing active safety features that incorporate Category 6 items. Non-U.S. based companies will be at a distinct competitive advantage and will force U.S. based manufacturers out of the active safety area, compelling them to purchase and integrate Category 6 items locally in the global markets where they participate. The BIS licensing policy for these items will create an enormous competitive advantage for foreign manufacturers.

ECCN Analysis:

The ECCNs listed below will all have licensing requirements that create a competitive disadvantage for U.S. automakers. The software and technology will have worldwide RS licensing requirements, with a corresponding presumption of denial for license requests, regardless of destination country.

ECCNs 6E001; 6E002; 6D003.c; and 6D991 deemed export analysis.

In order to integrate a 6A003 item on a vehicle, a highly qualified team of engineers and researchers will need to be involved, many of whom will likely be foreign nationals. In order to perform development work in the U.S., we will need to share Category 6 technology with foreign national employees and contractors. Previously, we would have applied for deemed export licenses, however, if the proposed rules are implemented as written with a presumption of denial, regardless of country, Category 6 active safety work will dramatically slow down, or stop all together.

The proposed rules do not specifically call out deemed exports, however, §734.2 of the regulations make clear that release of technology or source code subject to the EAR to a foreign national is deemed to be an export to the home country or countries of the foreign national. *See* 15 CFR 734.2 (2015). A presumption of denial, regardless of country, would essentially shut down any further work involving use of Category 6 items or technology to improve active safety features.

ECCNs 6E001; 6E002; 6D003.c; and 6D991 export analysis.

As a global, full line auto manufacturer we need to share Category 6 software and technology with our global engineering centers outside of the United States. Due to the controls on these items an export license will be required before any transfers can occur. However, if the proposed rules are implemented as written these licenses will be reviewed with a presumption of denial, regardless of country. Auto manufacturers with a global engineering organizations will essentially be prevented from developing vehicles using Category 6 technology when that technology needs to be shared globally.

6A003 Analysis:

As a global, full line auto manufacturer many new active safety components will be incorporated into vehicles throughout the world. In order to service these vehicles we will need to export service replacement 6A003 items worldwide. The proposed regulations will make it very onerous on our customers to have a 6A003 item serviced or replaced due to licensing constraints.

The proposed rules will expand the restriction in license exception APR to exclude using §740.16(a) to reexport <u>all</u> 6A003 items from Country Group A:1 and cooperating countries. Currently, APR only has a restriction on certain Category 6A003 items, however, the proposed regulation will expand this restriction to <u>all</u> 6A003 items. For example, APR is very useful if we export stock to a European parts warehouse, and want to reexport a service replacement part to an A:1 location. If the proposed rules are implemented as written, a BIS reexport license will be needed. The problem is this slows down the service process and ultimately makes our customers have to wait 30-60 days because a reexport license

is needed for a service part. This type of delay is unacceptable from a safety and customer service standpoint, and will prevent the incorporation of promising active safety features into our vehicles.

6D994 Analysis:

The proposed control on 6D994 software is especially troublesome because it will further impact our ability to provide timely vehicle service. 6D994 will control software specially designed for the maintenance, repair, or overhaul of 6A002, 6A003, or 6A990 commodities. 6D994 software was previously EAR99, but would now have RS controls that impose worldwide licensing requirements, including for exports to Canada, and a case-by-case license review.

As an example, if a vehicle sold in Europe incorporates a 6A003 item, and that item requires service, a dealer technician will have to use diagnostic tools and software (6D994) to perform maintenance or repair of that item. In order for the technician to have access to 6D994 software they will need to download it from a U.S. based corporate server. Prior to that technician downloading the software, a BIS license will need to be obtained for that dealer. Alternatively, if the software download occurs from a European server, a BIS re-export license will still be required for the dealer. We have thousands of dealers outside of the U.S. and each dealer, in order to service a vehicle that includes a 6A003 item, will require a BIS license in order to perform the service.

If the proposed rules are implemented as written, we will potentially need to apply for thousands of BIS export licenses per year in order to service our customers' vehicles outside of the U.S.

6E994 Analysis:

Non-U.S. dealer personnel will also need access to 6E994 technology when performing maintenance or repair of a vehicle equipped with a 6A003 item.

Today, dealer technicians are able to download service information for a particular vehicle from our service website. In order for a technician to have access to the required information to repair or maintain a 6A003 item, a BIS license will be required. A license for 6E994 technology, due to the world-wide RS licensing requirements, regardless of country including Canada, will be reviewed on a case-by-case basis. Again, we have thousands of dealers outside of the U.S. and will be applying for potentially thousands of BIS export or reexport licenses per year in order to service 6A003 equipped cars.

Due to the licensing required for access to 6D994 or 6E994 items, we will be requesting thousands of BIS export licenses per year. Also, these licenses will require a fast turnaround because the nature of the work means a customer's car will be sitting at a dealership inoperable, or the vehicle could be in operation without the benefit of important safety features, with drivers and pedestrians at risk for injury or death.

The proposed restrictions on 6A003, 6D994, and 6E994 will not only slow down the ability of the dealer to provide a replacement part, but will also dramatically slow down the time for the repair. An export or reexport license will be required for the part, and a license will be required for the dealer to provide the service. Non-U.S. manufacturers will not have these constraints. For example, a Chinese auto

manufacturer that incorporates a 6A003 item on their car and sells that vehicle to a European customer will be in a position to provide far better service because they will not be constrained by licensing concerns.

Conclusion:

BIS must consider the impact the proposed regulations will have upon U.S. auto manufacturing with respect to active safety systems that require Category 6 items. The administration costs will be staggering for U.S. business, and force duplicative development work because of licensing constraints. Furthermore, the impact to BIS for licensing will not be inconsequential.

Some suggestions to minimize impacts are: (1) Allow for intercompany transfers (including software/technology downloads to dealerships), via a license exception (ICT) of items and technology that fall in this space; (2) Insert an automotive decontrol for all 6A items (or a mass market carve-out similar to Category 5, Note 4 items); (3) Remove presumption of deniability, regardless of country, for all Category 6 items.

Implementation of the suggestions above would provide U.S. manufacturers with latitude to develop active safety items and technology for automotive use. The proposed regulations as written will curtail further development in this area and prevent safer vehicles from being developed and manufactured in the U.S.

PUBLIC SUBMISSION

As of: 7/7/15 12:42 PM
Received: July 02, 2015
Status: Pending_Post
Tracking No. 1jz-8jra-44ba
Comments Due: July 06, 2015
Submission Type: Web

Docket: BIS-2015-0016
Revisions to the Export Administration Regulations (EAR): Control of Fire Control, Range Finder, Optical, and Guidance and Control Equipment the President Determines No Longer Warrant Control Under the United States Munitions List (USML)

Comment On: BIS-2015-0016-0001
Export Administration Regulations: Control of Fire Control, Range Finder, Optical, and Guidance and Control Equipment that No Longer Warrant Control under the U.S. Munitions List

Document: BIS-2015-0016-DRAFT-0009
Comment on FR Doc # 2015-10353

Submitter Information

Name: Anonymous Anonymous

General Comment

As a US small business the proposed BIS and State Department Rule changes will have significant negative impact on us an all other small businesses operating in this space. There are a number of ways in which the current and proposed changes impact small business but the most pressing and significant to ongoing operations are:
1. In order to even fully understand the complex and sometimes conflicting changes the report proposes, small businesses would have to hire specialized legal counsel to fully evaluate the proposed changes and render an opinion as it pertains to a specific product.This unreasonable expense is compounded when you factor in that an opinion would be required for each separate product and based not just on the finished product but also component parts, intended use and ultimate end user.
2. In order to comply on an ongoing basis specific export personnel would need to be hired to maintain and insure compliance efforts. Small businesses do not have the resources for such a specific employee while at the same time cannot afford to risk NOT having such an employee.
3. Current BIS and State Department rules are already so cumbersome that we shy away from most export transactions since small business does not have the bandwidth to handle the compliance. The proposed changes would make this even more difficult and would result in most small business rejecting any opportunities that may exist for international business.
4. The increase in complexity of these regulations will strangle small business innovation. This valuable resource has long contributed to the superiority of the USA in world affairs both commercial and defense. It is the small business that brought forth many of the game changing innovations that we appreciate today. If small business is cut off from potential international

revenue then, short of a full government sponsored effort, the resources and motivation to innovate is cut off. In the long run foreign companies with access to wide open non-ITAR non-EAR sales will have the resources to invest in innovative research and eventually we will lose the edge we are so misguidedly trying to protect.

While there is no question that the current and proposed rule changes represent a huge sacrifice to small business we do appreciate that as citizens of the United States of America we must all do our part for national security. We are well aware of the ultimate sacrifice that our brothers in arms have made for our freedoms and in this light we believe that all US businesses should and would sacrifice their livelihood for the greater good. However, much of the technology addressed in the rule changes does not pose a security threat to the US while its restriction does pose a serious threat to US small business. The traditional wording and formatting of the combined export controls rules do not allow for clear definition and control of modern technologies. It is very difficult to isolate a clear bright line where many of these technologies are concerned. An example is the imaging, range finding and opto electronics categories. While the ability to see in the dark is a hallmark of US Defense superiority, the regulations do not seem to allow for a useful mechanism to keep pace with modern technology development cycles. As an example:

We are superior in traditional image intensified night vision and while the commercial market is filled with competing products they never measure up to the US article. These should be restricted.

Thermal imaging FPA technologies are different. The FPA has become a mass production commodity. This is a result of corporate and government desire for low cost easily produced product. FPA sensors are manufactured with commercial wafer fabrication facilities. This technology is now subject to an approximation of Moores law and will double performance in little time. The engineering resources to advance the technology are numerous throughout the world.

Currently the rules limit sensors on pixel sizes and frame rates. The proposed rules want to eliminate frame rate exemptions. However, at this current time Chinese manufacturers are producing sensors and cameras with full frame rates at 640x480 and even 800x600 pixel counts far exceeding current limits. A quick google or alibaba search will reveal hundreds of foreign companies producing quality FPA's, ballistic computers, fire control, laser range finding and targeting optics. All of these available with no ITAR restrictions to anyone in the world. The product can be on par with US efforts.

While foreign systems can perform as well as US product we still have a marketing advantage. This is one manufacturing area where the world perceives "MADE IN THE USA" to represent a superior product. US business should capitalize on this advantage before it is gone. We implore the BIS and State Department to abandon quick fix solutions and make the effort to rethink and overhaul the entire export control regulation process.

PUBLIC SUBMISSION

As of: 7/7/15 12:48 PM
Received: July 05, 2015
Status: Pending_Post
Tracking No. 1jz-8jta-x59l
Comments Due: July 06, 2015
Submission Type: Web

Docket: BIS-2015-0016
Revisions to the Export Administration Regulations (EAR): Control of Fire Control, Range Finder, Optical, and Guidance and Control Equipment the President Determines No Longer Warrant Control Under the United States Munitions List (USML)

Comment On: BIS-2015-0016-0001
Export Administration Regulations: Control of Fire Control, Range Finder, Optical, and Guidance and Control Equipment that No Longer Warrant Control under the U.S. Munitions List

Document: BIS-2015-0016-DRAFT-0011
Comment on FR Doc # 2015-10353

Submitter Information

Name: Anonymous Anonymous

General Comment

The entirety of the proposed rules addressing civil automotive crash avoidance systems, including parts, components,
software, and technology, should be withdrawn or completely rewritten to facilitate the development of this life-saving
technology.

Please see the uploaded file 6A990-1 for a detailed discussion and specifics.

Attachments

6A990 Comment -1

Re: RIN 0694-AF75

Automotive Crash Avoidance Systems

The current controls on LIDAR-based automotive crash avoidance systems, parts and components (including e.g., read-out integrated circuits ("ROICs"), focal plane arrays, software, and technology), along with the associated license exceptions and licensing policies, represent several years of negotiation between government and industry. These long awaited provisions finally went into effect less than a year ago, on October 15, 2014. Since that time, industry has been making business decisions with long-term implications in reliance on them. To have these controls fundamentally rewritten at this late date is extraordinarily disruptive.

As is anticipated by the proposed automotive carve out Note to paragraph (b)(6) of Category XII, automotive collision avoidance LIDAR will soon be commercially available. Unfortunately, the proposed rule undoes much of the progress made over several years of negotiation, and risks deployment of this life saving technology. If adopted as final rules, the collective impact of the proposed changes may significantly hinder adoption of automotive crash avoidance systems and directly result in tens of thousands of otherwise preventable deaths.

The national security and foreign policy risks inherent in automotive LIDAR is low, and was adjudicated by the government prior to the effective date of the current rules. Absent some new development or piece of information that is both of sufficient gravity to justify draconian changes and also was unavailable to the government when these rules went into effect, the regulatory treatment of automotive crash avoidance systems should not be tightened. If current licensing policies have resulted in diversion of controlled items to bad ends, this should be more fully explained.

Absent some actual cognizable harm to national security under current rules, however, the Bureau of Industry and Security ("BIS") should avoid whipsawing industry by the imposition of this proposed rule. BIS is urged to withdraw or heavily revise all of the changes in the proposed rule related to automotive crash avoidance systems (including their components, software, and technology), as described below. Although this comment focuses on automotive crash avoidance systems, portions of it are more broadly applicable to the May 5 Federal Register Notice.

§ 734.4 De minimis U.S. Content and 0A919

The proposed rule eliminates *de minimis* treatment for military commodities, and redefines military commodities to include any which incorporate an Infrared Focal Plane Array (IRFPA) or an automotive ROIC. Commerce needs to recognize that U.S. based manufacturers of these products operate in a global competitive marketplace. Components which are as capable or better than U.S. origin items are either already available from several sources outside of Wassenaar countries, or will be quickly if access to U.S. components is highly restricted. Accordingly, elimination of *de minimis*

treatment for these products will have the principal effect of eliminating U.S. suppliers from foreign manufacturers supply chain, but will not have any meaningful impact on access to comparable technologies. Accordingly, we recommend withdrawal of these proposals, or at a minimum revision to remove adverse regulatory treatment of automotive crash avoidance systems.

§§ 740.2, 740.16, & 740.20 Restrictions on all License Exceptions

The proposed rule eliminates all license exceptions for IRFPAs and automotive ROICs, including associated technology, on the presumption that all such FPAs and ROICS have potential for use in night vision devices. This presumption is wrong. Automotive crash avoidance systems are best thought of as machine vision devices, not night vision devices. At least with respect to LIDAR-based automotive collision avoidance systems, the technology, parts and components captured by the proposed controls are poorly suited for night vision and do not warrant enhanced controls. Indeed, the only reason that machine vision devices such as LIDAR-based automotive crash avoidance systems operate in the infrared is because there is no frequency of visible light that is eye safe (under Food and Drug Administration regulations on lasers) and also has sufficient power for the system to operate at the required ranges. The fact that the system operates in the infrared is irrelevant to its operation at night.

To avoid an overbroad control that hinders the broad based adoption of an important life-saving safety device, we suggest that existing license exceptions not be eliminated and the proposal be withdrawn. At a minimum, the over-breadth of this control can be mitigated by removing reference to 6A990 and 6E990, and further refining 6A002.a.3. to more clearly describe the IRFPAs of military utility. Removal of automotive crash avoidance systems from this proposal is warranted because the national security issues related to it were fully adjudicated prior to the effective date of the current 6A990. Issues related to IRFPAs will be discussed in more detail in the below section related to 6A002.a.3.

§ 742.6 Regional Stability Licensing Policy

The proposal makes significant changes to the controls on automotive crash avoidance systems, and associated parts, components, software and technology, backsliding materially from the understanding between industry and the government embodied in the current regulations. We suggest that BIS withdraw the proposed changes to the licensing policy to avoid serious harm to industry, and in addition reconsider whether a regional stability control is appropriate for mass-market civil automotive safety equipment. Consistent with most civil automotive parts and components, a more measured control would Anti-Terrorism or EAR99.

Particularly offensive is § 742.6(b)(iv), which establishes a presumption of denial for exports of software or technology for civil automotive crash avoidance systems, including mere build-to-print technology, currently exportable under license exceptions to a range of destinations. BIS is reminded that for some of the covered components,

there are no available domestic fabricators of parts. As such, establishing a presumption of denial for the export of such technology and software places the viability of U.S. industry in question. This proposal will doubtless thrill U.S. industry's overseas competitors, but may devastate the domestic industrial base with no corresponding national security benefit.

§ 772.1 Definitions of terms as used in the EAR

Some of the challenges with § 772.1 can be best cured with a more nuanced line drawn to distinguish IRFPAs deserving control under the ITAR, 6A002, and 6A003, discussed below. Foreign competitors manufacturing automotive crash avoidance systems using available foreign origin components face no such requirement for encapsulation as envisioned here, placing U.S. industry at a disadvantage relative to their foreign competitors with no corresponding benefit to national security. For clarity, however, it would also be beneficial to add an explanatory note here to the effect that "IRFPAs used in automotive or civilian LIDAR are not subject to 6A002."

6A002, 6A003, 6A993, 6D002, 6D003, 6D991, 6D994, 6E001, and 6E002

In general, the proposed control on focal plane arrays is insufficiently precise to delineate between IRFPAs in common use in numerous civil applications and which are available from a significant number of foreign providers, including suppliers located in countries that are not members of the Wassenaar Arrangement. A regional stability control on such items does nothing to limit their availability to potential adversaries, but significantly disadvantages U.S. suppliers in legitimate trade.

In addition, the proposal fails to establish the "bright line" between truly military items and commonly available IRFPAs in civil use. Imposition of ITAR or regional stability controls on items, software, and technology that is readily available and in wide spread civil use outside of Wassenaar will cause immediate and irreparable harm to U.S. industry. Accordingly, we request that the department conduct a formal review of foreign availability prior to finalizing this rule.

In the conduct of that foreign availability review, and in revising the proposed rule, we suggest that the department consider that the proposed control lacks necessary specificity. It is overly reliant upon the materials used to manufacture the sensor, which is the wrong factor to focus upon and we suggest deletion of reference to these materials in favor of actual performance criteria.

In addition to light wavelength, it takes at least eight parameters to adequately characterize the performance capabilities of an IRFPA (i.e., pixel pitch, pixel format, dark current, temperature of operation, quantum efficiency at the critical wavelengths, fill factor, input capacitance and response frequency). Only IRFPAs that pass certain performance thresholds in each parameter are truly military-only. These are properly subject to ITAR controls. Many IRFPAs that fall below the threshold of military-only in any given category may nevertheless have significant and widespread civil uses.

Commonly available IRFPAs in widespread civil use, but which are high enough quality to have meaningful military applicability, are the proper subject of control in a specific Export Control Classification Number ("ECCN") with licensing policies commensurate to their availability outside of Wassenaar. Under the proposed rule, however, many IRFPAs in common civil use are subject to inappropriately high levels of control. Similarly, IRFPAs with poor performance in any of these parameters, and which might be completely useless for almost any application, would still be captured at an inappropriate level. For those IRFPAs whose performance in these parameters is so poor as to make them unsuited for military applications, enumeration in a specific ECCN serves no national security or foreign policy purpose.

Controls based on the material used to manufacture the sensor are too crude to effectively discriminate between items that warrant controls and those which do not. Although we realize characterizing these performance parameters will require some effort, it is necessary to craft a regulation that avoids needless damage to industry. We suggest that no changes be made to the license exceptions or licensing policies to EAR controlled IRFPAs, as such controls are not appropriate for items in common civil use and available from many non-Wassenaar sources.

If, on additional review, it proves impossible to differentiate IRFPAs in common civil applications from truly military ones, it may be that an appropriate discriminator between ITAR and EAR controlled IRFPAs is the "specially designed" criteria. We suggest that parts, components, software, and technology "specially designed" for civil automotive crash avoidance systems be EAR99 or subject only to Anti-Terrorism controls.

<u>6A990, 6D991, 6D994, and 6E990</u>

There is currently no clear textual basis for control of ROICs in the ITAR. Accordingly, most of industry has treated all ROICs as EAR99 for decades. Unless there is an articulable harm that can be shown to have arisen from the current controls, the department should not impose new controls that will demonstrably disadvantage U.S. industry in an effort to protect against a hypothetical harm.

Similarly, 6A990 and 6E990 were added to the Commerce Control List last year as the first enumerated controls on ROICs. Unless those controls can be shown to have caused an articulable harm to U.S. national security or foreign policy, we recommend withdrawal of the proposed amendments to these ECCNs as unnecessary. Protection against a purely hypothetical harm is not a valid basis for overregulation of industry. In particular, we urge the retention of currently applicable license exceptions and licensing policies.

Furthermore, absent some indication that there has been some effort to divert 6A990 or 6E990 items to undesirable ends, we suggest that a review be undertaken to increase their availability and desirability in the marketplace by further lowering controls on these important life-saving safety devices. If there is reason to control them in a specific

ECCN, we suggest that an effort be undertaken to multilateralize the control at Wassenaar with at most a National Security Column 2 control, with standard licensing policies and exceptions. EAR99 may be more appropriate, as that is the normal control imposed upon civil automotive parts and components.

Automotive crash avoidance systems are likely to be installed in substantially all newly manufactured cars within a few years, unless the government makes that impossible by regulations such as these. In combination with the proposed lack of availability of license exceptions and the changes to licensing policies, the proposed changes to 6A990 and other ECCNs discussed above will make it difficult or impossible to deploy this technology. 6E990 amendments will make it difficult or impossible for U.S. companies to manufacture their essential LIDAR components off-shore, and there are few to no domestic options available for that manufacture. If there is an update to the software running the system that needs to be deployed to existing automobiles worldwide, 6D991 makes it impractical or impossible to obtain the required licenses for the software update. The imposition of 6D994 could easily eliminate U.S. companies from even providing diagnostic software to read codes generated by civil automotive computers and used to identify component failures.

The entirety of the proposed rules addressing civil automotive crash avoidance systems, including parts, components, software, and technology, should be withdrawn or completely rewritten to facilitate the development of this life-saving technology. Failure to do so will likely lock U.S. providers out of the international marketplace.

PUBLIC SUBMISSION

As of: 7/7/15 1:13 PM
Received: July 06, 2015
Status: Pending_Post
Tracking No. 1jz-8jty-n7lm
Comments Due: July 06, 2015
Submission Type: Web

Docket: BIS-2015-0016
Revisions to the Export Administration Regulations (EAR): Control of Fire Control, Range Finder, Optical, and Guidance and Control Equipment the President Determines No Longer Warrant Control Under the United States Munitions List (USML)

Comment On: BIS-2015-0016-0001
Export Administration Regulations: Control of Fire Control, Range Finder, Optical, and Guidance and Control Equipment that No Longer Warrant Control under the U.S. Munitions List

Document: BIS-2015-0016-DRAFT-0016
Comment on FR Doc # 2015-10353

Submitter Information

Name: Anonymous Anonymous

General Comment

License exception APR for cameras described in ECCN 6A003 should be extended to cameras with up to 328,000 detector elements. Such cameras are already available in foreign countries without license requirements:

Belgium: http://www.xenics.com/en/xeva-17-320-te3
UK: http://www.photonic-science.com/products/swir-ingaas-cameras.html

PUBLIC SUBMISSION

As of: 7/7/15 1:23 PM
Received: July 06, 2015
Status: Pending_Post
Tracking No. 1jz-8ju0-323t
Comments Due: July 06, 2015
Submission Type: Web

Docket: BIS-2015-0016
Revisions to the Export Administration Regulations (EAR): Control of Fire Control, Range Finder, Optical, and Guidance and Control Equipment the President Determines No Longer Warrant Control Under the United States Munitions List (USML)

Comment On: BIS-2015-0016-0001
Export Administration Regulations: Control of Fire Control, Range Finder, Optical, and Guidance and Control Equipment that No Longer Warrant Control under the U.S. Munitions List

Document: BIS-2015-0016-DRAFT-0018
Comment on FR Doc # 2015-10353

Submitter Information

Name: Anonymous Anonymous

General Comment

Comments to BIS Proposed Rule: EAR: Control of Fire Control ... under the USML

Attachments

Comments- EAR-Control of Fire...No Longer under the USML

FLIR-ONE-GEN2_Android-iOS-FAQ

Therm-App by Opgal-Sales Brochure

I3 Systems-Korea_Prototype Uncooled Thermal Imaging Camera accessory to Smartphone

Seek Thermal- Uncooled Thermal Imaging Camera for iPhone and Android

Comments regarding the proposed rule "Revisions to the Export Administration Regulations (EAR): Control of Fire Control, Range Finder, Optical, and Guidance and Control Equipment the President Determines No Longer Warrant Control Under the United States Munitions List (USML)".

Subject: RIN 0694-AF75
Docket No.: 140221170-4170-01

Revisions to ECCN 0A919

To control the reexport of such military commodities that incorporate a wider group of items on the CCL, this proposed rule would revise ECCN OA919 to control military commodities produced outside the United States that are not subject to the ITAR, and have any of the following characteristics: (i) Incorporate one or more commodities classified under ECCNs 6A002, 6A003, or 6A990; (ii) incorporate one or more commodities controlled under ECCN 6A993.a as a result of meeting the criteria specified in Note 3.a to ECCN 6A003.b.4.b (i.e., having a maximum frame rate equal to or less than 9Hz).

Comment:
Although this revision to ECCN 0A919 is referenced toward military commodities, it could have the unintended consequence to restrict the global commerce of 'thermal cameras' based on ECCN 6A003.b.4.b, and their 6A993 classification. This revision would force the regulation of the 6A993 microbolometer based thermal camera back into the aegis of the CCL. The BIS spent considerable time and effort working with original equipment manufacturers (OEM) that a reduced frame rate based thermal camera could be separated from the 30 Hz and higher frame rate cameras governed by ECCN 6A003. Through diligent effort the "9 Hertz" uncooled thermal imaging camera (6A003.b.4.b) was successfully developed, and it was given a 6A993 classification. The global OEM vendors have spent considerable effort to market this low frame rate thermal imaging camera for commercial applications such as fire detection, non-contact thermometry, predictive maintenance, building inspection, advance driver assistance systems, etc. The 6A993 designation immediately 'leveled' the 'playing' field with respect to the international market. The USA manufacturers were no longer at a disadvantage in the international market. It is a disservice to reclassify the "9 Hertz" thermal imager because it might be used in a military application.

Revisions to ECCN 6A993
15 CFR 744.9 is proposed to be revised to require a license for 9 Hz cameras if exported to a 'military end user' or if incorporated into a 'military commodity'.

Comment:
Unknown at the time of the original classification was a 'future' application to take this 6A993 commodity into the "consumer" world. Recently, uncooled thermal imaging cameras (based on ECCN 6A003.b.4.b) have been developed as an accessory to the "Smartphone". This is a major event in the 'photonics' industry whereby the thermal infrared operating in the 7 to 12 micron spectrum is accessible to the global 'consumer' market. Global vendors FLIR (USA), Seek Thermal (USA), i3systems (Korea), and Opgal's Therm App (Israel) are currently or are in the process of selling these 9 Hertz thermal imaging cameras that are directly connected to a Smartphone. These 9 Hertz cameras are sold directly through vendors such as Amazon, Best Buy, Home Depot, Walmart, etc. as well as their own websites without any reference to CCL/ITAR. Each of the aforementioned products operate with a 9 Hertz or lower frame rate. They require no formal expertise to operate the camera. Software applications have been developed and are openly available from the Apple and Google platforms to operate the thermal camera with Apple or Android equipped Smartphones. It is a disservice to American industry to place restrictions on this novel consumer product. Additional foreign manufacturers will join this fast growing and global market using the microbolometer based IRFPA manufactured from non-USA sources. It is impossible to know the end-use or end-user when purchasing an accessory for the ubiquitous Smartphone. Consequently, it is unrealistic to attempt to control the 9 Hertz thermal camera because it might be used for a military application.

5. Section 740.16 is amended by revising paragraphs (a)(2), (b)(2), and (b)(3) to read as follows:

Comment:
The proposed rule change specified in (b)(3) (ii) places a restriction (≤ 110,000 elements) on the total number of elements that can be utilized in civil products as described in 740.16. This would add another obstruction to international commerce by the US government on US companies. Cameras described by 6A003 with 640x512 (327,680 elements) format are routinely available for commercial applications especially fire detection, industrial process control, material identification, automotive manufacturing, solar cell quality control, semiconductor diagnostics, etc

These are available from numerous international vendors offering both photon based IRFPA (SWIR & MWIR)) and thermal based IRFPA (uLWIR) sensors. A brief vendor list referencing the active photodetector elements illustrates their availability:

Optris GmbH (Germany) http://www.optris.com/	Commercial vendor offering uLWIR camera with 640x480 sensor (307 200 elements)
Xenics (Belgium) http://www.xenics.com/en/products/cameras	Commercial vendor offering SWIR camera with 640x512 sensor (327 680 elements) and uLWIR camera with 640x480 sensor (307 200 elements
Jenoptik (Germany) http://www.jenoptik.com/	Commercial vendor offering uLWIR camera with 1024x768 sensor (786 432 elements) and MWIR camera with 640x480 sensor (307 200)
Raptor Photonics (UK) http://www.raptorphotonics.com/	Commercial vendor offering SWIR camera with 640x512 sensor (327 680 elements)
Allied Vision (Germany) http://www.alliedvision.com/	Commercial vendor offering SWIR camera with 640x512 sensor (327 680 elements)
Photonic Science Ltd (UK) http://photonic-science.co.uk/	Commercial vendor offering SWIR camera with 640x512 sensor (327 680 elements)
Keii Electro Optics Tech (China) http://www.keii.com.cn/	Commercial vendor offering uLWIR camera with 640x480 sensor (307 200 elements)
Micro-epsilon (Germany) http://www.micro-epsilon.com/index.html	Commercial vendor offering uLWIR camera with 640x480 sensor (307 200 elements)
Dali (China) http://www.dali-tech.us/	Commercial vendor offering uLWIR camera with 640x480 sensor (307 200 elements)
Rinch Industrial Co. (China) http://www.cnrinch.com/infrared-camera-English.htm	Commercial vendor offering uLWIR camera with 640x480 sensor (307 200 elements)
Vigo (Poland) http://www.vigo.com.pl/products	Commercial vendor offering uLWIR camera with 640x480 sensor (307 200 elements)
ABS GmbH (Germany) http://www.kameras.abs-jena.de/	Commercial vendor offering SWIR camera with 640x512 sensor (327 680 elements)
Magnity (China) http://www.magnity.com.cn/english/index.html	Commercial vendor offering uLWIR camera with 640x512 sensor (327 680 elements)

As is evident, foreign availability of infrared cameras with sensors exceeding the 111 000 elements limit are 'standard' commercial (civil) products in the global market. US manufacturers are at a distinct disadvantage, and they will lose market share. . The recommendation is to place a one million element limit on the IRFPA. This will restrict the next generation SWIR, MWIR, and LWIR IRFPA with 1280x1024 sensor (1 310 720 elements) to additional controls.

8. Section 742.6 is amended by a. Adding paragraph (a)(8); and b, /Revising paragraph (b)(1), ...

Comment:
The proposal to add paragraph (a)(8) (ii) (All commodities controlled under ECCNs 6A002) places extraordinary restrictions are US manufacturers. This will place undo economic restraints on dealing with the US's closest technological neighbor (Canada). Canadian instrument manufacturers will re-evaluate the extra trouble in dealing with US manufacturers compared to international vendors whom do not place additional burdens on their supply chain. This rule further confuses rather than developing straight-forward regulations that do not harm trade.

10. Section 744.9 is amended by revising the heading and paragraphs (a) and (b) to read as follows:

744.9 Restrictions on certain exports and reexports of certain cameras, systems, or equipment.

Comment:
The proposal subsection (a) describing *General Prohibitions* and (b) *Additional prohibition on exporters or reexporters informed by BIS.* These restrictions to '9 Hertz' uncooled thermal imaging cameras (UTIC) do not take into consideration the recent development of uncooled thermal imaging cameras (based on ECCN 6A003.b.4.b) as an accessory to the "Smartphone". Global vendors FLIR (USA), Seek Thermal (USA), i3systems (Korea), and Opgal's Therm App (Israel) are currently or are in the process of selling these 9 Hertz uncooled thermal imaging cameras that are directly connected to a Smartphone. These 9 Hertz cameras are sold directly through vendors such as Amazon, Best Buy, Home Depot, Walmart, etc. as well as their own websites without any reference to CCL/ITAR. The original 'UTIC Rule' was designed to accommodate US manufacturers in the commercialization of the thermal infrared spectrum without the stringent requirements on obtaining a license for a 6A003 commodity. During the intervening nearly six years, substantial progress has been made in this aforementioned commercialization. It is unrealistic to attempt to control the 9 Hertz thermal camera because it might be used for a military application

A much quoted American idiom fits the current state of the uncooled thermal imaging camera operating at a frame rate less than or equal to 9 Hertz: the US government is trying to 'close the barn door after the horse has bolted'. The industry has been successfully commercializing this commodity for over five years.

12. Section 772.1 is amended by adding a definition for "permanent encapsulated sensor assembly" in alphabetical order to read as follows:

§772.1 Definitions of terms as used in the Export Administration Regulations (EAR).

• • • • •

Permanent encapsulated sensor assembly. (Cat 6) A permanent encapsulated sensor assembly (e.g. sealed enclosure, vacuum package) containing an infra-red focal plane array (IRFPA) that prevents direct access to the IRFPA, disassembly of the sensor assembly, and removal of the IRFPA without destruction or damage to the IRFPA.

Comment:
This new definition 'permanent encapsulated sensor assembly' is appropriate terminology describing the IRFPA. Key requirement is the prevention of 'direct access' to the focal plane array. The elements (array and/or readout integrated circuit (ROIC)) comprising the IRFPA are not accessible without permanent damage.

18. InSupplement No.1to part 774, Category 6, ECCN 6A002 is amended by:
   a. Revising the Control(s) table in the License Requirements section;
   b. Removing the "Special Conditions for STA" section;
   c. Revising the Related Controls paragraph of the List of Items Controlled sections
   d. Revising paragraphs a.2 and a.3 in the Items paragraph of the List of Items Controlled section. The revisions to read as follows:

6A002 Optical sensors and equipment and "components" therefor, as follows (see List of Items Controlled).

Comment:
The List of Items Controlled paragraph a.3 (Non-'space-qualified' focal plane arrays') has a new 'Note 3' referencing the 'permanent encapsulated sensor assembly'. The active focal plane array elements comprising 6A002.a.3 that are not permanently encapsulated in a sensor assembly are classified ITAR. From this analysis, any 'permanently encapsulated sensor assembly' is classified as a CCL item. This is a positive step with respect to commercial IRFPA based infrared cameras. The IRFPA can not be tampered such that a change in its intended performance is achieved. An example would be changing the readout integrated circuit (ROIC) to allow performance outside the IRFPA manufacturer's specifications.

28. In Supplement No. 1 to part 774, Category 6, ECCN 6A993 is amended by revising the Related Controls paragraph in the List of Items Controlled section, to read as follows:

6A993 Cameras, not controlled by 6A003 or 6A203, as follows (see List of Items Controlled).

Related Controls: (1) See ECCN OA919 for foreign made military commodities that incorporate cameras described in 6A993.a that meet the criteria specified in Note 3.a to 6A003,b,4.b (i.e., having a maximum frame rate equal to or less than 9 Hz). (2) Section 744.9 imposes license requirements on cameras described in 6A993.a as a result of meeting the criteria specified in Note 3.a to 6A003.b.4.b (i.e., having a maximum frame rate equal to or less than 9 Hz) if being exported, reexported, or transferred (in-country) for use by a military end-user or for incorporation into a commodity controlled by ECCN OA919.

Comments:

Although this revision to ECCN 6A993 is referenced toward military commodities, it could have the unintended consequence to restrict the global commerce of 'thermal cameras' based on ECCN 6A003.b.4.b, and the original 6A993 classification. The camera manufacturer does not know whether the item will be used as a military commodity. The global resellers of the 6A003.b.4.b IRFPAs based cameras developed for the Smartphone market do not have the capability to regulate this market. This is a success story between BIS and Industry. The BIS spent considerable time and effort working with original equipment manufacturers (OEM) that a reduced frame rate microbolometer based thermal camera could be separated from the 30 Hz and higher frame rate cameras governed by ECCN 6A003.

Attachments:
1. FLIR-ONE-GEN2_Android-iOS (USA)
2. Therm-App by Opgal- Sales Brochure (Israel)
3. i3 Systems-Prototype Uncooled Thermal Imaging Camera for Smartphone (Korea)
4. Seek Thermal-Uncooled Thermal Imaging Camera for iPhone and Android (USA)

Addendum: Permanent Encapsulated Sensor Assembly

The clarifications of the EAR/USML items that are undergoing "rule changes" are critical to identifying components. This comment discusses the "sensor" for the proposed amendment to ECCN 6A002 and the revision of the Category XII USML describing "encapsulated focal plane arrays" modules. Infrared Focal Plane Arrays (IRFPA) are categorized into two geometries: linear array (1-dimensional) and area array (2-dimensional). These two items are divided into a "stand-alone" photodiode array, a "stand-alone" photodiode array with a "stand-alone" discrete readout integrated circuits (ROIC), and a hybridized photodiode array physically attached via indium solder to a Si ROIC. These "IRFPA components" are integrated into a "permanent encapsulated sensor assembly" module. Several examples illustrating the area (imaging) array and linear (spectroscopy) array are attached. The end-user is unable to change the photodiode array or readout integrated circuit without damaging the IRFPA module. This sensor assembly should be classified within the Commerce department's CCL. It would not be within the USML guidelines (unless specially designed). An IRFPA that is not permanently encapsulated would be classified under ITAR control. The first graphic illustrates the photodiode array wafer processed into individual die, and a photograph showing the readout integrated circuit wafer (ROIC). The user could select an optimized photodiode array and to an optimized ROIC; thereby side stepping the proposed rule. These would fall under the USML ITAR designation.

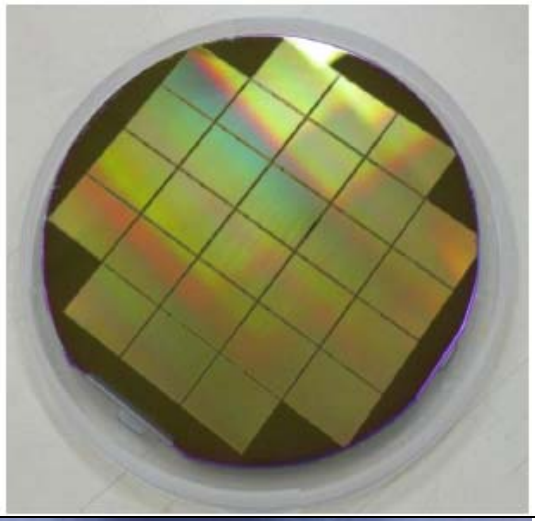	A 100 mm diameter InP wafer with 26 sensors diced into a 1280 x 1024 InGaAs/InP area photodiode array (PDA). The bare die can be hybridized to any suitable ROIC. This provides the condition for ITAR control.
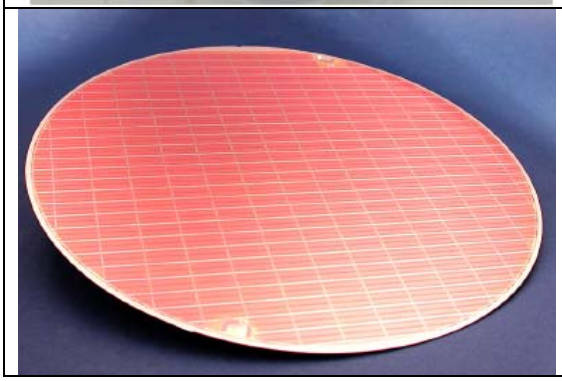	A 152 mm diameter Si wafer with readout integrated circuits (ROIC). This Si wafer is diced into ROIC chips. The bare die can be hybridized to any compatible two-dimensional photodiode array. These items fall into ITAR control.

The subsequent graphics illustrate the “permanent encapsulated sensor assembly” for the linear and area focal plane array.

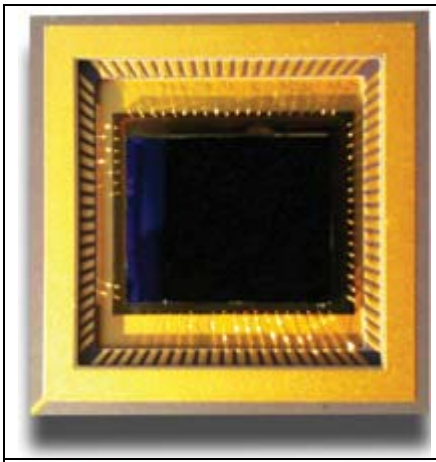	Xenics (Belgium) XFPA-1.7-640: InGaAs SWIR photodiode array hybridized to Si ROIC and permanently encased to a leadless chip carrier (LCC). The user does not have individual access to either the photodiode array or ROIC.
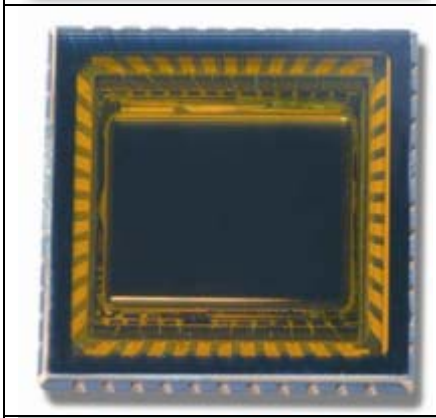	Chunghwa Leading Photonics (Taiwan) graphic illustrating its two-dimensional InGaAs SWIR photodiode array hybridized to a Si ROIC. This IRFPA is classified as a ‘permanently encapsulated sensor’ in an LCC module.
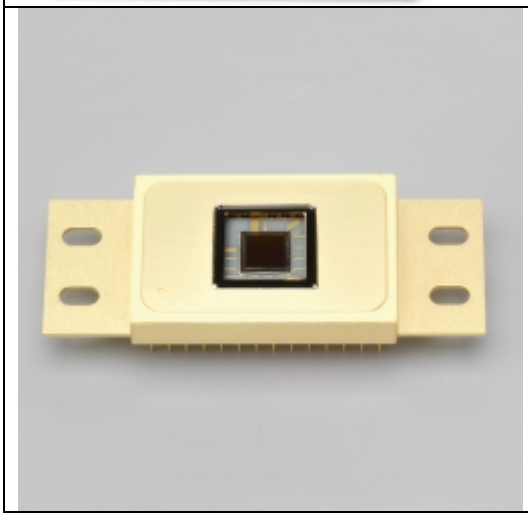	The Hamamatsu (Japan) model G11097-0707S is a two-dimensional InGaAs SWIR photodiode array hybridized to a Si ROIC. The IRFPA is hermetically sealed in a metal dual inline package (DIP) illustrating the ”permanent encapsulated sensor assembly” format. The user does not have direct access to the IRFPA without destroying it.

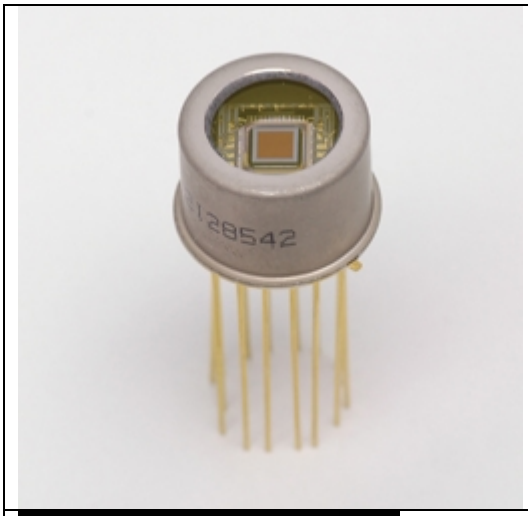	The Hamamatsu (Japan) model G12242-0707W is a two-dimensional InGaAs SWIR photodiode array hybridized to a Si ROIC. The IRFPA is hermetically sealed in a TO-8 package. This illustrates the 'permanent encapsulation sensor assembly' construction. The user does not have access to the IRFPA without destroying the item.
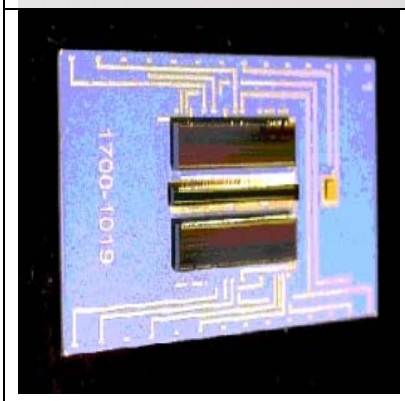	The Sensors Unlimited (USA) Linear photodiode array (PDA) (center) and two ROICs bonded onto a ceramic carrier. This is an example of the stand-alone PDA and stand-alone ROIC. These elements are permanently bonded to the ceramic substrate. Neither the photodiode array (PDA) nor the ROIC can be removed.
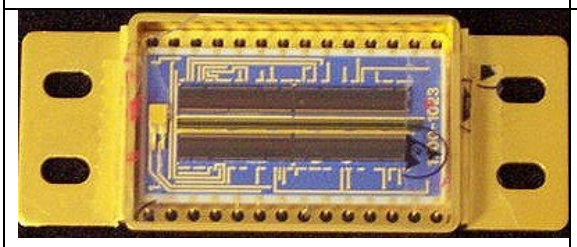	The Sensors Unlimited (USA) Linear photodiode array (IRFPA) submount attached to 14-pin dual inline package (DIP). The IRFPA is fixed within the DIP. The user has no ability to individually change elements without permanent destruction.
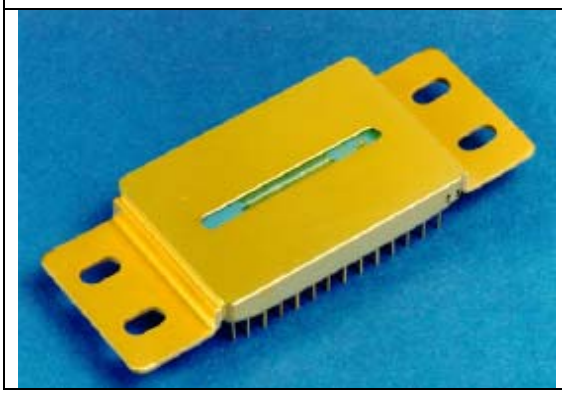	The Sensors Unlimited (USA) 'permanently encapsulated sensor assembly' employing an InGaAs IRFPA assembly. The internal components can't be accessed without catastrophic damage to the IRFPA.

FLIR ONE F.A.Q.

What is the FLIR ONE?

Available in two new second generation models mid year, FLIR ONE is a thermal camera that attaches to Android or iOS devices that visualize the otherwise hidden world of heat. Equipped with an enhanced Lepton thermal camera core, the FLIR ONE combines visible and thermal images together using a patented technology called MSX to make the thermal image crisper and more recognizable. Everything around us is either emitting or reflecting thermal energy and with the ability to see it and measure it on a mobile device, we can interact with and understand it in useful, interesting and fun ways. FLIR ONE extends human vision. It is the new sixth sense.

How are the new FLIR ONEs better than the original?

Available in either iOS or Android hardware versions, FLIR ONE features:

- A more powerful thermal sensor with four times the resolution for crisper and clearer thermal images.
- Automatic tuning. There is no need to manually tune the device for optimum use.
- A lighter-weight design that is less than a third the weight of the original.

The device retains its own dedicated battery and has the side-by-side visible and thermal cameras. When combined through MSX, the software dramatically increase a user's ability to interpret a thermal image in real-world environments.

How should I refer to the new FLIR ONE?

Two new second-generation FLIR ONE models will be available. One compatible with Android phones that use the Micro USB interface, and one for Apple iOS devices that use the Lightning connector. These products will be known as ***FLIR ONE for Android*** and ***FLIR ONE for iOS***, respectively. Refer top the original FLIR ONE as the first generation FLIR ONE.

FLIR
© 2015 FLIR Systems Inc. All Rights Reserved
iphone is a trademark of Apple Inc.., registered in the U.S. and other countries.

What is the price point of FLIR ONE?
FLIR ONE is available worldwide for MSRP $249.99 U.S.

What is the launch date of the next-generation FLIR ONE? When will it ship?
As of June 25, 2015, the FLIR ONE is available for purchase worldwide through FLIR.com/FLIRONE.

How can I purchase FLIR ONE?
In addition to purchasing through FLIR.com/FLIRONE, availability at Amazon, Apple.com and BestBuy.com is expected in July followed by worldwide a roll out in major retailers during the calendar-year third quarter, including The Home Depot and Best Buy.

I'm a dealer/store owner and would like to sell FLIR ONE. Who do I contact?
If you are interested in becoming a channel partner for FLIR ONE, please contact Keith Geck at Keith.Geck@FLIR.com.

Which mobile devices are compatible for use with this generation of FLIR ONE?
The latest generation of FLIR ONE is compatible with Android products with a micro-USB and Apple products with a lightning connector, including the Nexus 6, Samsung Galaxy S6, iPhone 6, 6 plus and iPad, among other devices.

With this new version, how long will you offer the FLIR ONE case for iPhone 5/5s?
The FLIR ONE case will continue to be offered for sale through FLIR.com. We will provide guidance on how long we will continue to sell the first generation FLIR ONE at a later date.

What is FLIR doing to encourage app development?
The FLIR ONE Developer Program is an entire campaign dedicated to enabling developers to create innovative and useful apps for the FLIR ONE. Developers are encouraged to join the program to gain access to FLIR ONE development tools, resources and training to become a FLIR Certified Developer. The new FLIR Approved Applications program gives developers access to additional resources and tools to make their apps as compelling as possible and gives consumers some assurance that apps bearing the FLIR Approved Applications badge have been reviewed by FLIR and deliver thermal imaging benefits to consumers.

Where can I get the FLIR ONE SDK?
An updated FLIR ONE SDK for the iOS platform is available at http://www.flir.com/flirone/developer, which is compatible with the original FLIR ONE and the new FLIR ONE for iOS. A new SDK for FLIR ONE for Android is in beta now and will be publicly available in July. With the FLIR ONE SDKs, developers have access to absolute temperature data for all pixels and control the Lepton camera's shutter mode, in both manual and automatic settings.

For information on this program, contact Cal Loo at cal.loo@flir.com.

FLIR
© 2015 FLIR Systems Inc. All Rights Reserved
iphone is a trademark of Apple Inc.., registered in the U.S. and other countries.

What other benefits does FLIR provide the developer community?
The FLIR Certified Developer program offers interested developers specific training in thermal imaging technology and the use of the FLIR ONE developer tools, as well as additional technical and business support to bring apps to market. Once certified, the developers can market themselves as FLIR Certified Developers using the FLIR Certified Developer badge (below). The developer may also be included in the FLIR Developer Universe featured on the FLIR developer website in addition to being eligible for app development business leads from FLIR.

The FLIR Approved Applications program offers developers access to additional resources and tools to make their respective apps as compelling as possible. It also provides consumers assurance that apps bearing the FLIR Approved Application badge have been reviewed by FLIR for quality and value.

Those apps that qualify may be marketed using the FLIR Approved Application badge (below) and may be included in the FLIR ONE applications gallery on the FLIR developer website and included in the "Feature App" listing. Additional benefits include the possible complementary promotion on FLIR.com and FLIR-owned social media channels.

While FLIR can't assume responsibility for the apps developed by any independent developers, this program offers consumers assurances that apps bearing the FLIR Approved Applications badge are of good quality and offer thermal imaging value to customers.

What is FLIR doing to recruit developers to the FLIR Developer Program?
FLIR recently launched the "Bring the Heat" event campaign, which is a series of hacker and maker challenge events set around the world. At these events, software developers come together in the spirit of collaboration and competition to brainstorm thermal imaging-related ideas and to evolve them into real applications for cash and product prizes. FLIR provides the venue, the hardware and software tools along with mentoring and technical support. Developers provide the smarts, the ingenuity and passion to create great apps.

For more information, check out the events page at http://www.flir.com/flirone/developer.

What if I can't physically attend and participate one of the "Bring the Heat" hacker challenge events?
We want to include and encourage developers all over the world to bring their creative ideas and skills to FLIR ONE. In the near future is launching a global, online Bring the Heat hacker challenge. Developers will be able to register on ChallengePost, develop and test their apps using either a physical FLIR ONE device or an online simulator, and submit their respective apps online to compete for cash and product prizes.

Stay tuned for more information at http://www.flir.com/flirone/developer.

© 2015 FLIR Systems Inc. All Rights Reserved
iphone is a trademark of Apple Inc.., registered in the U.S. and other countries.

What apps will be available for use with FLIR ONE?
The primary FLIR ONE app has been updated with the introduction of the new FLIR ONE models and is available for free download on the Apple App Store and the Google Play Store. Additionally, FLIR is working with multiple flagship developers through the FLIR Developer Program to create apps that address specific user groups with features and capabilities that suit a variety of needs.

Some examples of the many new apps that are or will soon be available, include:

- **Comfort Tracker:** guides homeowners and professional contractors through a home energy assessment to identify opportunities to improve comfort and efficiency by recommending solutions and identifying local retailers of Owens Corning insulation.
- **Manything:** a free app that turns spare iOS devices into video monitoring cameras and has integrated the FLIR ONE to enable remote thermal vision, temperature triggered alerts and thermal motion detection, even in total darkness.
- **Zombie Vision:** turns your FLIR One enabled mobile device into a fun, real-time Zombie locator.
- **Everfave:** Innovative iOS and Android app for consumers to discover and share recommended businesses and pros. Consumers earn rewards for sharing their experiences and recommendations with their friends.
- **Infrahorse:** aides horse enthusiasts in determining 'hotspots' or asymmetry in a horse's legs, hooves or back that may denote a potential health issue.

What would I use FLIR ONE for?
Thermal imaging makes the otherwise invisible world of heat energy visible to your eyes. Everything around you either emits or reflects heat energy. For example, with FLIR ONE, when you look around a room in your home, you can see where doors and windows are not well insulated. You might see a wall switch is slightly warm that could indicate a pending problem or overloaded circuit. The list of uses is long and will grow dramatically as customers discover this unseen portion of the electromagnetic spectrum. Visit FLIR.com/FLIR ONE for educational information on how thermal imaging can and will be useful in everyday life, and discover this previously invisible world first-hand.

I'm concerned about privacy. Can someone use FLIR ONE to spy inside my home or underneath clothes?
FLIR ONE does not provide x-ray vision. It allows you to visualize and measure the surface temperate of most objects. In many cases, the surface temperature of an object can be affected by things behind or under the surface. For example, under certain conditions the surface temperature of a wall can be subtly affected by the wooden studs behind it. This characteristic can allow you to easily see the location of the studs behind the wall, without actually looking through the wall.

Aren't you concerned FLIR ONEs can be used to steal personal information? Like an ATM pin code?
With any new technology in the hands of consumers, there is a chance it will be used in unintended ways. At FLIR, our heritage is to provide the world's most advanced thermal imaging technology for public safety, environmental protection and to enhance our daily lives. Therefore, we take personal security very seriously.
The purported ability to steal pin codes with thermal imaging cameras, such as at ATMs, requires very specific conditions and circumstances making such a scenario highly unlikely. Regardless, we recommend practicing prudent identity protection measures to ensure personal data remains secure no matter the situation.

© 2015 FLIR Systems Inc. All Rights Reserved
iphone is a trademark of Apple Inc.., registered in the U.S. and other countries.

What is the indoor/outdoor range of FLIR ONE?
At about 100 feet, you can see the heat signature of a person. However, atmospheric conditions can influence the visible range. Dry, clear weather will provide a greater range than rainy, foggy, or humid conditions as water in the atmosphere can absorb infrared radiation before it reaches the sensor.

What is the resolution of the camera?
Resolution is often synonymous with image quality, but in reality, resolution is one of many factors that determine thermal image quality. The new FLIR ONE's more powerful Lepton thermal camera has been upgraded to generate image quality equal to or better than the original in every respect. When combined with the VGA visible camera, FLIR ONE creates a crisper and clearer 640x480 image than ever before. This is achieved with FLIR's patented two-camera MSX™ Technology, which embosses a visible image onto the thermal image without eliminating any thermal information, greatly enhancing the perceived resolution and detail of the thermal image.

How does MSX blending work?
FLIR developed MSX blending as a proprietary and patented technique to improve image quality. It dramatically increases a user's ability to interpret a thermal image in real-world environments by adding visible edge detail to a thermal image without sacrificing detail. MSX is additive in that no thermal information is lost, greatly enhancing the perceived resolution of the thermal image. However, MSX only works in conditions where visible light is present. In dark conditions, turn on the companion-device flashlight to generate light.

Does the FLIR ONE require frequent manual tuning of the shutter to ensure the best experience?
No. The new FLIR ONE now features automatic tuning and thus will not require the user to periodically reset the thermal sensor.

What is the operating temperature for the FLIR ONE?
FLIR ONE operates at 32°F to 95°F (0°C to 35°C). It also features an enhanced scene temperature range of -4°F to 248°F (-20° to 120°C), a 40°C increase in range from the predecessor device.

Will there be a new FLIR ONE that wraps around my mobile device like the previous version?
Because this generation of FLIR ONE is a small and lightweight attachment to mobile devices through either a micro-USB (Android) or a lightning connector (Apple), it provides the user flexibility to use FLIR ONE with multiple device types.

How is the new FLIR ONE powered? Will it drain my tablet/smartphone battery?
No. The attachment includes an internal battery, ensuring that the FLIR ONE won't drain the respective battery of the attached device.

The FLIR ONE adds some bulk and weight to the mobile device. Will it still fit in a pants pocket?
FLIR ONE weighs just 2.75 ounce (~30 grams), which is less than a third the weight of the predecessor. With its small and lightweight form factor, it adds just 0.7 inches (18 mm) of depth and about 2.8 inches (72 mm) in length when attached to an Android smartphone or the iPhone 6, as examples.

FLIR
© 2015 FLIR Systems Inc. All Rights Reserved
iphone is a trademark of Apple Inc.., registered in the U.S. and other countries.

Therm-App
more to see.

ANDROID THERMAL IMAGING DEVICE

Unparalleled combination of excellent performance and affordability in a portable, lightweight device

Why Stay in the Dark?

Therm- App™ improves effectiveness in the field, providing clear images in total darkness — delivering mission critical information which can save lives. The compact and lightweight camera with interchangeable lenses enables users to record and immediately share high-quality thermal images and videos. Connecting to most Android smartphones, it offers superb image quality and low power consumption.

Long range detection

Detect human size targets up to 500m
Detect vehicle size targets up to 1,500m

Interchangeable Lenses

Therm-App™ offers a variety of lenses to match specific operational needs. Currently available: 6.8/13/19/35mm lens options.

Modular

Compatible with head-mounts, tripods, handles and other standard 1/4"-20 mounts.

Improve situational awareness and enhance safety with long-range detection and recognition capabilities.

Security

See the unseen while on routine perimeter patrol, securing a facility, or identifying potential threats in dark or badly lit areas. It's easier to control and secure a perimeter, by obtaining clear images of people, animals, or vehicles at the scene.

Law Enforcement

Improve situational awareness and enhance safety while on patrol, responding to distress calls, exiting patrol vehicles, and entering buildings. Identify perpetrators trying to avoid detection or fleeing the scene.

Wildlife

Obtain a clear view of animals in the wild, irrespective of lighting or weather conditions— through high grass, dense brush, or forested areas.

Search and Rescue

Locate injured or unconscious people on land or in water, in any weather or environmental conditions such as fog or smoke. Detect signs of life even in thick foliage or wooded areas, day or night.

Therm-App™ Technical Specifications

Smartphone	
Minimal Requirements	Android 4.1 and above, supporting USB OTG
Hardware	
Imager	384 x 288 microbolometer LWIR 7.5 -14um
Optics	6.8mm lens (55° x 41°) 13mm lens (29°x 22°) 19mm lens (19°x14°) 35mm lens (11° x 8°)
Focus	Manual, 0.2m to infinity
Frame Rate	8.7Hz
Weight	138 grams / 4.86 ounces
Size	55 x 65 x 40mm (2.16 x 2.55 x 1.57in)
Operating Temperature	-10°C to +50°C (14°F to +122°F)
Storage Temperature	-20°C to +50°C (-4°F to +122°F)
Power Supply	No battery, 5V over USB OTG cable, power consumption < 0.5W
Certifications	CE, FCC, RoHS
Encapsulation	IP54
Mount/Handle	Ergonomic handle, using 1/4"-20 standard tripod mount
Device Attachment	Clip-on for smartphone (5 -10cm span)

Measurement	
Resolution	384 x 288 pixels (>110,000 pixels)
Accuracy	+/- 3°C or 3% (@25°C)
Sensitivity	NETD <0.07°C
Temperature Range Calibration	5 – 90 °C
Software	
Viewing Modes	• Night Vision • Thermography (Basic)
Output	Video & Audio (h.264), Snapshot
Instant Share	Email, SMS
Android Share	Via media gallery
Color Palettes	Hot White / Hot Black / Iron / Rainbow / Grey / Vivid
Zoom	Continuous digital zoom using touchscreen
Software and feature updates	Yes (via Google Play)
Maintenance	Bad pixel repair ulitity

At night, or in poor visibility conditions, Therm-App™ gives you the full picture.

â† 3rd Gen MicroCAM Infrared Thermal Imaging Core

FLIR A6200SC Short Wave Infrared (SWIR) Camera â†'

Prototype Low Cost Smartphone Thermal Imager

Posted on 24/04/2015 by Editor

i3system Shows Hi-Res Device at SPIE-DSS 2015

Thermal Expert Prototype
At SPIE.DSS 2015

Baltimore MD, USA â€" i3system showed a prototype high resolution (>110,000 pixels) Smartphone LWIR Thermal Imager named ***â€œThermal Expertâ€.***

It appears intended to compete with the FLIROne and Seek Thermal products already on the market.

i3system already produce LWIR microbolometers in-house with 384X288 @ 25 Âµm pitch having NETD of <50 mK.

Their LWIR engine reportedly draws less than 3 Watts.

Search The MeasurementMedia Network

Google™ Custom Search

Search

Global Spec The Engineering Search Engine

Moisture Sensor

- About Temperature Sensors
- METEO-TECHNOLOGY
- Moisture Articles
- TempSensor Directories

Recent Articles

- FLIRâ€™s new long-range pan/tilt thermal security camera
- National Guard of Virginia relies on photovoltaics monitoring by Lufft
- 2015 DrySyn Classic Heating Block
- Cooled Vs Uncooled Infrared Thermal Imaging Cameras
- Testo at Appetite for

Numbers like $500 per unit with more than 3 times the 32 K pixels of the ~$250 Seek Thermal and were heard resonating on the Expo floor.

i3system Thermal Expert (right) on Smartphone

Could be some more bang for the buck than the lower-priced and lower performance devices already out there. Just check the image on the iPhone to the left!

The next year should see some very interesting developments, to say the least!

i3system is no lightweight in the field of thermal imaging.

They have been developing and selling high-tech imaging sensors in Korea for more than 15 years.

They now also are expanding their commercial business with IR detector and camera electronics for satellite and other applications.

i3system, Inc, founded in 1998, has developed capsule endoscope for medical use and cooled infrared detectors for thermal imaging cameras for Korean military use. We later expanded our business to X-ray imaging detectors for dental X-ray imaging equipments such as panoramic and cephalometric systems. i3system, inc. is officially designated as a military product contractor for Korean military since 2010 by Korean government.We also develop and manufacture uncooled IR detectors for uncooled thermal imaging cameras for commercial products such as security, surveillance, radiometry devices and night vision systems as well as military product for personal rifle of Korean Army. Our products for military use include IR scene projector, real time scene simulator, IR camera and laser detector.

Headquarters/Factory:
69, Techno 5-ro
Yuseong-gu
Daejeon
Korea

Research Center:
26-32, Gajeongbuk-ro
Yuseong-gu

engineering 2015
- Bangkok tightens measures against spread of Mers
- NEW PyroCube Precision Infrared Temperature Sensor

Meetings, Publications, Standards, Ed & Training

A Fully Nonmetallic Gas Turbine Engine Enabled by Additive Manufacturing, Part II: Additive Manufacturing and Characterization of Polymer Composites
27/06/2015
06/26/2015 "A2LA Today" - June 2015
27/06/2015
A Standards in Trade Workshop on China Brown?elds Remediation
26/06/2015
NIST-led Effort Yields New International Standard for Dynamic Liquid Measuring Systems
26/06/2015
Role of Tropical Atlantic SST Variability as a Modulator of El Nino Teleconnections
26/06/2015
High Throughput Media Preparation at The Institut Curi
26/06/2015
Sensors, Vol. 15, Pages 15067-15089: An Efficient Biometric-Based Algorithm Using Heart Rate Variability for Securing Body Sensor Networks
26/06/2015
EU Environmental Technology Verification (EU-ETV) Workshop
26/06/2015

Daejeon
Korea

Tel : +82 70 7784 2506
FAX : +82 42 931 2555

Sales Division :

* General Manager: Doo Yuong, Kwak
* Sales Rep: Jimmy Kim
* Tel: +82 42 360 2503
* E-mail: marketing@i3system.com
* Website:http://i3system.com/eng/

Posted in Applications, Display, News, Night Vision, Non-Contact Sensors, Thermal Imaging, Vendors Tagged high resolution-low cost thermal imager for smart phone, i3 system, thermal expert
permalink

â† 3rd Gen MicroCAM Infrared Thermal Imaging Core

FLIR A6200SC Short Wave Infrared (SWIR) Camera â†'

Leave a Reply

Your email address will not be published. Required fields are marked *

Name *

Email *

Website

Comment

Notify me of new posts by email.

Post Comment

D3448 Standard Test Method for Specific Aqueous Conductance of Trichlorotrifluoroethane has been editorially changed, available as D3448-10(2015)e1
25/06/2015

D5176 Standard Test Method for Total Chemically Bound Nitrogen in Water by Pyrolysis and Chemiluminescence Detection has been reapproved, available as D5176-08(2015)
25/06/2015

Sponsor

Categories

Select Category

Archives

Select Month

Re: Temps /RH

Global Temperatures | Global Warming, is it Real?
IMPROVING HUMIDITY MEASUREMENTS IN METEOROLOGY
Measuring Moisture in Wood
The Significance of

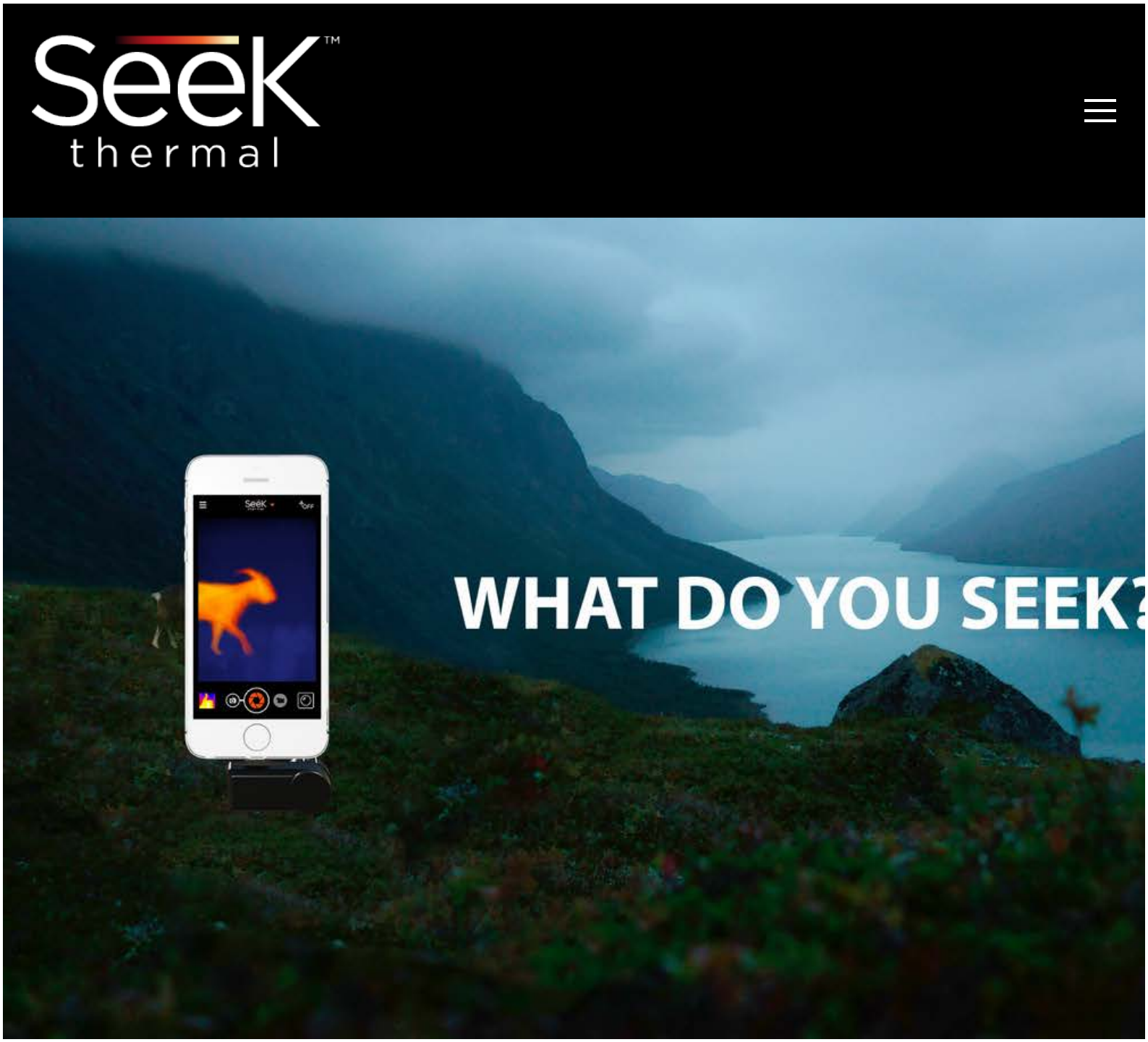

Seek Thermal Camera

With its wide field of view, the original Seek Thermal camera is perfect for use indoors and around the house.

This camera allows:

- **Contractors** to see water damage, air leaks, missing insulation, and other energy inefficiencies

- **Home owners** and DIYers to conduct a home energy audit to help save on their energy bill
- **Plumbers** to detect water leaks and clogs
- **Electricians** to identify electrical shorts, loose wiring, and other safety hazards
- **Pet owners** to locate lost pets at night or in obscured visibility conditions

206 x 156 Thermal Sensor

36° Field of View

-40C to 330C Detection Range

Protective Waterproof Case

BUY FOR IPHONE

BUY FOR ANDROID

Seek Thermal XR - Xtra Range

The Seek XR is an extended-range version of our award-winning thermal camera. With nearly twice the magnification, the Seek XR lets you see objects at greater distances with the same clarity and resolution as the original Seek camera.

206 x 156 Thermal Sensor

20° Field of View

-40C to 330C Detection Range

Protective Waterproof Case

BUY FOR IPHONE

BUY FOR ANDROID

This model is ideal for:

- **Hunters** to track game, scout terrain, and follow bloodtrails
- **Boaters** to detect harmful objects on the water at night
- **Campers** to quickly scan around a campsite for dangerous animals
- **Electrical Engineers** to inspect components, circuit boards and assemblies
- **Anyone** looking for increased home security can detect intruders from nearly 1,800 feet away

---

Camera Specs

Seek Thermal Specs

- 36Âº Field of View
- Fixed Focus
- Resolution: 206 x 156 Array
- -40C to 330C Detection
- < 9Hz
- Long Wave Infrared 7.2 â€“ 13 Microns
- 12 Âµ Pixel Pitch
- Vanadium Oxide Microbolometer
- Chalcogenide Lens

Seek Thermal XR Specs

- 20Âº Field of View
- Adjustable Focus
- Resolution: 206 x 156 Array
- -40C to 330C Detection
- < 9Hz
- Long Wave Infrared 7.2 â€“ 13 Microns
- 12 Âµ Pixel Pitch
- Vanadium Oxide Microbolometer
- Chalcogenide Lens

Magnesium Housing
- Protective Waterproof Case

Magnesium Housing
- Protective Waterproof Case

Check your **phone compatibility** here.

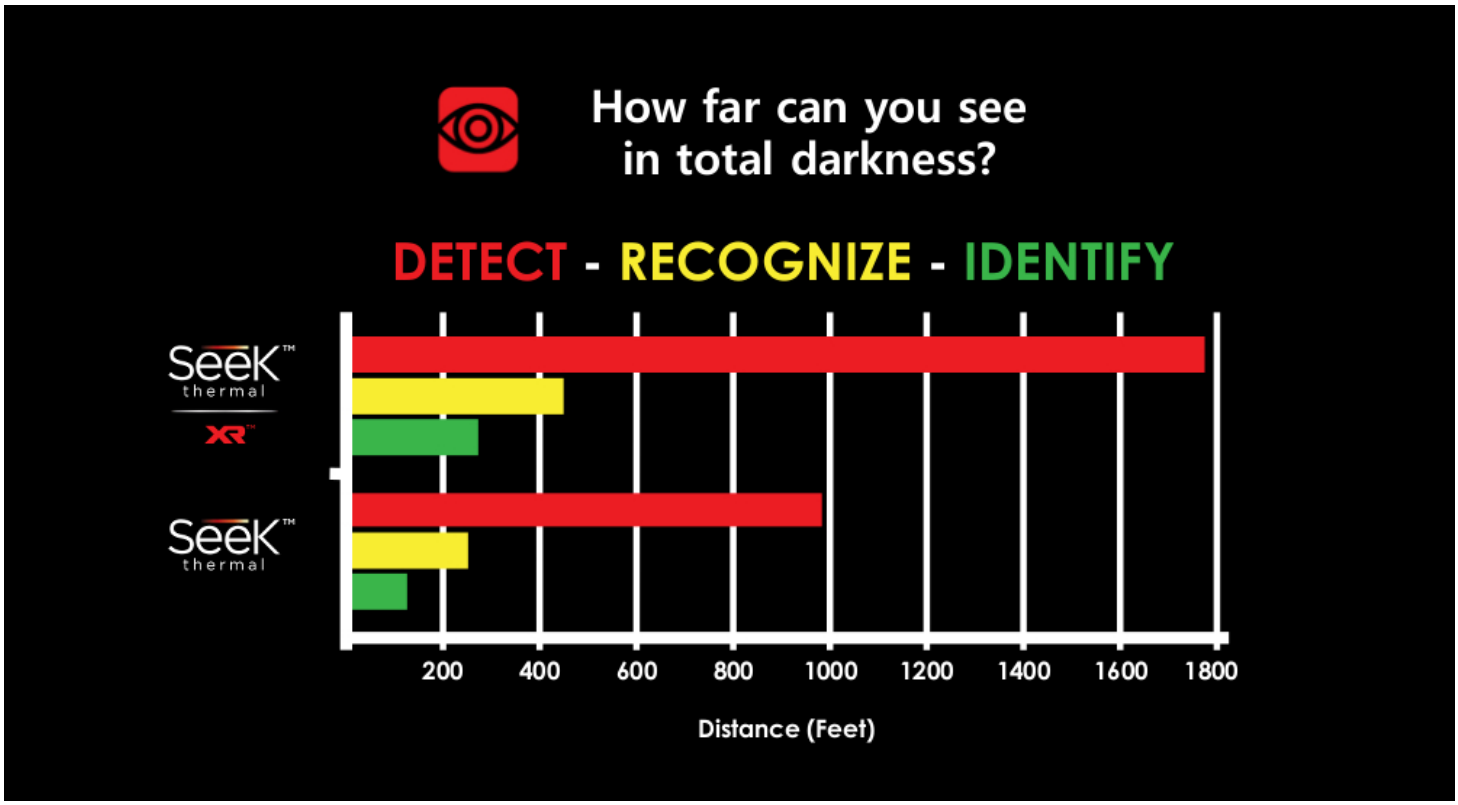

PRESS

BLOG

PRIVACY POLICY

WARRANTY

LEGAL

DEVELOPERS

ABOUT

CAREERS

CONTACT

Copyright 2015, Seek Thermal, Inc.

Armasight Inc.
815 Dubuque Avenue,
South San Francisco,
CA 94080, USA
Phone: (888)959-2259
Fax: (888)959-2260
Intl Phone/Fax: (650)492-7755
www.armasight.com
info@armasight.com

July 6, 2015

Bureau of Industry and Security
U.S Department of Commerce
Via Email: publiccomments@bis.doc.gov

Subject: RIN0694-AF75

To Whom It May Concern:

Armasight, Inc. is a U.S. Manufacturer, Supplier and Exporter of Night Vision and Thermal Imaging devices including monoculars, binoculars, goggles, clip-on, and weapons sighting systems that are designed for both military and civilian applications. The majority of our night vision devices utilize image intensifier tubes (IITs), while our thermal imaging devices utilize IRFPA based thermal imaging cores. All are sourced from vendors, because Armasight does not manufacture core technology IITs or IRFPAs.

Armasight has reviewed the proposed changes to Category XII and the EAR, and while we see some additional clarity regarding the "bright line" between ITAR and non-ITAR controlled commodities, there remains a lack of clarity in many areas. We address below portions of the proposed rules, providing our assessment and suggestions for your review and consideration.

- **The Definition of a Weapon Sight, versus an Imaging Device Should Be Clarified**
    - We feel that it would be helpful to clearly define what constitutes a "weapon sight," as this term remains undefined, but triggers controls. Over the last few years, Armasight has received conflicting rulings and opinions from DDTC and BIS as what defines a "weapon sight." Some rulings and opinions have indicated that, to be a "weapon sight", the article must have aiming capability (e.g., reticles), while others have indicated that the ability to place the sight on a weapon, regardless of aiming capability, is sufficient to make an item a "weapon sight". The conflicting views on this definition have led to our receiving unique and unusual rulings, such as a CJ that resulted in EAR jurisdiction, but indicated that the item is to be treated as a 6A992 imaging device if shipped alone, but as a 0A987 "weapon sight" if shipped together with an EAR99 universal weapon mount accessory. The particular item in question also lacks the ruggedness to survive weapon shock, but the mere theoretical ability to attach the imager to a weapon was cited as the basis for such a ruling. This ruling is inconsistent with the plain reading of the regulations and presents unique challenges in classifications of future products and maintenance of appropriate controls. Providing a clear definition in part 772.1 or in an explanatory note, outlining the

Armasight Inc.
815 Dubuque Avenue,
South San Francisco,
CA 94080, USA
Phone: (888)959-2259
Fax: (888)959-2260
Intl Phone/Fax: (650)492-7755
www.armasight.com
info@armasight.com

specifications that would classify an article as a weapon sight, such as, "Unit must possess a fixed weapon mount, have an aiming reticle and user adjustable bore sighting capability, and be able to withstand weapons shock [at an appropriate performance parameter]" would eliminate some confusion within the industry and establish more consistent classifications for existent and future products.

- **GEN II Image Intensifier Tubes Should Not Be ITAR-Controlled**
  - Armasight sources all of its Generation II image intensification tubes from outside the United States, because there are no U.S. manufacturers of Gen II IITs. Foreign manufacturers include Photek, UK; DEP, Netherlands; Photonis, France; Harder Digital SOVA, Serbia; Bharat Electronics Ltd., India, along with 3-4 manufacturers in Russia and 2 in PRC. With no manufacturer of these commodities in the United States, the ITAR would be controlling foreign commodities brought into the United States that are distributed worldwide from the foreign manufacturers with little to no restrictions. Indeed, such controls serve more as an encouragement for U.S. companies to establish subsidiaries outside the United States to assemble and market such items, than they serve to protect the U.S. warfighter or preserve U.S. technological advantage.

  - We question Image Intensifier Tubes with luminous sensitivity exceeding 500 uA/lm being placed on the ITAR, as the photosensitivity of GEN II Image Intensifier Tubes at their highest level remains 3-4 times lower than the photosensitivity of the average GEN III Image Intensifier Tube. It is our opinion that GEN II IITs exceeding the 500 uA/lm threshold would be more appropriately placed in a 600 Series ECCN, or in 6A002, rather than on the ITAR, therefore placing the "bright line" at GEN III+ on the ITAR and GEN II and below as non-ITAR. We also think that 350 uA/lm is an outdated control on Gen II IITs, and the Wassenaar level should be raised to 500 uA/lm.

  - Additionally, we question the need for worldwide license requirements and elimination of license exception eligibility for GEN II IITs controlled by 6A002 (i.e., those with a luminous sensitivity exceeding 350uA/lm). Such controls would prevent Armasight from importing 6A002-equivalent IITs from suppliers in countries such as Ukraine, China or Serbia, into the United States for testing and quality control, then re-exporting them under STA to an assembler in an STA-eligible country. This reduces our flexibility in terms of where we can assemble our products where GEN II IITs can be exported from the foreign manufacturers in Serbia, China, Russia, etc. with little to no restriction.

- **IRFPA Based Weapon Imaging Systems Subject to the ITAR**

Armasight Inc.
815 Dubuque Avenue,
South San Francisco,
CA 94080, USA
Phone: (888)959-2259
Fax: (888)959-2260
Intl Phone/Fax: (650)492-7755
www.armasight.com
info@armasight.com

- Armasight generally designs its IRFPA based Imaging Systems around third-party supplied IRFPA "Cores". The proposed ITAR control starts out by applying a bright line threshold of control over any Weapon Imaging Systems that incorporate an IRFPA with a peak response exceeding 1000 nm, which in turn could mean that Weapon Imaging Systems incorporating an EAR-controlled IRFPA would be controlled under the ITAR. We feel that this could lead to over control of, for example, weapons imaging systems incorporating 6A002 or 6A993 microbolometer IRFPAs that happen to have a peak response rate over 1000nm, but a frame rate at <9Hz. It does not make intuitive sense that the cores are subject to the EAR, but the end-item would be considered a defense article.

- The next control parameter includes the incorporation of any "article subject to this subchapter". This creates some interpretive difficulties, because the controls on bare IRFPAs, packaged IRFPAs, and cores incorporating packaged IRFPAs are not consistent. We assume that, if Armasight purchases a core from a vendor, we would only need to review the performance parameters of items controlled under XII(c)(12), and not "see through" to the controls applicable to IRFPAs called out in XI(c)(2) through (8). An explanatory note confirming that the "see-through" principle does not apply in these circumstances would be helpful. For example, there could be a note to XII(a)(2)(ii) that says "If the incorporated article is an IRFPA core, only the control parameters of XII(c)(12) are relevant to determination of ITAR control." Otherwise, it is possible that there could be confusion about whether incorporation into a Weapon Imaging Device of cores that are EAR controlled, but contain IRFPAs that would be controlled under the ITAR if not already incorporated into a core, would trigger ITAR control.

- There is further potential confusion and difficulty of drawing bright lines at the level of the Weapon Imaging System, because the controls on IRFPA cores set forth in XII(c)(12) include some items with FPAs that have a peak response below the 1000 nm threshold laid out in XII(a)(2)(i). For example. XII(c)(12)(i) includes certain shock-resistant cores with microbolometer IRFPAs exceeding 111,000 detector elements, but there is no specification of a peak response wavelength. XII(c)(12)(ii) covers a subset of microbolometer IRFPAs controlled under XII(c)(2) and (c)(5), which covers items that have a peak response rate between 900 nm and 30,000 nm, as well as having over 328,000 detector elements. Thus, there is a confusing interplay between the controls in XII(c)(i) and XII(c)(ii). On balance, while there is a hodgepodge of control parameters to consider, Armasight thinks it makes more sense to apply ITAR controls to IRFPA-Based Weapons Imaging Systems only if they incorporate an ITAR-controlled IRFPA, or more realistically, an ITAR-controlled core as listed in (c)(12), and not to superimpose a control that would apply ITAR control to all

Armasight Inc.
815 Dubuque Avenue,
South San Francisco,
CA 94080, USA
Phone: (888)959-2259
Fax: (888)959-2260
Intl Phone/Fax: (650)492-7755
www.armasight.com
info@armasight.com

Weapons Imaging Systems that incorporate an IRFPA with a peak response exceeding 1,000 nm, as that could impose ITAR control on Systems that incorporate EAR-controlled IRFPAs. If such EAR-controlled IRFPAs are not deemed sensitive enough to be subject to ITAR controls when exported by themselves, it doesn't make sense for Weapons Imaging Systems that incorporate them to be up-classified to the ITAR. We note that this would be consistent with the approach taken in Category XII(c)(13) for monoculars, binoculars, etc., although some of the interpretive difficulties mentioned above apply to the monoculars, etc., which generally incorporate vendor-supplied "cores", instead of integrating an IRFPA and custom read-out electronics.

- We do agree that applying ITAR controls to certain Weapon Imaging Systems that incorporate a ballistic computer for adjusting the aim point display is appropriate, but the way the control is written in Cat XII(a)(1)(iii) makes it unclear whether the control applies only to night vision capable Weapons Imaging Systems, or if it applies to daylight sights, which would fall under Category I. If the intent is to control only night vision devices in XII(a)(1)(iii), then an appropriate performance parameter or Note should be introduced, to avoid confusion about potential overlap with Category I items (either currently or after that Category goes through ECR).

- **EAR Controls on Weapon Imaging Systems Are Too Broad and Cover Items in Normal Commercial Use, the Order of Review Is Not Consistent with the Rest of the EAR, and Inconsistencies Between 0A987 and 600 Series Controls Lead to Unexpected Outcomes**
  - The EAR contains three potential ECCNs that could apply to non-ITAR night vision Weapon Imaging Systems: 0A987, 6A615.d, and 6A992. Based on the text of 6A615.d, which excludes items subject to 0A987, it appears that the order of review of these categories is first 0A987, then 6A615.d, then 6A992. This seems to diverge from the normal order of review laid out by BIS with respect to the CCL, as it is normally 600 series first, then all other ECCNs. An explanatory note in the Order of Review guidance may be helpful in avoiding confusion, because if one follows the normal order of review, 6A615.d would appear to cover all "weapon sights" operating between 700 nm and 1000nm but then the exporter is told that 6A615.d does not include items subject to 0A987, which could cause confusion about which ECCN to consider first.

  - We note, as an aside, that the lack of revisions to Category I still introduce confusion and lack of clarity between what is a "military" day sight and a non-"military" day sight subject to 0A987, and that the cross reference in Category I directing exporters to Category XII for controls on "night vision" military

Armasight Inc.
815 Dubuque Avenue,
South San Francisco,
CA 94080, USA
Phone: (888)959-2259
Fax: (888)959-2260
Intl Phone/Fax: (650)492-7755
www.armasight.com
info@armasight.com

riflescopes would need to be more specific in terms of performance parameters (e.g., peak response wavelength or wavelength of operation) to be clear about which are Cat I and which are Cat XII. Adoption of a consistent terminology (e.g., "weapons sights") across the categories would also be helpful." While we understand that reforms to firearms categories are politically controversial, reform of the non-firearms portions of Category I regarding weapons sights seems necessary to resolve this confusion, and could be done as a partial reform of Category I.

- If a night vision Weapon Imaging System is not subject to 0A987, then the exporter is supposed to consider 6A615.d. However, 600 Series ECCNs are supposed to apply to items that are inherently military in nature, and 6A615.d imposes controls simply based on the wavelength of operation, which imposes 600 series controls on items, such as clip-on night vision systems, that are currently in normal commercial use, and many of which have been classified as 6A992 items by BIS in the past. Applying a 600 series ECCN to <u>all</u> clip-ons that operate in the range of 700-1000nm is an overly broad control. Only such items that are ruggedized, meeting higher military-grade standards for shock and containing higher-performing optical elements should be subject to 6A615.d, in keeping with the objectives of ECR not to impose controls on items in normal commercial use, unless they confer some differential military advantage or are produced predominantly in the United States.

- Another confusing aspect of these multiple ECCNs is that 6A615.d's description of controlled items includes, among other things, "Weapon Sights," but then excludes any items controlled by 0A987. 0A987 describes several types of "sights": "Telescopic sights," "Holographic sights," "Reflex or "red dot" sights," "Reticle sights," and "Other sighting devices that contain optical elements." This is a fairly broad description of the types of weapon sights, but it is not clear whether BIS and DDTC intend to cover all non-ITAR infrared weapon sights under 0A987, or if there may be some other types of sights that would be controlled by 6A615.d, but from Armasight's perspective, that seems like a null set of items. If so, it would be clearer to drop the description "weapon sights" from 6A615.d, and just make a cross reference in the Related Controls note to indicate that all non-ITAR "weapons sights" are controlled under 0A987. If, however, the US Government intends to control some infrared "weapon sights" under 6A615.d, then either 0A987 should be revised to be clearer about what types of infrared sights are to be controlled and which are not. It is very difficult for exporters to determine which types of "sights" are controlled under 0A987, due to the vague descriptions, which forces the submission of CCATS requests to determine what is the correct ECCN.

- If we are correct that 0A987 is intended to cover all non-ITAR infrared weapon sights, and other types of Weapon Imaging Systems operating in the

Armasight Inc.
815 Dubuque Avenue,
South San Francisco,
CA 94080, USA
Phone: (888)959-2259
Fax: (888)959-2260
Intl Phone/Fax: (650)492-7755
www.armasight.com
info@armasight.com

wavelengths between 700 nm and 1000 nm are intended to be controlled under 6A615, there are some odd outcomes in terms of certain license requirements, since 0A987 controls do not overlap entirely with RS1 controls applicable to 6A615.d items.

0A987 was included in the EAR as a result of Firearms Convention and Crime Control requirements, and is subject to Crime Control, Firearms Convention, and United National Controls. While not expressly excluded from STA eligibility in 740.20(b)(2), like other 0A98X items, 0A987 is not, on its face, eligible for use of License Exception STA because, pursuant to 740.20(c)(1), it is subject to reasons for control other than NS, CB, NP, RS, CC or SI. 0A987 is subject to FC and UN controls, which go beyond what is listed in 740.20(c)(1) as being eligible for License Exception STA to A:5 countries.

That doesn't make a difference in most cases, because most A:5 countries are NLR destinations for 0A987 items. However, A:5 countries Argentina, Austria, Canada, Sweden and Switzerland require a license, and are not STA eligible. However, A:6 country Albania is an NLR destinations, while A:6 countries Hong Kong, India, Israel, Malta, Singapore, South Africa Taiwan require a license and are not STA eligible, because only NS-only items are eligible for STA to A:6 countries.

It would seem that night vision sighting devices would be perceived to be more sensitive than non-sighting Weapon Imaging Systems, but placing them in 6A615.d would apply a license requirement on a worldwide basis, although such items would be STA eligible for A:5 countries. Thus, 0A987 sighting devices can be shipped NLR to most A:5 countries and are eligible for APR, but less sensitive 6A615.d non-sighting devices would require additional STA assurances to go to the same countries and would not be eligible for APR. While not a major issue, it is also an odd outcome that 0A987 sighting devices would be able to go NLR to Albania, an A:6 country, but less sensitive non-sighting Weapons Imaging Devices, such as clip-ons, would require an individual license to Albania, because 600 series items are not eligible for STA to A:6 countries.

We recognize this complexity is due to the incomplete overlap between FC/CC/UN controls and NS/RS controls involving 600 series items, but these anomalies could be addressed by removing the license requirements for 6A615.d for 0A987 NLR countries, although STA eligibility should be retained for Argentina, Austria, Canada, Sweden and Switzerland for 6A615.d items, since non-sighting items are less sensitive and not subject to FC/CC/UN restrictions. We note that these additional controls would make more sense, and adjustments to the controls on 6A615.d would be less appropriate, if 6A615.d were to apply only to "military" grade night vision Weapon Imaging Systems, and not to civilian items, which would drop to 6A992 control.

Armasight Inc.
815 Dubuque Avenue,
South San Francisco,
CA 94080, USA
Phone: (888)959-2259
Fax: (888)959-2260
Intl Phone/Fax: (650)492-7755
www.armasight.com
info@armasight.com

- **Creation of 0E987 Imposes Controls on Technology that Was Not Previously Controlled, Targets Technology that Is Widely Available Worldwide, and May Not Actually Control Any Technology at All, Because There is Very Little Technology Related to the Development or Production of Night Vision 0A987 Items that Is Not Identical to that Used to Develop or Produce non-Night Vision Weapons Sights.**
    - Technology for the development and production of 0A987 items is currently EAR99 controlled. The creation of a control for information related to the "production" or "development" of 0A987 sighting devices that contain infrared imagers imposes controls on technology that is not currently controlled, and which, to the extent it actually exists, is widely available on a worldwide basis.

      However, it is not likely that 0E987 actually controls much technology at all, as defined in EAR Part 772.1 and the General Technology Note. The General Technology Note and the definition of "required" limit controls on technology to that which is "peculiarly responsible" for conferring the specific characteristics or performance parameters that qualify an item for the ECCN in question. 0E987 would control technology that is "peculiarly responsible" for making a sight night vision capable vs. a day sight. Under the current and proposed re-definition of "peculiarly responsible", any technology that is the same for the development of an 0A987 day sight and a night vision 0A987 sight would not be "peculiarly responsible", and thus would not be controlled under 0E987.

      The technology to develop or produce the night vision element would already be controlled by 6E001 or 6E002, or by other category 6 technology ECCNs, so the difference between production or development of an 0A987 night vision versus an 0A987 day sight, generally speaking, would be what type of imaging device is dropped into the body of the sight. Adjustments to accommodate an infrared imager would likely be solely for "fit" purposes, or perhaps involve the substitution of infrared capable optics, which would likely be of standard sizes so they could "drop in" to an existing day sight design. Thus the scope of controls would likely be limited to fit modification information to allow integration of a night vision element into the body of a sight.

      To the extent controlled, such information would be widely available on a worldwide basis, as the minor changes to a design to permit interface with either a night vision or day optical element are well-known and available on a worldwide basis, as night vision weapons sights are produced in numerous countries. Thus, it would not appear that the creation of this ECCN would serve much purpose, other than to create uncertainty regarding whether export licenses may be required to assist with the design of weapons sights that is currently treated as EAR99.

Armasight Inc.
815 Dubuque Avenue,
South San Francisco,
CA 94080, USA
Phone: (888)959-2259
Fax: (888)959-2260
Intl Phone/Fax: (650)492-7755
www.armasight.com
info@armasight.com

- Controls on Bodies and Kits Should Be Clarified, as Government Classifications Have Been Inconsistent
    - Armasight also believes that these changes should address more clearly the controls applicable to semi-knock-down kits for weapon sights and other night vision devices. U.S. government rulings have treated such parts and components – many of which are foreign manufactured plastic components – are ITAR controlled, and in some cases have treated them as EAR99. Introduction of a "specially designed" concept is helpful, but such items should perhaps be more clearly called out in a 6A615.y category – although that could even be an over control, since many such items are manufactured as COTS equipment in China. Overall, more rational treatment of such non-critical components would be welcome.

- **Foreign Availability of Identical and Similar Products**
    - It is important to note that the technology used to manufacture night vision and thermal imaging systems is available worldwide and there are many countries currently producing systems that are of equivalent to the U.S.-manufactured goods. In the competitive international market, we are regularly informed of foreign manufacturers that have the ability to provide higher grade systems to the end user, but with far less restrictions and that can be delivered within a shorter timeframe. It is becoming increasingly difficult for U.S. companies to compete in the international market as the buyers are quickly discovering that they can purchase articles with the same performance, and have it much sooner and without having to go through the additional processes required for U.S license applications.

    - While many of the restrictions in place are needed and justified, there are other restrictions on U.S goods that, to the competitive market, seem too stringent and have begun to push U.S companies out of the market in favor of the foreign manufacturers. This is making us non-competitive in many ways. We feel that an overall assessment of international availability and reasonable adjustments would be justified. It has become clear that foreign-manufactured items are meeting or exceeding the specifications of U.S. made goods, and U.S. companies will quickly be eliminated from competition in the international markets if we cannot offer high grade devices at fair prices without a substantial amount of wait time, paperwork and "red tape". If the regulations become too tight and the process becomes too complicated, the affected customers will buy from manufacturers outside of the United States which will provide those Foreign suppliers with the capital to improve their products through investment in R&D, improve their manufacturing capability along with other industrial infrastructure advancements that have multiple secondary and tertiary effects in the

Armasight Inc.
815 Dubuque Avenue,
South San Francisco,
CA 94080, USA
Phone: (888)959-2259
Fax: (888)959-2260
Intl Phone/Fax: (650)492-7755
www.armasight.com
info@armasight.com

competitive manufacturing world. In addition, when a foreign customer is not buying from the USA, then we lose ground/naval/air order of battle intelligence which helps the US Armed Forces develop both tactical and strategic engagement planning. It does not appear that the proposed changes take these factors into account, given that they expand ITAR controls and remove License Exception eligibility from the EAR, further constraining an already stressed U.S. industry.

- **Overall Assessment of the Proposed Rules**
  - While there are some improvements made in the proposed rules, we feel there is still much to address to ensure that the rules are clear, concise and fair across the board. The language of the rules is still a bit confusing and allows for varied interpretations. This issue is one that has plagued many of companies in our industry, as some receive more favorable classifications than others for identical products, depending on the interpretation of the officials handling the case. Simplifying the regulations and creating more clarity will eliminate the inconsistent interpretations of the regulations and lead to a more equal and fair competitive market. In reading the proposed regulations, it is clear that a novice reader would have extreme difficulty interpreting these regulations and properly classifying products without having to file for CJs or CCATS.

  - It would make much more sense to focus ITAR controls on the limited number of IITs, IRFPAs, and thermal imaging cores that are truly at the top of the performance threshold, and which have primarily military applications. For example, it would be much clearer to simply control Gen II IITs as dual-use items, given that the U.S. military has left such technology behind and there is no U.S. manufacturer of such goods, reserving ITAR control for Gen III+ items. ITAR control should also be reserved for only high-performance, large format Vanadium Oxide/Silicon Microbolometer IRFPAs, as well as high-performance, large format compound semiconductor IRFPAs, recognizing that the parameters may differ based on detector composition. The attempt to differentiate controls based on whether or not the IRFPA is packaged is extremely difficult to comply with, and it would make more sense to impose tight controls on the manufacturing technology for IRFPAs, instead of trying to impose different license requirements on items at different stages of manufacture. The packaging differentiator also doesn't make much sense in light of the trend toward wafer-level packaging.

Armasight Inc.
815 Dubuque Avenue,
South San Francisco,
CA 94080, USA
Phone: (888)959-2259
Fax: (888)959-2260
Intl Phone/Fax: (650)492-7755
www.armasight.com
info@armasight.com

If you have any questions regarding the comments herein, or require any additional information, please do not hesitate to contact me.

Sincerely,

Amy Currie
Export Compliance and International Contracts Manager

Armasight. Inc.
Tel: 480-907-6950
Fax: 480-393-4882
Email: acurrie@armasight.com

Armasight Inc. Cage Code 6SRX2
ARMASIGHT
AMAT VICTORIA CURAM
Federal EIN: 45-2078505

July 6, 2015

Regulatory Policy Division
Bureau of Industry and Security
U.S. Department of Commerce
14th Street and Pennsylvania Avenue NW.
Room 2099B
Washington, DC 20230

By email to publiccomments@bis.doc.gov

RE: RIN 0694–AF75

Dear Sirs/Madams,

I am writing on behalf of the Association of University Export Control Officers (AUECO), an association of over 115 senior export practitioners with export compliance responsibilities at more than 90 accredited institutions of higher education in the United States. As expressed in its founding charter, AUECO is committed to monitoring changes in the administration of export laws and regulations that could affect transactions and collaborations in academia.

AUECO is providing the following comments in response to the Bureau of Industry and Security (BIS) RIN 0694–AF75, *Revisions to the Export Administration Regulations (EAR): Control of Fire Control, Range Finder, Optical, and Guidance and Control Equipment the President Determines No Longer Warrant Control Under the United States Munitions List (USML)*.

AUECO is specifically interested in contributing to the export reform effort in order to ensure that the resulting regulations do not have an adverse impact on academic pursuits, and offer the following comments. We fully appreciate the value of night vision technology in defense applications, and the importance of maintaining the U.S. advantage in this area. As universities conducting academic research, we are also keenly aware of the value of infrared sensors in non-military research such as astronomy and space science, telecommunication, photonics, computer processor-memory interconnects, materials engineering, thermal management, energy storage, energy conversion, photovoltaic devices, groundwater management, computational ophthalmology, and molecular medical diagnostic tools.

1. Too many infrared sensors required for scientific research would be subject to ITAR control.

RIN 0694–AF75 and the complementary RIN 1400-AD32 would mean that devices required for scientific research would be more subject to ITAR control, and that some EAR-controlled devices already in use would become ITAR-controlled. This makes it more difficult to use them in domestic research or to export to scientific installations outside the U.S., such as astronomical observatories. For devices already in use, it will also result in uncertainty and confusion. U.S. research in the scientific areas listed above will be disadvantaged compared to researchers in other countries with less restrictive access to these scientific tools.

This is particularly troubling in light of the October 2012 *Critical Technology Assessment: Night Vision Focal Plane Arrays, Sensors, and Cameras*[1], which had concluded that:

> *Military-use-only night vision components and equipment have different physical and technical characteristics than dual-use night vision components and equipment (e.g., weapons mounting, stability software, special packaging), which could be used as a discriminator in controlling items on the USML and CCL*
>
> *Uncooled infrared FPA size is not an indication of military application*
>
> *IIT Generation is not an indication of military application*

Note: the ITAR Cat XII "catches" "with minor exceptions, all bare IRFPAs", and "releases" the sensor assemblies not controlled in (c)(3)-(6), which they claim "are set at a level that the Department has concluded excludes most commercial products." But then they specifically refer to IIT generation and FPA size.

> *There is widespread availability of night vision components and equipment among Wassenaar Arrangement regime members.*
>
> *There is evidence that certain items across all types of night vision components and equipment are available from outside of regime members. These countries include Belarus, China, India, Israel, Singapore, and Taiwan.*
> *There is clear evidence that foreign availability exists outside of regime members at all size ranges for uncooled FPAs, uncooled cameras, and IIT imagers.*

Since State Department jurisdiction takes precedence, we've made more specific comments in our response to RIN 1400-AD32 regarding USML Category XII, but are including the concern in these RIN 0694-AF75 comments because they will need to change in complementary manner.

2. 6E615 "Technology" control of "operation" significantly and unnecessarily constrains research use of infrared cameras.

We understand that transfer of technology required for development, production, installation, maintenance, repair, overhaul or refurnishing of controlled infrared cameras could provide information enabling similar technology to be developed outside the U.S.

However, the transfer or technology required to merely operate an infrared camera doesn't help anyone to develop the capability to detect and image infrared light. The price of restricting this operation technology includes using substandard instruments instead, making research slower and more expensive through burdensome control processes, and excluding researchers who may be the best qualified to conduct the research.

[1] https://www.bis.doc.gov/index.php/forms-documents/doc_view/630-night-vision-assessment

AUECO recommends the following revision to 6E615:

6E615 ''Technology'' ''required'' for the ''development,'' ''production,'' installation, maintenance, repair, overhaul or refurbishing of commodities controlled by 6A615, equipment controlled by 6B615, or ''software'' controlled by 6D615 (see List of Items Controlled).

---

3. 6E001 and 6E002 "Technology" may unnecessarily restrict the use of infrared sensors controlled by 6A002, 6A003, or 6A993.

Related Controls (3) for 6E002 and 6E003 states that technology for encapsulating an IRFPA, whether ITAR or EAR, resulting in a "permanently encapsulated sensor assembly" is EAR controlled, "provided such information does not include design methodology, engineering analysis, or manufacturing know-how." The scope of this proviso is ambiguous. Further, for the same reasons as (3) above, we believe that operation instructions don't require this control.

We recommend that the last sentence of Related Controls (3) for 6E002 and 6E003 should be revised to state:

"This technology includes the testing for a focal plane array in a ''permanent encapsulated sensor assembly'' subject to the EAR, mechanical dimensions and physical characteristics of the sensor assembly, provided such information does not include design methodology, engineering analysis, or manufacturing know-how related to the IRFPA."

AUECO appreciates the opportunity to provide BIS with the above comments on RIN 0694-AF75.

Sincerely,

Mary Beran

Chair
Association of University Export Control Officers
Email: auecogroup@gmail.com
Website: http://aueco.org

Autoliv

July 2, 2015

Directorate of Defense Trade Controls
U.S. Department of State
c/o DDTCPublicComments@state.gov

Subject: ITAR Amendment – Category XII

Bureau of Industry and Security
U.S. Department of Commerce
c/o publiccomments@bis.doc.gov

Subject: RIN 0694-AF75

Ladies and Gentlemen:
On behalf of Autoliv ASP, Inc., the U.S. subsidiary of Autoliv, Inc. ("Autoliv"), I am sending this letter as our public comments to your proposed revisions to the Export Administration Regulations ("EAR") and International Traffic in Arms Regulations ("ITAR"), requested in your May 5, 2015 Federal Register notices.

I. Autoliv's Safety Products for the Civil Automotive Industry

Autoliv is the worldwide leader in civil automotive safety systems, and develops and manufactures civil automotive safety systems for all major civil automotive manufacturers in the world, including airbags, seatbelt devices, night vision, and other passive and active safety systems. Together with its joint ventures, Autoliv has more than 80 facilities with more than 60,000 employees in 28 countries. In addition, the Company has ten technical centers in nine countries around the world, with 21 test tracks, more than any other automotive safety supplier. Sales in 2014 amounted to US $9.2 billion. Autoliv estimates that its civil automotive safety products save over 30,000 lives every year, and prevent 10 times as many severe injuries. Autoliv's electronics facility in Goleta, California, designs, develops, and produces civil automotive night vision systems that likewise save lives across the globe. The use of infrared cameras in the civil automotive market has grown throughout the past 10 years. From the first systems which provided an image to drivers allowing them to see 3 to 5 times farther than their headlamps, to the current systems providing the driver with warning of pedestrians and animals in the path of vehicle, Autoliv's night vision cameras have made civil automobiles safer.

There are over 100,000 pedestrian fatalities and more than 1.5 million car-deer accidents globally each year. Nearly 70 percent of these fatalities happen at night. Our night vision camera systems are instrumental in reducing accidents and saving lives of pedestrians, vehicle occupants and animals.

The use of our infrared cameras in civilian passenger land vehicles continues to grow as the civil automotive market continues its path to providing safer vehicles. The U.S. Tech Choice Study published by JD Power in April 2015 identified night vision as the second most preferred civil automotive technology (behind only "blind spot detection and prevention"). MarketsandMarkets recently reported that by 2019 the automotive night vision system market will reach $2.5 billion and the automotive driver monitoring system market will reach $4.9 billion. Infrared cameras will also assist in achieving autonomous driving vehicles in the future.

Autoliv Electronics Night Vision
420 South Fairview Avenue
Goleta, CA 93117 USA

Phone +1 805 571 1777
Fax +1 805 571 1779
www.autoliv.com

II. General Comments Regarding Proposed Rules

Because of this increased usage of infrared sensors and cameras to improve safety and save lives in the civil automotive market, we respectfully request that both the Department of State and the Department of Commerce consider relaxing the current export requirements for civil automotive infrared components, technology, software, and systems. The proposed rules, in contrast, appear to impose additional constraints and complexity that we believe are not necessary, particularly in light of the current, effective EAR and ITAR controls on related hardware, software and technology.

Our civil automotive OEM customers have successfully committed themselves to compliance with the existing export control regulations, and they also have found the proposed rules to be both confusing and more restrictive. Some already have suggested looking outside the United States to meet their future infrared sensor and camera needs for civilian passenger land vehicles in order to avoid the confusing and restrictive language being proposed. There are currently sensor and camera manufacturers delivering these civil products without such restrictions in France (please see: www.ulis-ir.com), China (please see: www.dali-tech.us , http://www.militram.com/category/articles/cameras-articles/beam-profilers-cameras/thermal/uncooled/ , http://www.suncti.com/en/index.aspx) and Japan (please see: http://www.solteccorp.com/).

III. Specific Comments Regarding Proposed Rules

Autoliv makes infrared cameras specially designed for installation in civilian passenger land vehicles, and those cameras are classified in the Commerce Control List ("CCL") under ECCN 6A993.a. because our cameras meet the criteria of Note 3 to ECCN 6A003.b.4. and related Wassenaar Arrangement provisions, including an anti-tamper mechanism. Our cameras include infrared focal plane arrays (IRFPA's) that, if exported separately, are controlled under the current U.S. Munitions List ("USML") Category XII(c), but are subject to EAR controls when exported as part of our civil automotive cameras, in accordance with the current USML Category XII(c). These ITAR and EAR provisions have worked well to ensure export compliance, in addition to providing a "bright line" between the USML and the CCL for the control of our products.

In contrast to the current regulations, the proposed USML Category XII(c) items related to Autoliv's civil automotive products, and the related proposed Note 2 to paragraph (c) and proposed Note to paragraph (e) appear to us to be confusing. Under the proposed USML Category XII(c) provisions, our civil automotive cameras would include IRFPA's that are incorporated into permanent encapsulated sensor assemblies (including a "vacuum package") that are incorporated into camera cores that are incorporated into our ECCN 6A993.a. cameras, which include also infrared lenses and processing electronics.

Under the proposed rules, the IRFPA's would be controlled under Category XII(c)(2), but once integrated into a permanent encapsulated sensor assembly, they would be controlled under Category XII(c)(4), having greater than 256 detector elements. The camera core into which the Category XII(c)(4) IRFPA is incorporated would be classified under Category XII(c)(12)(ix). Once our microbolometer IRFPA has greater than 328,000 detector elements and is in a permanent encapsulated sensor assembly, it would be controlled under Category XII(c)(5). The camera core into which the Category XII(c)(5) IRFPA is incorporated would be classified under Category XII(c)(12)(iii). Once the vacuum packages under Category XII(c)(4) and Category XII(c)(5) are incorporated into a camera core, it appears that they also would be classified under Category XII(e)(6). The infrared lenses would be classified under Category XII(e)(9), and the processing electronics would be classified under Category XII(e)(10). We found these multiple alternative classifications to be confusing.

Autoliv Electronics Night Vision
420 South Fairview Avenue
Goleta, CA 93117 USA

Phone +1 805 571 1777
Fax +1 805 571 1779
www.autoliv.com

In addition, in order for our civil automotive camera, which includes a camera core, permanent encapsulated sensor assembly, IRFPA, infrared lens, and processing electronics, to meet the requirements for EAR control under the proposed Category XII Note 2 to paragraph (c) and Note to paragraph (e), the "article" "cannot be removed without destruction or damage to the article or render the item inoperable." It is unclear whether the "article" or the "item" is the camera, the camera core, the permanent encapsulated sensor assembly, the IRFPA, the infrared lens, or the processing electronics. It also is unclear how the two Notes would or would not permit the export of our currently ECCN 6A993.a cameras for installation in civilian passenger land vehicles. All of these "articles" or "items," other than the IRFPA's, can be removed without damage or destruction. If our civil automotive camera is disassembled, all of these "articles" or "items" would become inoperable in the sense that they only work together as a civil automotive camera, but each component remains operable in the sense that it could be used subsequently in an assembled system. In general, all components making up our ECCN 6A993.a. cameras that meet the requirements for civilian passenger land vehicles under Note 3 to ECCN 6A003.b.4., including the anti-tamper mechanism, should remain under EAR control, rather than ITAR control.

Regarding the wording on shock requirements at proposed Category XII(c)(12)(ii), the civil automotive market has high quality requirements to prevent such defects that may cause harm to the driver, occupants or pedestrians. The automotive shock requirements vary by OEM but are approximately 100g, 11ms, half sine, and we do not measure beyond these requirements. It is unclear whether our products will meet the shock level stated in the proposed rules, and we suggest the wording be clarified to allow ECCN 6A993.a. cameras to remain under EAR control as long as they meet the related civil automotive requirements currently in place for civilian passenger land vehicles.

Regarding the proposed removal of License Exception STA eligibility for technology classified under ECCN's 6E001, 6E002 and 6E994, Autoliv has successfully ensured related export compliance through the proper use of License Exception STA with our eligible customers, our affiliate companies in Sweden, Germany, and Canada, and our Canadian national employees. Use of that license exception should remain available for our eligible employees and affiliate companies. License Exception STA also should remain available for our eligible customers in order to permit the parties to verify the quality of the products' design and manufacturing for end use in civilian passenger land vehicles. Our customers must have the ability to tour our facility and verify quality requirements for our cameras, optics, electronics, and integration of the IRFPA, all of which is limited to ECCN 6E001 and 6E002 technology for cameras (we do not share with our customers sensor technology controlled under ECCN 6E001 or 6E002, or ROIC technology controlled under ECCN 6E990). That need has been met – and can continue to be met - in a successful and compliant manner through the use of License Exception STA.

In addition, Autoliv designs and develops software for the manufacture, testing, and operation of our ECCN 6A993.a. cameras. We likewise have used License Exception STA in a successful and compliant manner to meet related needs with our affiliate companies in Sweden, Germany, and Canada, and our Canadian national employees. License Exception STA should remain available for this purpose as well.

Autoliv Electronics Night Vision
420 South Fairview Avenue
Goleta, CA 93117 USA

Phone +1 805 571 1777
Fax +1 805 571 1779
www.autoliv.com

Autoliv

IV. Conclusion

The current Category XII(c) and related EAR provisions have worked in an effective manner to ensure export compliance with our customers, employees, and affiliate companies. Autoliv's products include strong and effective anti-tamper features to disable our cameras when removed from the civilian passenger land vehicles for which they have been designed and are used. We hope that DDTC and BIS will either reduce the current controls for our civil automotive cameras, or at a minimum maintain the current language in the ITAR and EAR. Thank you for your attention to these comments and suggestions. Please contact Richard Seoane at (805) 562-5930 or richard.seoane@autoliv.com if you have any questions concerning this letter.

Sincerely,

Richard Seoane
General Manager
Autoliv Electronics Night Vision

Autoliv Electronics Night Vision
420 South Fairview Avenue
Goleta, CA 93117 USA

Phone +1 805 571 1777
Fax +1 805 571 1779
www.autoliv.com

From: Eric Bergles <EBergles@bayspec.com>
Sent: Monday, June 22, 2015 4:02 PM
To: PublicComments
Subject: re: RIN0694-AF75 (BaySpec, Inc. Comments)
Attachments: BaySpec-Datasheet - OCPM-Standard.pdf; BaySpec-Datasheet - OCTS-NIR Series.pdf; BaySpec-Datasheet - FBGA Standard - R(m).pdf

Regulatory Policy Division
Bureau of Industry and Security
U.S. Department of Commerce
14th Street and Pennsylvania Ave., N.W.
Room 2099B
Washington, D.C. 20230

Subject: Revisions to the Export Administration Regulations (EAR): Control of Fire Control, Range Finder, Optical, and Guidance and Control Equipment "RIN0694-AF75"

June 22, 2015

To Whom It May Concern:

BaySpec, Inc., founded in 1999 with 100% manufacturing in the USA (San Jose, California), is a vertically integrated spectral sensing company. The company designs, manufactures and markets advanced spectral instruments, including UV-VIS-NIR-SWIR spectrometers, benchtop and portable NIR/SWIR and Raman analyzers, confocal Raman microscopes, hyperspectral imagers, mass spectrometers, and OEM spectral engines and components, for the R&D, biomedical, pharmaceuticals, chemical, food, semiconductor, health monitoring, human & animal medical devices, fiber sensing, and the optical telecommunications industries.

Direct comparison of non-military products with USML entries are listed here:

1. We observed that the paragraph 12(c)(2) will classify unsealed linear array devices as ITAR, making the devices we receive from InGaAs vendors which are assembled into higher level fully enclosed channel monitors and fiber grating sensors interrogators, controlled items (see attached datasheets). To date, over the last 12 years, BaySpec has shipped over 40,000 such devices to the commercial telecom and fiber sensing markets. These devices provide a critical piece of the world's internet background and are used for vital structural health monitoring purposes.

2. We also note that arrays with over 640 elements linear array will also become ITAR. BaySpec received arrays with 640 or more elements from InGaAs vendors, which are assembled into higher level spectrometers for biomedical optical coherence tomography (see attached OCT-NIR datasheet) for ophthalmology.

3. We are reviewing the HSI product definitions too about the multi-spectral controls: "Multispectral IRFPAs in Permanent Encapsulated Sensor Assembly ¬ Wavelength exceeding 1,500nm but not exceeding 30,000nm". BaySpec is not yet manufacturing hyperspectral imagers over 1500 nm, but have received strong customer interest, as longer wavelengths would naturally provide rich chemical information. If we manufacture

in the future, these hyperspectral imagers would be targeted for use by our current customers in precision agriculture, pharmaceutical, and geological/mining survey markets.

For all products above, the target markets were for commercial applications and not specifically designed or in funded by or for military/defense/space purposes.

BaySpec also offers these same products to the military/defense market as commercial off-the-shelf (COTS) devices. Some of our customers include *Harris Corporation*, *NASA, General Dynamics AIS*, *Raytheon*, *Northrop Grumman* and the *U.S. Department of Defense*. If the new proposed changes come into effect, the cost for products will go up substantially to our domestic contractors and ultimately hurt the already strained U.S. budget and taxpayer burden.

BaySpec has international competitors that also source and assemble arrays into final products which are commercially available on the open market, so any additional ITAR classification will present U.S. based BaySpec with an undue burden of compliance adding extra costs and making U.S. products less competitive. A few examples of our competitors, *Ibsen Photonics* (Denmark, www.ibsenphotonics.com) manufacturers FBG interrogators using the same detectors, *Specim* (Finland, www.specim.fi) makes high pixel count hyperspectral imagers, *Horiba Scientific* (Japan/France, www.horiba.com) makes custom spectrometers using linear and two-dimensional arrays. BaySpec believes that the proposed wording will reduce incentives to buy made in USA products while greatly helping our foreign competitors.

The proposed rules, as such, would impact over 90% of BaySpec's product revenue. As a small business, BaySpec does not have the resources to fundamentally restructure its business in this highly competitive marketplace.

In conclusion, BaySpec suggests the following:

- Proposal should be fundamentally rewritten
- Specially Designed should be fully applied to this Category
  - As opposed to performance parameters
- USML should align with the Wassenaar Munitions list

If you require any further information, please contact me on behalf of BaySpec at (408)512-5960 or via email at ebergles@bayspec.com.

Best regards,

Eric Bergles

VP Sales & Marketing
BaySpec, Inc.
1101 McKay Drive
San Jose, California 95131 USA

Office: +1(408)512-5928
Direct: +1(408)512-5960
Web: www.bayspec.com

BaySpec
Pervasive Spectroscopy

Optical Channel Performance Monitor

IntelliGuard® OCPM Series

BaySpec's OCPM Series Optical Channel Performance Monitor is an embedded, integrated spectrum analyzer delivering precise measurement and powerful processing capabilities for dense wavelength division multiplexing (DWDM) applications.

The device covers C and/or L band wavelength ranges and provides simultaneous measurements of up to 160 channels spaced 50 GHz apart. High reliability (GR-63/1209/1221 qualified) is achieved through a rugged mechanical design with no moving parts. Periodic calibration is not required. Input/Output (I/O) is provided through a dual port RAM interface accessed through ADD/DAT bus direct connection or serial (RS232 or USB) communications.

The *IntelliGuard®* OCPM Series employs a highly efficient Volume Phase Grating (VPG®) as the spectral dispersion element and an ultra-sensitive InGaAs array detector as the detection element, thereby providing high-speed parallel processing and continuous spectrum measurements. As an input, the device uses a tapped signal from the main data transmission link through a single mode fiber, then collimating it with a micro lens. The signal is spectrally dispersed with the VPG®, and the diffracted field is focused onto an InGaAs array detector. The control electronics read out the processed digital signal to extract required information. Both the raw data and the processed data are available to the host through the chosen interface.

Key Features:

- Real-time <1 ms response time for raw data
- Remote gain equalization of DWDM networks based on optical power or OSNR
- High dynamic range - 50 dB
- High reliability - no moving parts and GR-63/1209/1221 qualified
- Athermal design for ultra-low power consumption
- Compact for new system space constrained environments 68 x 96 x 15.8 mm^3; legacy designs available upon request
- Supports different modulation schemes for 10/40/100 GHz transmission

Applications:

- EDFA gain balancing
- Optical add/drop monitoring
- Physical layer monitoring for provisioning and commissioning optical networks
- Real time fault detection and isolation in DWDM systems
- Channel power, wavelength and OSNR measurement
- OEM module for field test equipment

Compliance

- Telcordia GR-63/1209/ GR-1221 qualified

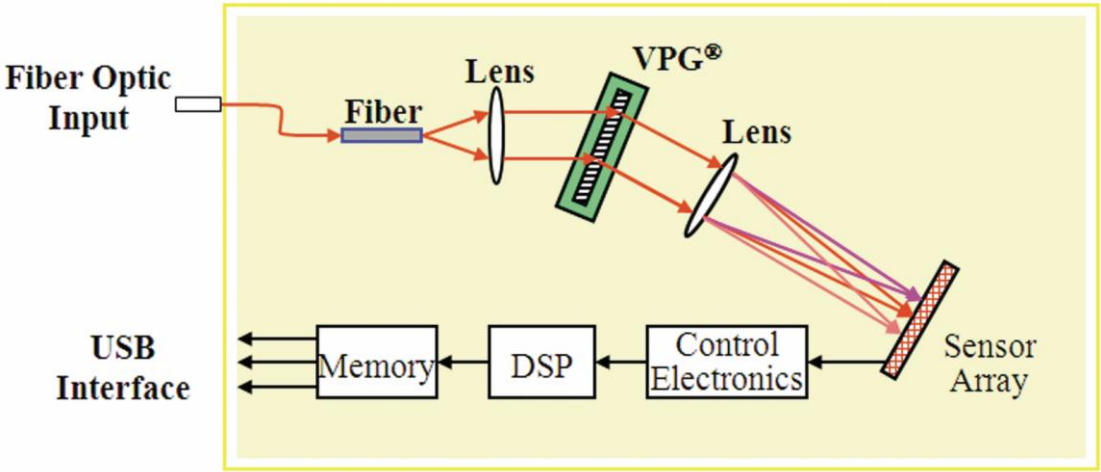

© 2013 BaySpec, Inc. All rights reserved.

BaySpec, Inc.
1101 McKay Drive
San Jose, CA 95131
USA

Tel: +1 (408) 512-5928
Fax: +1 (408) 512-5929
Web: www.bayspec.com
Email: sales@bayspec.com

Optical Channel Performance Monitor

IntelliGuard® OCPM Series

Parameter	Data	Unit
Wavelength Range	C or L-band	
Number of Channels	40, 80, 160 or specify	#
Channel Spacing	100, 50 or specify	GHz
Absolute Wavelength Accuracy	± 50	pm
Relative Wavelength Accuracy	30	pm
Channel Input Power Range	-65 to –15 or specify	dBm
Channel Power Accuracy	± 0.5	dB
Power Resolution	0.1	dB
PDL	0.3	dB
Response Time	<50 processed data (<1 raw data only)	ms
OSNR	25	dB
OSNR Accuracy	± 2	dB
Size	68 x 96 x 15.8*	mm^3
Interface	USB, RS-232 or Dual-port RAM	
Weight	<260	g
Power consumption	<2 W max*	W

*Subject to Change, Depending on specifications

Sense 2020 Software

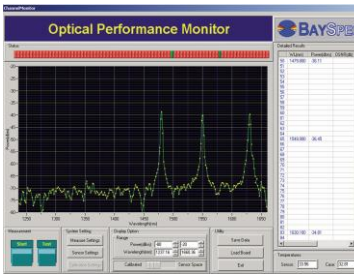

BaySpec's *Sense 2020* software included, a Windows-based package with flexible data acquisition, processing and output functionality

BaySpec SDK, a software development kit for new applications development and integration into to your host software systems.

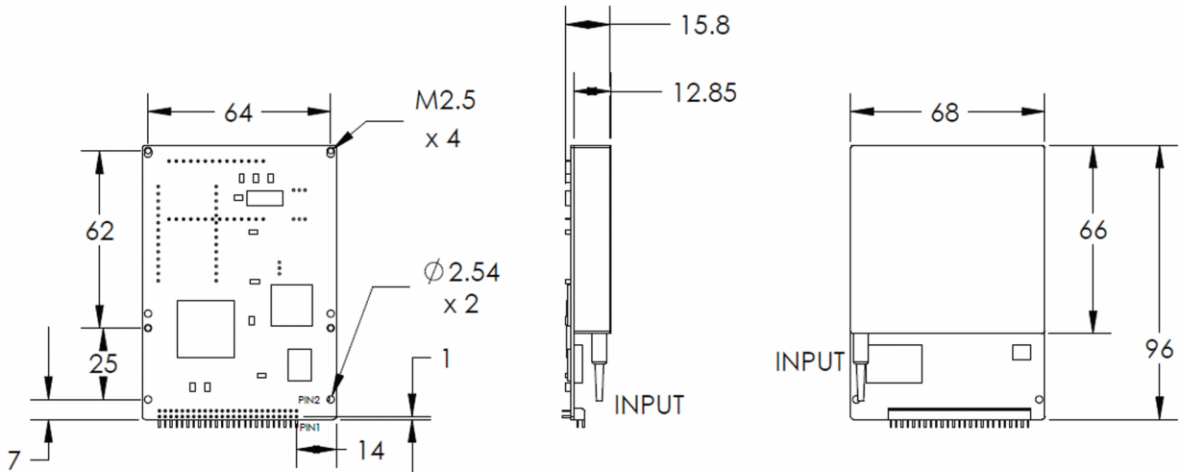

Part Number Selection:

OCPM- □□□ - □□□ - □□□□ - □□

Code	Channel Spacing
100	100 GHz
050	50 GHz
xxx	TBD

Code	Channel Number
040	40
080	80
160	160
xxx	TBD

Code	Starting Wavelength
Please specify the shortest wavelength i.e. :	
2955	1529.55 nm

Code	Connector
NC	None
FA	FC/APC
FP	FC/PC
SA	SA/APC
SP	SA/PC
LA	LC/APC
LP	LC/PC
XY	TBD

Note: OSNR reporting optional
Standard fiber length is 1.0m

BaySpec, Inc.
1101 McKay Drive
San Jose, CA 95131
USA

Tel: +1 (408) 512-5928
Fax: +1 (408) 512-5929
Web: www.bayspec.com
Email: sales@bayspec.com

© 2013 BaySpec, Inc. All rights reserved.

Spectral Domain OCTS Engine

DeepView® OCT Long-wavelength Series

OCT Lone-wavelength Series spectral engine shown with example camera

BaySpec's all new *DeepView*® Fourier or Spectral-Domain OCT Spectral Engine is an InGaAs line scan camera with an integrated *VPG*®-based Spectrograph simultaneously covering multiple wavelengths for precise and rapid optical coherence tomography measurements.

The *DeepView*® Spectral Engine provides convenience for researchers and OEM users assembling fourier or spectral-domain optical coherence tomography (SD-OCT), white light interferometry (WLI) or VIS-NIR spectroscopy systems. This flat-field spectral analyzer design is based on highly efficient transmission *Volume Phase Grating* (VPG®) and mounts on an ultra-fast digital line scan camera. The spectral engine accepts single-mode fiber optic inputs and is customizable via grating inserts to match the spectral bandwidth and center wavelength of the users' light source.

The OCTS NIR Series spectral engine employs a highly efficient *Volume Phase Grating* (VPG®) as the spectral dispersion element and an ultra-sensitive InGaAs array detector as the detection element, thereby providing high-speed parallel processing and continuous spectrum measurements. The signal is spectrally dispersed with the *VPG*®, and the diffracted field is focused onto an InGaAs array detector. The control electronics read out the processed digital signal to extract required information. Both the raw data and the processed data are available to the host.

Applications:

- High-speed spectral OCT for cancer detection in the biologically interested wave bands of 0.8-2.2 µm range
- High-resolution NIR spectral OCT in retinal diagnostics and measurements in ophthalmology
- Spectral OCT guidance on implant and surgery
- High speed and fast turn-around Spectral OCT assessment of surgical outcome
- Catheter/Endoscopic SD OCT image guided diagnostics, image-guided surgery, and image-guided therapy
- In vivo and in vitro general medical diagnostics and imaging
- In vivo and in vitro operation room and surgical procedure Quality Assurance
- Non-invasive skin cancer and skin disease diagnostics and detection
- Industrial applications such as non-destructive testing

Key Features:

- Rugged and reliable spectrometer featuring no moving parts
- Highly-efficient, high-resolution Volume-Phase Grating®
- Flexible options for center wavelength and spectral bandwidth, selectable at time of order; contact factory for custom solutions and packaging with NIR camera.
- Grating and optical bench customizable for your light source and application
- Single-mode fiber coupled inputs; other input fiber options available

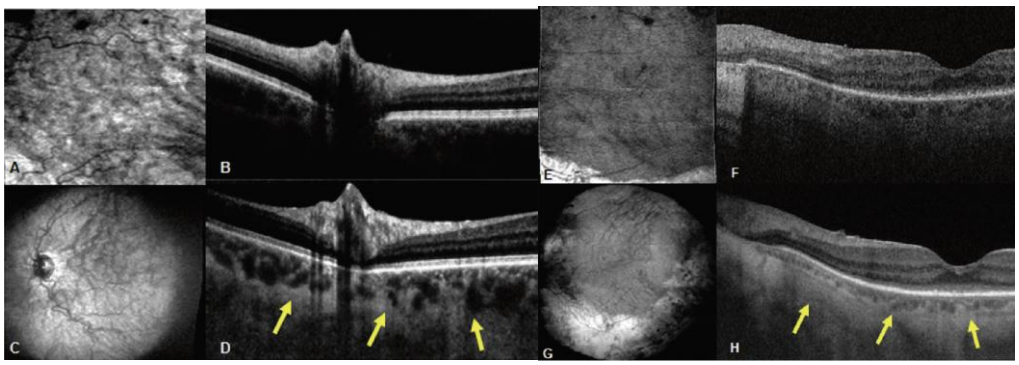

3D Optical Coherence Tomography (OCT) at 800 and 1060nm of (A)–(D); a normal retina and (E)–(H) a patient with retinitis pigmentosa. (A, E) En-face zoomed-in fundus image of the choroid using 1060nm 3D OCT. Arrows indicate enhanced choroidal visualization. (Courtesy Cardiff University)

BaySpec, Inc.
1101 McKay Drive
San Jose, CA 95131
USA

Tel: +1 (408) 512-5928
Fax: +1 (408) 512-5929
Web: www.bayspec.com
Email: sales@bayspec.com

© 2013 BaySpec, Inc. All rights reserved.

Spectral Domain OCTS Engine

DeepView® OCT Long-wavelength Series

Parameter	Specification
Optical	
Image plane size [1]	26 mm wide
Optical spot size (single mode fiber)	25 µm diameter
Aperture (f#)	f/4
Focal length (nominal)	100 mm
Mechanical	
Length x Width x Height:	260 x 240 x 116 mm^3 Height includes fiber mount and camera mounting plate size subject to change based on specifications
Weight:	< 800 g (spectrograph only) < 450 g (camera)
Fiber optic interface	Keyed FC/APC (inquire about PM or alternate types)
Camera compatibility	SU1024LDH2-1.7RT-0500/LC, inquire on other types
Camera mount	Optional

[1]with single-mode fiber input (core diameter of 9 µm)

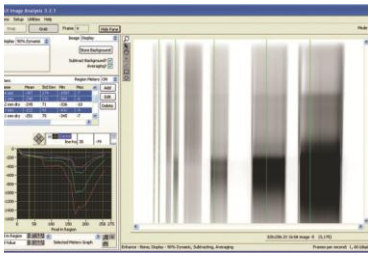

Image Analysis Software with each spectral engine purchase

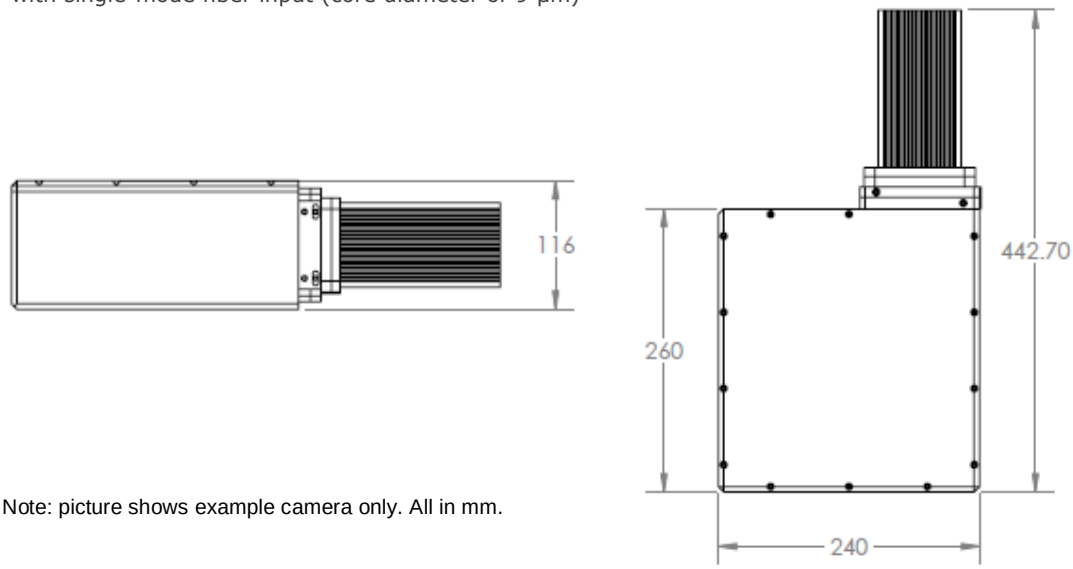

Note: picture shows example camera only. All in mm.

Consider using with:

- Fast Digital Line Scan Cameras, we can customize to any available model
- Mini-Wide Light Sources
- ASE Light Sources
- Fiber-optic Bundles & Accessories

Ordering Information:

(grating options – ordering suffix[2], other options by request)

	-1280-1310-1340
Center wavelength (nm)	1310
Bandwidth (nm) [3]	60 or custom
Wavelength range (nm)	1280 (0px) – 1340 (~1024px)
Wavelength dispersion (nm_{avg}/pixel) [4]	0.05
Wavelength dispersion (nm_{avg}/mm)	1.95
Stray light(% of peak 100 pixels away[5]	0.1%

[2]Spectrometer model number is OCTS-XXX-YYY-ZZZ; Replace YYY with nominal center wavelength; replace XXX with starting wavelength; ZZZ for ending wavelength
[3]Over 20 mm image plane
[4]With 10 µm pixel pitch
[5]Test laser wavelengths used: 800 nm, as appropriate for grating option selected

Specifications are subject to change without notice

BaySpec, Inc.
1101 McKay Drive
San Jose, CA 95131
USA

Tel: +1 (408) 512-5928
Fax: +1 (408) 512-5929
Web: www.bayspec.com
Email: sales@bayspec.com

© 2013 BaySpec, Inc. All rights reserved.

High Speed FBGA Analyzer

WaveCapture® FBGA Series

BaySpec's *WaveCapture*® FBGA Interrogation Analyzer is an integrated spectral engine simultaneously covering multiple wavelengths for precise and Rapid Fiber Bragg Grating (FBG) sensor system measurements.

The device covers wide wavelength ranges and provides simultaneous measurements at very fast response rates and excellent wavelength resolution. High reliability (MIL STD 810F shock and vibration) is achieved through a rugged mechanical design with no moving parts. Periodic calibration is not required. High speed Input/output (I/O) is achieved through the use of USB2.0 communications (serial communications also supported at lower speeds).

The *WaveCapture*® FBGA Series employs a highly efficient Volume Phase Grating (VPG®) as the spectral dispersion element and an ultra-sensitive InGaAs array detector as the detection element, thereby providing high-speed parallel processing and continuous spectrum measurements. As an input, the device uses a tapped signal from the main data transmission link through a single mode fiber, then collimating it with a micro lens. The signal is spectrally dispersed with the VPG®, and the diffracted field is focused onto an InGaAs array detector. The control electronics read out the processed digital signal to extract required information. Both the raw data and the processed data are available to the host.

Key Features

- Wide wavelength range
- Ultra-fast response time (up to 5kHz)
- Excellent wavelength repeatability and resolution
- Athermal design enabling battery-operated portable operation
- High reliability for use in harsh environment
- Compact, card-mountable design

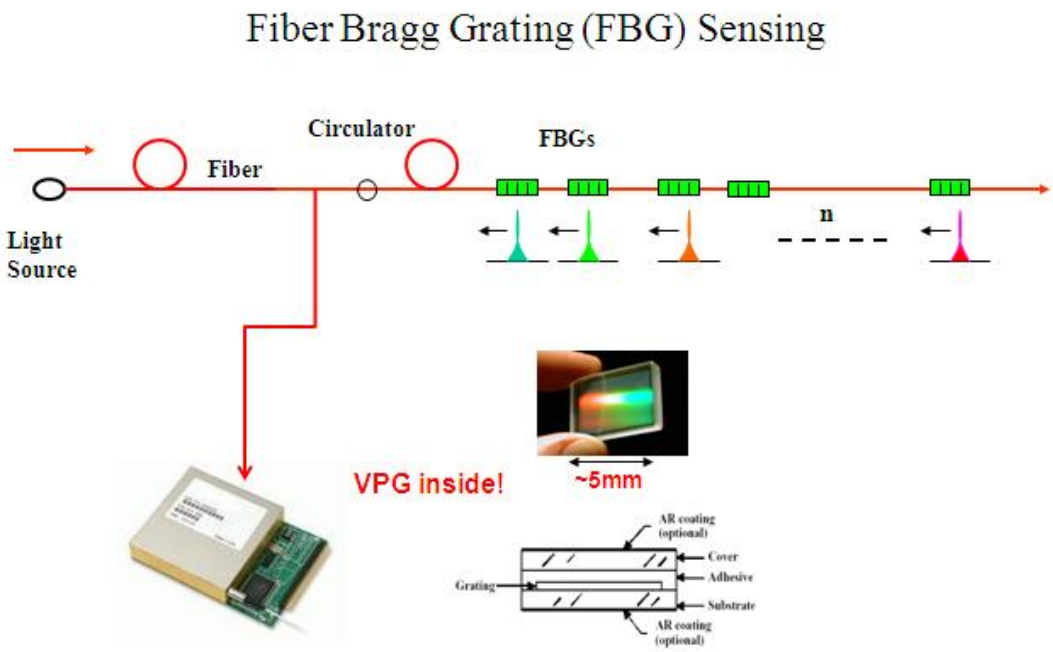

Consider using with:

- Mini-Wide Light Sources
- ASE Light Sources
- Fiber-optic Bundles & Accessories

BaySpec, Inc.
1101 McKay Drive
San Jose, CA 95131
USA

Tel: +1 (408) 512-5928
Fax: +1 (408) 512-5929
Web: www.bayspec.com
Email: sales@bayspec.com

© 2013 BaySpec, Inc. All rights reserved.

High Speed FBGA Analyzer

WaveCapture® FBGA Series

Specifications	Data	Unit
Standard Wavelength Ranges*	Standard: 1525-1565 Extended: 1510-1590	nm
Wavelength Repeatibility	± 5	pm
Wavelength Readout Resolution	1	pm
Minimum Detectable Wavelength Change	± 1	pm
Frequency response time (typ.)	Standard: ~5 Hz (RS232/USB1.1) Fast: ~5 kHz (USB2.0)	
Channel Input Power Range	-60 to –20 or specify	dBm
Power Resolution	0.1	dB
Size	96 x 68 x 15.8	mm^3
Interface	RS232 or USB (Fast board USB only)	
Operating Temperature	-5 to +70	°C
Software	BaySpec's *Sense 2020* evaluation software included, SDK for development	

* Other wavelengths available upon request

Sense 2020 Software

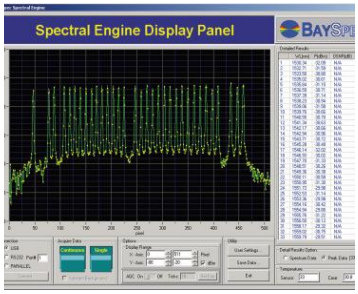

BaySpec's *Sense 2020* software included, a Windows-based package with flexible data acquisition, processing and output functionality

BaySpec SDK, a software development kit for new applications development and integration into to your host software systems.

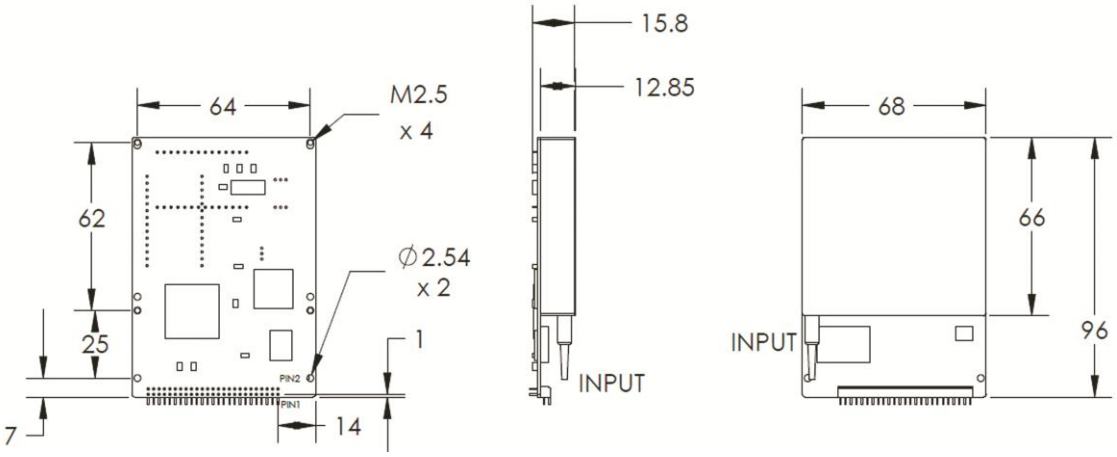

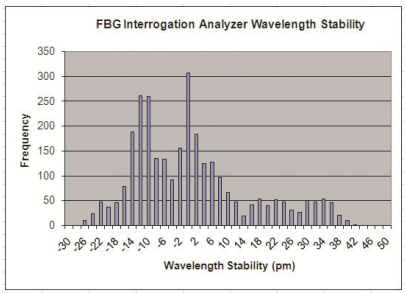

Order Info for Part Number:

FBGA - □ - □□□□ - □□□□ - □□

Frequency Response	Starting Wavelength	Ending Wavelength	Code	Connector Type
Specify response time:	Specify the starting wavelength i.e. :	Specify the ending wavelength i.e. :	NC	No connector
S Standard (~5Hz)	1280 1280.00nm	1320 1320.00nm	FA	FC/APC
F Fast (~5kHz)	1525 1525.00nm	1565 1565.00nm	FP	FC/PC
	1510 1510.00nm	1590 1590.00nm	SA	SC/APC
			SP	SC/PC
			LA	LC/APC
			LP	LC/PC
	Or specify	Or specify	XY	TBD

Note: standard length 1.0m

BaySpec, Inc.
1101 McKay Drive
San Jose, CA 95131
USA

Tel: +1 (408) 512-5928
Fax: +1 (408) 512-5929
Web: www.bayspec.com
Email: sales@bayspec.com

© 2013 BaySpec, Inc. All rights reserved.

The Boeing Company
929 Long Bridge Drive
MC 7949-5929
Arlington, VA 22202-4208

July 6, 2015

Mr. Dennis Krepp, Director
Office of National Security and Technology Transfer Controls
Bureau of Industry and Security
Department of Commerce
14th Street and Pennsylvania Avenue NW
Washington, DC 20230

Subject: RIN 0694-AF75, Revisions to the Export Administration Regulations (EAR); Control of Fire Control, Range Finder, Optical, and Guidance and Control Equipment the President Determines No Longer Warrant Control Under the United States Munitions List (USML)

Reference: Federal Register/ Vol. 80, No. 86/ Tuesday, May 5, 2015/ Proposed Rules

Dear Mr. Krepp,

The Boeing Company ("Boeing") appreciates the opportunity to provide comments on controls proposed for items moving to the Commerce Control List ("CCL") from Category XII of the United States Munitions List ("USML"). We strongly support the Export Control Reform effort and the Bureau of Industry and Security's work to create clear and precise controls for these items.

Boeing did not find any issues of concern in the proposed CCL listings. We are however concerned with certain controls proposed for USML Category XII listings because they will capture items currently controlled on the CCL. We shared the below comments with the Directorate of Defense Trade Controls on select proposed revisions to Category XII that will capture items currently controlled in ECCNs 6A002 and 7A003. Moving these items, which are in normal commercial use, from the CCL to the USML is not consistent with the objectives of Export Control Reform. Boeing does not manufacture these items so is not positioned to recommend alternative technical thresholds, but recommends that the stakeholder agencies use the technical advisory committees for assistance including an understanding of global and commercial availability.

Our comments address laser distance measuring devices, microbolometers, and guidance and navigation systems used on commercial satellites.

1. <u>Laser Distance Measuring Devices, XII(b)(3)</u>

The proposed regulatory text is:

(b)(3) Laser rangefinders having any of the following:
(i) Q-switched laser pulse; or
(ii) Laser output wavelength exceeding 1,000 nm;

No definition for 'rangefinder' is provided. The Merriam-Webster dictionary definition is:

1**:** an instrument used in gunnery to determine the distance of a target
2**:** a surveying instrument (as a transit) for determining quickly the distances, bearings, and elevations of distant objects
3**:** a usually built-in adjustable optical device for focusing a camera that automatically indicates the correct focus (as when two parts of a split image are brought together)

Without additional detail, this listing could capture commercial rangefinders using laser light. We do not manufacture such devices, but Boeing and many other manufacturers use laser interferometers, laser radar scanners, and laser theodolites to measure distances in surveying and in factory settings. Applications include the measurement of commercial aircraft aerodynamic symmetry, alignment of production elements, verification of production tooling accuracy, design of one-off custom parts, etc.

Some of the devices in common commercial use exceed the wavelength threshold in the proposed listing. For example, the 3D laser scanner 'Surphaser Model 105HSX', marketed by a company in Redmond WA, has a laser output of 1550 nm. Product details are at http://www.surphaser.com/pdf/Surphaser%20105HSX.pdf. Given the important role of laser rangefinders in commercial production processes, narrowly scoped controls that do not capture items in commercial use are critical.

Recommendation:
Provide a qualification in the control listing or a definition for 'rangefinder' that differentiates military applications from commercial usage. For example: ***'rangefinder' in this category means an instrument used in gunnery to determine the distance of a military target.***

2. Microbolometers, XII (c)(2)

Many items currently controlled in the Export Administration Regulations ("EAR") under 6A002 would move to International Traffic in Arms Regulations ("ITAR") control due to the broad proposed control for unencapsulated focal plane arrays.

The proposed regulatory text for USML XII (c)(2) is:

> (c)(2) Photon detector, microbolometer detector, or multispectral detector infrared focal plane arrays (IRFPAs) having a peak response within the wavelength range exceeding 900 nm but not exceeding 30,000 nm and not integrated into a permanent encapsulated sensor assembly, and detector elements therefor;

Boeing uses low-cost thermal imaging cameras for a host of applications in our factory environment including: temperature profiling, non-destructive inspection, and facilities checks to detect issues such as steam traps, electrical faults and failures, etc. To perform these tasks, we use cameras incorporating microbolometers operating in the 3,000-12,000 nm wavelength range. These cameras make use of focal plane arrays ("FPA") that are not encapsulated. Because the cameras contain FPAs described by (c)(2) and there are no element number thresholds in (c)(2) – as are found in (c)(12) - the cameras would have to be protected as ITAR items in accordance with the "see through rule". The cameras Boeing uses are currently classified as 6A003(b)(4), because they contain focal plane arrays controlled by 6A002(a)(3)(f) Such products are commercially available from companies such as the FLIR Corporation and are ubiquitous in industrial use. Control of such products on the USML is inconsistent with the objectives of export reform.

Recommendation:
Add a note to (c)(2) such that non-encapsulated FPAs incorporated into cameras are controlled in (c)(12), which has a element number threshold that will not capture these commercial items:

> ***Note to (c)(2): Non-encapsulated FPAs meeting the description contained in this listing and incorporated into cameras are subject to (c)(12) only.***

3. Guidance, navigation, and control systems and equipment, XII(d)(1) and (3)

The (d)(1) and (d)(3) proposed listings, as currently written, capture space-qualified[1] guidance and navigation systems currently used on commercial satellites controlled under the EAR. For example, Miniature Inertial Measurement Units (MIMUs) are currently classified as 7A003.d.2 but are also captured in XII(d)(1) and (3). However, the MIMUs used in commercial satellites are designed and built with higher radiation hardening requirements and other elements commonly used on space qualified hardware. Furthermore, items captured by (d) are available outside the United States. For example, the space qualified Astrix 200 made by Airbus Defence and Space (see http://www.space-airbusds.com/en/equipment/astrix-200.html) already has better performance than several of the specified thresholds in (d)(3) such as true north determination (if products were used for north finding), Angle Random Walk, Bias Stability and Drift Stability.

Recommendation:

- Revise the threshold values in XII(d) to avoid capture of MIMUs as follows: Bias Stability: <0.0003 deg/hr (3-sigma); ARW <0.0002 (3-sigma); True North Determination calculated as (bias stability) / (15.04 deg/hr earth rate): <20 micro-radians (3-sigma); Drift stability in 1g environment (same thing as bias stability): <0.0003 deg/hr (3-sigma).
- Alternatively, add language to the Note for paragraph (d)(1) to exclude guidance, navigation and control systems used on commercial satellites. Add a new, similar note for (d)(3).

[1] Per the definition of space qualified provided in Note 3 to USML Category XV(e).

Note to paragraph (d)(1): **This provision does not apply to items that are space qualified as defined in XV.** For aircraft and unmanned aerial vehicle guidance or navigation systems, see USML Category VIII(e). For rocket or missile flight control and guidance systems (including guidance sets), see USML Category IV(h).

***Note to paragraph (d) (3):* This provision does not apply to items that are space qualified.**

Thank you for the opportunity to provide comments. Please do not hesitate to contact me if you have any questions or need additional information. I can be reached at 703-465-3505 or via email at christopher.e.haave@boeing.com.

Sincerely,

Christopher Haave
Director, Global Trade Controls

Miriam Eqab
International Trade Compliance Counsel
Direct Line: 713.430.7721
Fax: 713.267.7670
Miriam.Eqab@BristowGroup.com

July 6, 2015

Regulatory Policy Division
Bureau of Industry and Security
U.S. Department of Commerce
Room 2099B
14th Street and Pennsylvania Avenue, NW
Washington, DC 20230

Subject: RIN 0694-AF75
Revisions to the Export Administration Regulations: Controls of Fire Control, Range Finder, Optical, and Guidance and Control Equipment the President Determines No Longer Warrant Control Under the United States Munition List

To whom this may concern:

Introduction

Bristow Group Inc. ("Bristow") appreciates the opportunity to comment on the proposed revisions to the Export Administration Regulations ("EAR") which changes control of articles under Category XII of the United States Munitions List ("USML"), Part 121 of the International Traffic in Arms Regulations ("ITAR") to the Commerce Control List ("CCL"). 80 Fed. Reg. 25798 (hereafter "Proposed EAR Revisions") and 80 Fed. Reg. 25821 (hereafter "Proposed USML Category XII"). Bristow appreciates the Bureau of Industry and Security's ("BIS") engagement with the industry as part of the Export Control Reform Initiative.

While Bristow welcomes the movement of certain articles from the USML to the CCL, we believe that the revisions will not change control of items which are now in normal commercial use to the CCL. As an operator of civilian aircraft for search and rescue ("SAR") operations, Bristow uses electro-optical/infrared ("EO/IR") systems, which include forward-looking infrared sensors, installed on aircraft in the normal course of business provided to our customers. As set forth in more detail below, Bristow believes that those EO/IR items described in amended Category XII(c)(16)(i) should be moved from ITAR to the CCL of the EAR.

Bristow and SAR Operations

Bristow Group

As the first civilian helicopter transport company to work in the oil and gas industry, Bristow has provided transportation, production management and related services for 60 years. The company offers point-to-point scheduled and charter transportation services, combining fixed-wing with rotary-wing services to clients around the world. In addition to providing helicopter transport services for energy companies and others, Bristow is a leader in SAR services.

Bristow's fleet of consolidated and unconsolidated helicopters includes almost 500 civilian helicopters (including light, medium and heavy aircraft).

SAR Operations

Bristow operates private sector SAR services in Australia, Canada, Norway, Russia, Tanzania and Trinidad, and public sector SAR services for the entire land and adjacent waters of the United Kingdom on behalf of the Maritime and Coastguard Agency ("MCA") of the U.K. Department for Transport ("DfT").

UK SAR Program

In 2012, Bristow Helicopters Ltd. ("Bristow UK," a U.K. affiliate of Bristow) was awarded a contract, known as the "GAP SAR U.K. Contract" to provide civilian search and rescue helicopters services from two bases in the United Kingdom on behalf of the U.K. DfT and its MCA. In 2013, the contract was extended to 10 U.K. bases. Under the full U.K. SAR contract, Bristow UK will operate 22 aircraft from 10 bases across the United Kingdom, strategically located near areas of high SAR incident rates. The contract runs until 2026.

Bristow UK's services for the DfT/MCA are purely civilian in nature. The MCA is an executive agency of the U.K. DfT, and it has no military or law enforcement function.[1] Bristow UK has a long history of providing SAR services in the United Kingdom, dating back to 1971. In total, Bristow UK has flown more than 44,000 SAR operational hours in the United Kingdom and conducted over 15,000 SAR missions, during which more than 7,000 people have been rescued by the company's crews and helicopters.

Bristow has led the industry in introducing new aircraft types and technology to the civil market. The SAR equipment it has developed has become the industry standard, resulting in Bristow UK being recognized with the Queen's Award for Innovation for its technical developments.

Private SAR

In response to recent incidents in safety, oil and gas industry leaders have increased their efforts to be equipped for accidents by securing SAR coverage for their operations. Given Bristow's existing relationships with these oil and gas industry leaders and Bristow's depth of experience in SAR, we have been awarded contracts for private SAR services. For these oil and gas industry clients, Bristow supplies a dedicated SAR helicopter and crew to cover exploration projects in remote areas. It requires specific expertise to conduct SAR operations, and Bristow has been a world leader in SAR for years, with experienced pilots, aircrew, paramedics, engineers and ground crew to conduct SAR operations safely and reliably.

---

[1] The definition of "armed forces" under Section 130.3 refers to "the army, navy, marine, air force, or coast guard as well as the national guard and national police, of a foreign country." Bristow believes that the reference to "coast guard" in Section 130.3 refers to an organization that performs in part military and law enforcement functions similar to the other military services. For example, the U.S. Coast Guard, which is presently under the Department of Homeland Security, states on its website that it is one of the nation's "five military services", and that it is a "military, multi-mission, maritime force offering a unique blend of military, law enforcement, humanitarian, regulatory, and diplomatic capabilities." Its missions include "port and waterway security", "defense readiness", drug interdiction", and "law enforcement". Based on that review, Bristow's U.K. affiliate's search and rescue services for the U.K. DfT and MCA are not "for the use of the armed forces of a foreign country."

SAR-Equipped Helicopters

In order to meet the demands of its customers, Bristow uses a variety of SAR-equipped helicopters, including the Sikorsky S-76, Sikorsky S-92[2], AgustaWestland 139, AgustaWestland 189, and H225 aircraft, all of which, in their standard configuration, are civilian aircraft.

The industry standard minimum requirement for a SAR helicopter is the hoist, which is capable of lifting the rescuer and victim at the same time. The aircraft is also equipped with a flight management system, which flies the aircraft over a pre-programmed search grid at sea. Additional basic SAR equipment includes emergency flotation devices on the skid landing gear, weather radar, and a PA system. However, these minimum equipment requirements are only effective for daytime SAR missions.

To perform nighttime and all weather SAR missions, the SAR helicopter must be equipped with equipment to assist in less-than-ideal flying conditions, such as low visibility, nighttime, and inclement weather. The main requirement for these SAR helicopters—in addition to the equipment mentioned above— is a de-icing system, specific navigation and search equipment, and extra medical equipment for taking care of survivors. Specifically, to perform nighttime SAR missions, the helicopter must be equipped with a forward looking infrared camera which can be incorporated into an EO/IR system, powerful external lighting, a searchlight, and a cockpit that is compatible with the use of night vision goggles.

To perform SAR operations 24 hours a day/7 days a week in any weather and on any terrain, helicopters must be equipped with an EO/IR system incorporating forward looking infrared sensors and thermal imaging camera technology.[3] See Attachment B which details technology used on Bristow SAR helicopters.

Bristow SAR helicopters[4] are currently equipped with an EO/IR system. Additionally, future purchases of SAR helicopters will require the installation of an EO/IR system on the helicopters.

EO/IR Systems

Bristow Use of EO/IR Systems

Bristow's use of EO/IR systems has been solely for commercial purposes, i.e. to provide civilian SAR services to customers. In fact, in the course of Bristow's review of EO/IR system manufacturers, it was apparent that EO/IR systems are used on many civilian SAR operations around the world, including aircraft and sea vessels. Some of the SAR operations using EO/IR

[2] See Attachment A for a diagram of a SAR-equipped S92 for use in Bristow's contract with the U.K. MCA.
[3] Bristow's SAR operations also include the use of night-vision goggles (NVGs) by pilots and crew. While NVGs are currently on the USML and the proposed revisions to Category XII, Bristow does not intend to comment on the classification of NVGs.
[4] Bristow also operates "Limited SAR" ("LIMSAR") helicopters. LIMSAR helicopters are not equipped with an EO/IR system. LIMSAR helicopters are also considered part of Bristow's SAR operations.

systems include the Royal Canadian Mounted Police[5], Norwegian Society for Sea Rescue[6], Irish Coast Guard (operated by CHC Helicopters)[7], Japan Coast Guard[8], Norway Ministry of Justice and Public Safety[9], and China's Ministry of Communications - Shanghai Salvage & Rescue Bureau[10].

Bristow's SAR services, both private and public, cover a variety of terrain and conditions. For many private SAR customers, Bristow SAR helicopters must be equipped to perform SAR operations over large stretches of water to reach oil and gas platforms and alternative landing sites. Additionally, over half the coverage area for the SAR services provided to the U.K. MCA is over water.[11] The EO/IR system allows the crew, and particularly the winch men, to pan over the water to look for distressed persons. Due to the difference in temperature between a human and the water, the infrared sensing capabilities of the forward-looking infrared sensors allow the crew to locate persons in the water from the aircraft, particularly where rough seas are encountered.

Similarly, for SAR operations over land, the benefits of the EO/IR system cannot be overstated. On rock, mountainous terrain, when it is difficult to maintain visibility on the distressed persons, the EO/IR system allows the crew to easily detect the person(s) on the ground. Once detected, instruments on the EO/IR system permit the crew to automatically maintain focus on the person(s), while the crew is able to prepare the winch.

An EO/IR system's performance heavily depends on stabilization and the image resolution, both of which are crucial to SAR operations. The stabilization capability of the EO/IR system counteracts the intense vibrations and motion of the aircraft to provide a clear image in the system viewer. Crews on the SAR helicopters require a high level of stability to locate distressed persons from far distances and in inclement weather conditions. To perform the rescue, the crew must track the distressed person as the aircraft positions for the rescue operation. Without a high level of stability, the tracking requires more time, when time is of the essence.

The measure of resolution refers to the number of pixels on an imaging component of the EO/IR system. An increase in the pixels improves the image quality and equips the crew with a clearer view of the scene. With the visual information from the image, the crew can quickly strategize on the most effective rescue operation.

Time is of critical importance in SAR operations particularly where the helicopters are required to operate to their maximum range which limits time available in the rescue area due to fuel constraints. Mere seconds can make the difference between life and death. Bristow's crews use the EO/IR systems to quickly search for distressed persons and track them in preparation for a rescue mission. Countless lives have been saved with the use of this technology. Due to

---

[5] http://www.airbushelicopters.com/w1/jrotor/71/rcmp.html
[6] http://www.flir.eu/marine/display/?id=42090
[7] http://www.chc.ca/news/2015/01/irish-coast-guard-completes-record-number-of-missions-with-new-helicopter-fleet.aspx
[8] http://www.helis.com/database/news/aw139_jpcg_3/?desktop=1
[9] http://www.aviationtoday.com/rw/public-service/SAR/Norwegian-SAR-AW101s-to-Get-FLIR-Star-Safire-Sensors_82511.html#.VZP2300o670
[10] http://www.defense-aerospace.com/article-view/release/3860/china-orders-two-sikorsky-s_76%2B-for-sar-(dec.-13).html
[11] See Attachment C – Map of U.K. SAR Territory.

confidentiality agreements with its customers, Bristow is unable to share details of SAR missions performed. Suffice to say, the EO/IR systems have been a vital to the success of our SAR operations in saving lives.

EO/IR System Purchases

Since at least 2002, Bristow has purchased and operated U.S. and foreign manufactured EO/IR systems on SAR helicopters. Based on the manufacturer's assessment, EO/IR systems are captured on the current version of USML Category XII(c). For this reason, Bristow has taken the necessary measures to ensure compliance with DDTC licensing and compliance requirements.

Depending on the destination of the aircraft, the origin of the EO/IR system, and the aircraft manufacturer, Bristow will require the EO/IR system to be exported and outfitted to the aircraft in several different ways. When using a foreign aircraft manufacturer, Bristow purchases the EO/IR system directly from the system manufacturer. The EO/IR system manufacturer exports the system to the location in which it will be fitted to the aircraft and/or the end-use destination of the SAR aircraft. In those cases, the EO/IR system manufacturer obtains the export license. In those cases, the EO/IR system manufacturer may be a foreign manufacturer or U.S. manufacturer.

Alternatively, when working with U.S. aircraft manufacturers, the EO/IR system is shipped to the aircraft manufacturer and fitted to the aircraft in the U.S. Once the aircraft is equipped with the EO/IR system and delivery is made available to Bristow, Bristow is responsible for obtaining the export license for the aircraft, which includes the EO/IR system.

Bristow currently owns or operates the following EO/IR systems on its SAR aircraft:

- FLIR Systems, Inc. Star Safire III (U.S. manufacturer)
- FLIR Systems, Inc. Ultra 4000 (U.S. manufacturer)
- Wescam MX-15HDi Surveillance System (Canadian manufacturer)

<u>Comments</u>

In response to the request in paragraph (4) of the "Background" portion of the preamble to the Proposed EAR Revisions, Bristow submits these comments to "provide specific examples of items…that would be controlled by the revised USML Category XII…that are now in normal commercial use."

As outlined above in our description of services, Bristow uses EO/IR systems and technology commercially to provide civilian SAR services to our customers around the world. We believe the EO/IR systems used by Bristow, currently captured by USML Category XII(c), would be included under the Proposed Category XII, specifically XII(c)(16)(i). For those items, which Bristow has identified as currently in commercial use, we strongly recommend that such items be transferred to the CCL of the EAR.

Administrative Burden

Due to the nature of Bristow's business, sharing technical data related to the EO/IR system is required. For this reason, Bristow must prepare Technical Assistance Agreements ("TAA") for the release of technical data associated with EO/IR systems. The process for securing approval

on a TAA from DDTC includes drafting the TAA, review by all parties to the TAA, submission to the DDTC, and, if the TAA is approved, obtaining signatures by all the parties to the TAA before export pursuant to the TAA can be undertaken. Additionally, Bristow must obtain nationality information and perform screening on all employees who may be given access to the technical data. Protective measures must be put in place to ensure no unauthorized access to the technical data. Compliance plans and training must be performed as part of the protective measures. Once the TAA is executed, the actual export licenses (DSP-5 or DSP-73) must then be applied for.

To apply for and obtain the necessary export licenses (whether temporary or permanent) usually takes several weeks to months, depending on the complexity of the purchase. Furthermore, because of the value associated with the purchase of several aircraft, Congressional Notification may be required for permanent exports of the civilian aircraft with the EO/IR equipment installed. While Bristow has thus far been successful in obtaining the necessary export licenses, there have been instances in which the approval has come uncomfortably close to Bristow's contractual deadlines for delivery of the helicopters.

Moreover, due to the nature of the helicopter services industry, the lead time on a commercial opportunity may only be presented several weeks in advance. Bristow is unable to offer its services without certainty that it will be able to obtain the necessary DDTC approval in time for the performance of services. These delays can put Bristow at a strategic disadvantage relative to its foreign competitors.

Moving the EO/IR systems used for SAR operations to the CCL would allow Bristow to more quickly react to industry demand and compete on an equal footing with foreign providers of SAR services. While DDTC has indicated that the average processing time for a license is between 25-29 days since January 2015[12], Bristow has experienced a wider variation in processing times, including over 40 days for a license application to be processed, in addition to the lengthy process of having a TAA reviewed, approved, and executed. According to BIS's Annual Report to the Congress for Fiscal Year 2014, BIS processes licenses in an average of 23 days.[13] Exports of technical data under the CCL would not require an executed TAA prior to application for a license to export thus eliminating the additional time required for TAA execution. Additionally, the CCL offers license exceptions that would potentially be available for Bristow's exports, making the export process more efficient by eliminating the requirement to obtain a license.

System Complexity

Due to the complexity of the EO/IR system and its components, exporting an EO/IR system independent from the aircraft to which it will be equipped is difficult. All aircraft currently used by Bristow for SAR operations are civilian aircraft, listed on the CCL. However, certain models of SAR helicopters must be equipped with an EO/IR system by the aircraft manufacturer. Internal wiring for the EO/IR system is not simple add-on equipment but must be embedded into the aircraft during the manufacturing process. Once the aircraft is equipped with the entire EO/IR system, i.e. external attachments and monitors, the aircraft is then classified under USML

[12] http://pmddtc.state.gov/metrics/index.html
[13] Bureau of Industry and Security - Annual Report to the Congress for Fiscal Year 2014, pg. 7.

Category VIII(a)(11).[14] For this reason, Bristow is required to export the entire aircraft pursuant to a license obtained from the DDTC, as opposed to obtaining a license only for the EO/IR system.

Removing the EO/IR system, including its parts and components, from the USML would eliminate the requirement that the entire aircraft be included on the USML. This would significantly reduce the burden of moving aircraft globally.

Foreign Availability

EO/IR systems are available by foreign manufacturers. Below is a table of available EO/IR systems in the marketplace:

PRODUCT NAME	COMPANY	COUNTRY OF MANUFACTURE
Star SAFIRE 380-HD[15]	FLIR Systems, Inc.	USA
MX-15[16]	L-3 Wescam	Canada
Toplite EOS[17]	Rafael	Israel
Agile 2[18]	Thales Optronique	France
Euroflir 350[19]	Sagem	France
MOSP-3000HD[20]	Israel Aerospace Industries	Israel
DCoMPASS[21]	Elbit Systems	Isreal
EOST-46[22]	Selex ES	Italy

For some SAR helicopters, Bristow has used foreign manufactured EO/IR systems on foreign manufactured aircraft. For example, the Wescam MX-15 is used on Bristow's H225s. The MX-15 was exported from Canada pursuant to a Canadian export license obtained by the system manufacturer. The use of a foreign manufactured EO/IR system has simplified the global movement of the aircraft and presented opportunities which would not have been available for an aircraft embedded with a U.S.-manufactured EO/IR system since the aircraft in its entirety is not controlled, but simply the EO/IR system. While the ease of movement was not the sole reason for Bristow's choice of a foreign EO/IR system manufacturer, the benefit of a non-U.S. manufactured EO/IR system is apparent.

Bristow believes that U.S. EO/IR system manufacturers would be in a better position to present information on foreign competition and any differences that exist among the products in the industry. As an operator of EO/IR systems, Bristow can attest to the fact that there are foreign manufactured systems that offer the same capabilities as those manufactured in the United States.

[14] EO/IR systems are identified as a "mission system" defined in USML Category VIII, Note 1 to paragraph (a)(11), as " 'systems' that are defense articles that perform specific military function such as by providing military communication, electronic warfare, target designation, surveillance, target detection, or sensor capabilities."
[15] http://www.flir.com/surveillance/display/?id=64812
[16] http://www.wescam.com/wp-content/uploads/PDS-MX-15-63133M-July-2014.pdf
[17] http://www.rafael.co.il/marketing/SIP_STORAGE/FILES/8/1278.pdf
[18] https://www.thalesgroup.com/sites/default/files/asset/document/agile_2_a4_en_072012_ref_099a_corrected.pdf
[19] http://www.sagem.com/product/euroflir-350
[20] http://www.iai.co.il/Sip_Storage//FILES/0/41030.pdf
[21] http://elbitsystems.com/Elbitmain/files/DCoMPASS_Special_Missions.pdf
[22] http://www.selex-es.com/documents/737448/17606805/body_mm08114_EOST46_LQ_.pdf

Because these EO/IR systems are readily available from foreign manufacturers these systems do not appear to provide a critical military or intelligence advantage to the United States, and thus, we believe the item should not meet the criteria for continued control under ITAR. EO/IR systems described at Category XII(c)(16)(i) that are manufactured in the United States should be moved to the CCL. It is also worth noting that the Wassenaar Arrangement Munitions List (Category 15), does not appear to specifically list an EO/IR system like those described in USML Category XII(c)(16)(i).

Technical Specifications and Parameters

As outlined above, EO/IR systems with stabilization and high resolution imaging capabilities are required to provide adequate civilian SAR services. While they may provide some military function, their normal commercial use and their foreign availability indicate that they do not provide a critical military advantage sufficient to be included on the USML. Instead, higher resolution and stabilization, allow Bristow and other SAR providers to perform better and save more lives. Additionally, safety of the crew is improved with the ability to operate safely in low light and visibility. The resolution and/or stabilization should not be the criteria used to determine whether an EO/IR system is captured on the USML. These criteria are essential to successful SAR missions.

As a purchaser of EO/IR systems for normal commercial use, Bristow is not in a position to comment on what specifications and parameters of EO/IR systems provide a sufficient military advantage to warrant being placed on the USML rather than the CCL. However, Bristow is aware of certain optional functions that are available on EO/IR systems which Bristow has declined to obtain. Bristow believes that some of these functions provide examples of functions that may materially enhance military capability and are less likely to be used in commercial applications. For example, EO/IR systems can be programmed to provide laser-guided munition capabilities and counter-measures. These functions are of no use to civilian SAR operations and would serve as differentiating characteristics of those EO/IR systems that should be captured by the USML.

While Bristow is aware of optional capabilities of EO/IR systems, described above, we are not EO/IR system manufacturers and thus are not completely educated in all the characteristics, specifications and capabilities of all EO/IR systems. While we are able to comment on the civilian use of higher resolution and stabilization for SAR operations, Bristow does not have full knowledge of all other specifications. For this reason, we believe the EO/IR system manufacturers would be in the best position to further comment on what additional parameters would be optimal for differentiating between EO/IR systems that should be on the USML.

EAR Jurisdiction

Bristow recommends that EO/IR systems of the type used for civilian SAR operations which are covered by proposed USML Category XII(c)(16)(i) be moved to the CCL, specifically ECCN 6A003.

Conclusion

Bristow obtains and operates EO/IR systems for normal commercial use. Proposed USML Category XII controls these same EO/IR systems. Bristow believes that EO/IR systems used in

civilian SAR operations should be removed from the USML and instead controlled on the CCL for the following reasons:

- Bristow, along with other helicopter operators, use EO/IR systems described under amended Category XII(c)(16)(i) in the normal course of commercial business.
- The EO/IR systems used by Bristow are invaluable to the success of SAR operations and saving lives.
- EO/IR systems used by Bristow are available from foreign manufacturers.
- The complexity and time-consuming nature of ITAR-controlled licensing procedures (including Congressional Notification requirements) hinder Bristow's commercial opportunities.

Thank you again for affording us the opportunity to provide comments. Please do not hesitate to contact me if you have any questions or need additional information. I can be reached at 713-430-7721 or via email at Miriam.eqab@bristowgroup.com.

Sincerely,

Miriam Eqab
International Trade Compliance Counsel

Attachment A

Bristow Sikorsky S-92 Helicopter Equipped for U.K. SAR Program with a Wescam EO/IR System

Bristow S.92 Search & Rescue Helicopter

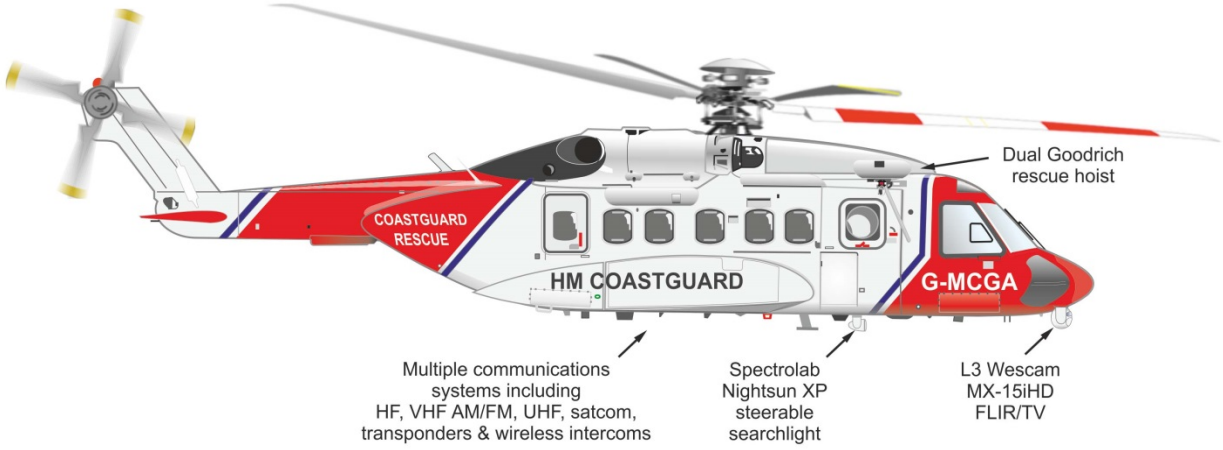

Attachment B

Screenshot from Bristow's SAR Website

http://www.bristowsar.com/index.php/uk-search-and-rescue/technology/

Bristow
Search and Rescue

HOME | UK SAR | RECRUITMENT | OPERATIONS | PEOPLE | MEDIA

TECHNOLOGY

UK SAR
GAP SAR
SAR BASES
FLEET
TECHNOLOGY
RECRUITMENT

Technology

Bristow Helicopters has led the industry in introducing new aircraft types and technology to the civil market and the search and rescue equipment developed by the company has become industry standard, resulting in Bristow Helicopters being recognised with the prestigious Queens Award for Innovation for the company's technical developments.

Our new search and rescue helicopters are fitted with a raft of state of the art technology, some of which has never before been used in commercial search and rescue aircraft.

Night Vision Goggles

Bristow Helicopters has gone to great lengths to obtain the necessary International Traffic in Arms Regulations (ITAR) export licence in order to invest in the best possible night vision goggle (NVG) technology available to the civil market for its SAR crews. In terms of civilian operations, Bristow's S-92 SAR aircraft are the first type in Europe to be certified for NVG and have the first "glass cockpit" to be certified NVG compatible. The technology is essential when responding to night time incidents, particularly during the short winter days when operations can extend into the hours of darkness.

Forward-looking infrared (FLIR)

Our SAR aircraft have improved forward-looking infrared (FLIR) and thermal imaging camera technology for more effective searches and high illumination lighting to make winching easier and safer. This is particularly useful when operating in confined spaces or conducting cliff rescues. The long range fuel tanks allow us to operate across the vast distances we are covering.

Wireless communication

The UK SAR S-92s are the first aircraft in Europe to be fitted with Trulink® wireless capabilities for communications between the aircraft and crew, while the wireless intercom system allows winchmen to not only communicate with the aircraft but also to communicate with nearby vessels in the event that they are left behind at the scene. A much improved external public address system allows the SAR crew to communicate more effectively with casualties on the ground below.

Medical capabilities

The medical zone intercom allows the cabin and cockpit to be split into isolated zones, meaning medical teams can work on a patient without the flight crew being distracted. Improved cabin lighting, including emergency white light, will enable advanced medical procedures to be carried out onboard. In addition, the cabins are fitted with 230 volt ac power outlets so that the SAR aircraft can operate advanced medical equipment onboard. Bristow has designed a bespoke cabin layout to accommodate more casualties and medical equipment safely.

CLICK HERE TO FIND OUT MORE ABOUT BRISTOW GROUP

HOME | UK SAR | RECRUITMENT | NEWS | PEOPLE | OPERATIONS | CONTACT

LOGIN | CONTACT US | SITE MAP | PRIVACY POLICY | © 2015 BRISTOW GROUP INC.

Attachment C

Map of Coverage Area for U.K. SAR

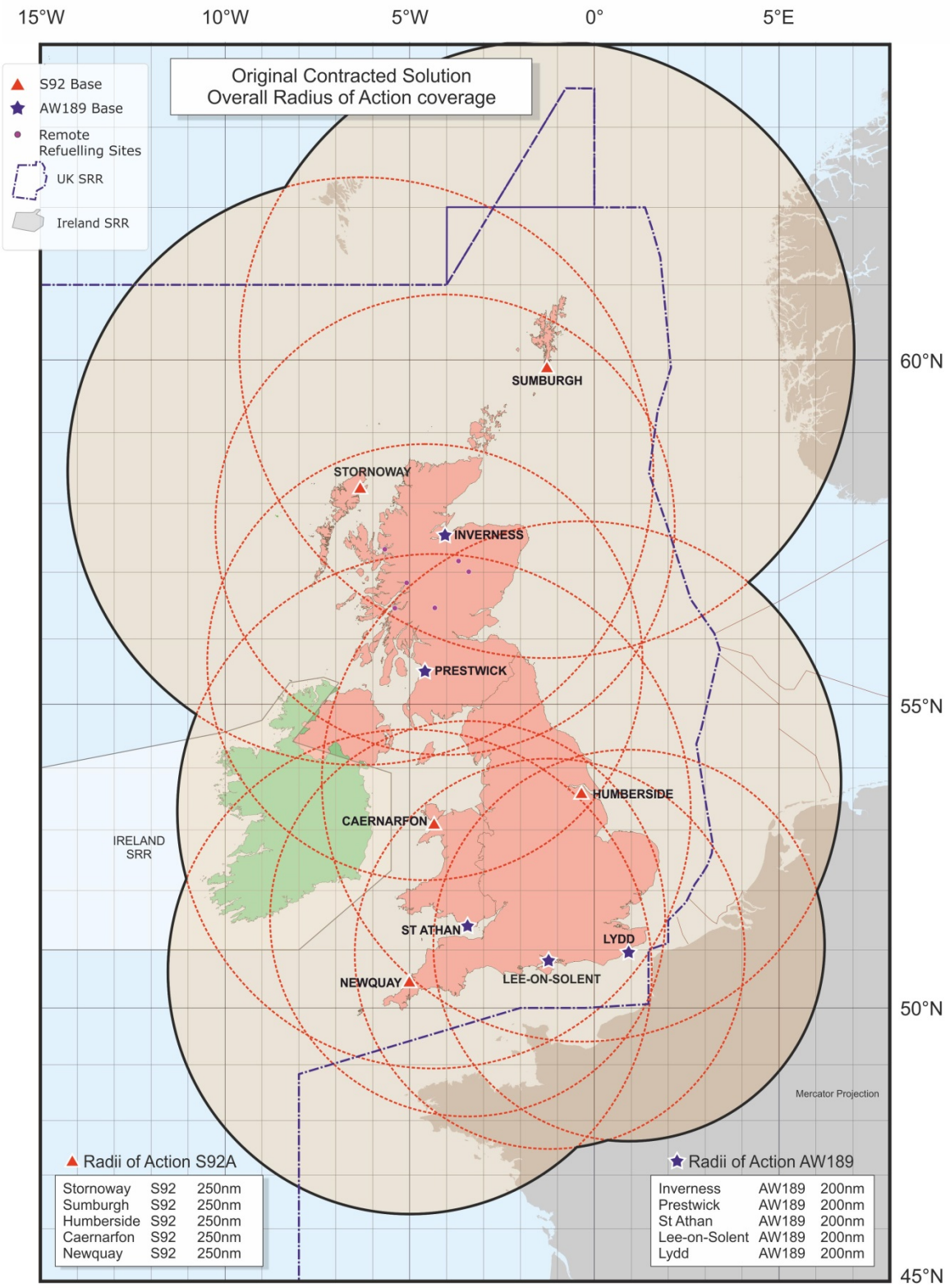

PUBLIC SUBMISSION

As of: 6/25/15 1:59 PM
Received: June 23, 2015
Status: Pending_Post
Tracking No. 1jz-8jl4-2zzl
Comments Due: July 06, 2015
Submission Type: API

Docket: BIS-2015-0016
Revisions to the Export Administration Regulations (EAR): Control of Fire Control, Range Finder, Optical, and Guidance and Control Equipment the President Determines No Longer Warrant Control Under the United States Munitions List (USML)

Comment On: BIS-2015-0016-0001
Export Administration Regulations: Control of Fire Control, Range Finder, Optical, and Guidance and Control Equipment that No Longer Warrant Control under the U.S. Munitions List

Document: BIS-2015-0016-DRAFT-0004
Comment on FR Doc # 2015-10353

Submitter Information

Name: JONATHAN Kane
Address:
120 Derry road
Hudson, NH, 03051-3712
Email: jon.kane@clearalign.com
Phone: 6038892116x224
Organization: Clear Align LLC

General Comment

See attached file(s)

Attachments

Public Comments

6/17/2015
Subject: Response to EAR Proposed Rules

From:
Dr. Jonathan S. Kane,
Chief Technology Officer
Clear Align, LLC
Jon.kane@clearalign.com
603-889-2116 x224

Clear Align is a supplier of high precision optical assemblies in the Visible, SWIR, MWIR and LWIR including components, fixed focal length lenses and zoom lenses. It is also the owner of "irZoom" one of the world's leading companies in infrared zoom lenses. More information can be found on our websites, www.clearalign.com and www.irZoom.com .

This response is a public response for the proposed EAR Regulations: Control of Fire Control, Range Finder, Optical and Guidance and Control Equipment proposed by the Industry and Security Bureau on 5/05/2015.

This comments concerns itself with **Rule 6A615, parts C and G on pages 78 and 79.**

1 RULE 6A615.C

1.1 Discussion of the Rule

Rule 6A615.C controls certain common infrared materials specifically Zinc Sulfide, Zinc Selenide, Germanium or Chacogenide optics.

1.2 Our comment to the rule

The rule will capture some of our lenses that are currently EAR99 because the control only goes by size of the blank. In other words the theory is that the size of the optic determines end use. We respectfully disagree with this position and in our working group could only identify "specially designed for military use" as a "bright line". Generally where a given optic can be used to look at anything, the bright line does not really exist very clearly.

We have two commercial lenses that contain lenses that are greater than 6 inches in diameter. They are EAR99 (MirZ 3022 and our MirZ 4022). They would be captured by this rule purely on the size, not the end use End Use or End User.

According to this rule, if even one element in the lens system is made from any of these materials and in the sizes specified the entire lens system is captured. This would move us backwards from EAR99 to control with no added security benefit.

There is significant foreign availability of these materials. These materials are are produced worldwide in Russia, China, and Belgium. Controlling these materials in the United States does not add to the security of the US due to foreign availability. The one material we are NOT aware of existing worldwide is AMTIR4 and AMTIR5 licensed by Lockheed Martin.

Examples:

http://www.umicore.com/en/
http://www.made-in-zelenograd.com/companies/ojsc-germanium/ \
http://www.made-in-china.com/showroom/jingze001/product-detailmMkQPsjJnwYZ/China-Germanium-Polished-Window.html
http://www.iiviinfrared.com/Optical-Materials/ge.html

Dual use items include Intel Germanium based platens used for the semiconductor industry, Israeli manufacturers producing similar zoom lenses such as Ophir, RP Optical Lab and Temmek Optics.

1.3 Requested action

We request that the government delete 6A615.C

In its place we suggest:

AMTIR 4 or AMTIR 5 optics blanks specifically designed for military use, being flat or initially curved and having any of the following:

c.1. Diameter exceeding 3 inches and thickness exceeding 1.5 inches
c.3 Diameter exceeding 5 inches
c.3 Length and width both exceeding 3 inches and thicknesses exceeding 1.5 inches OR
c.4 Length and width both exceeding 5 inches.

2 RULE 6A615.G

2.1 Discussion of the Rule

Part G: is worded: Combat Vehicle Tactical Wheeled Vehicle Naval Vessel or Aircraft pilotage systems or equipment incorporating a variable field of view or of regard and incorporating a photon detector-based infrared focal plane array having less than 640 elements.

2.2 Our Comment to the rule

Another way of saying "variable field of view" is "Zoom Lens".

Since our company has a division called "IrZoom" this directly targets all of our products such as the MirZ 1522, Mirz 3022, MirZ 4022, LirZ 33/99, LirZ 206. These products have been deemed EAR99 and would now be captured by 6A615..G as it could be argued that "equipment" is broad enough to include the zoom lens. While they are designed for 640 x 512 x 15 micron arrays it potentially could be argued that they are intended for larger format.

Also the rule is a bit unclear in that saying "640 elements" implies then that a square FPA is approximately 25 x 25 pixels. We think the government meant "640 x 480" elements but are unsure as to intent.

In addition, the wording of a focal plane array having less than 640 elements, also implies that simple temperature reading devices such as and infrared thermometer for the housing industry should be controlled if they incorporate a small simple zoom lens.

Zoom Lenses have significant foreign availability with suppliers from Singapore, China, France, Japan, Israel and Germany.

Examples:

http://www.wavelength-tech.com/

http://temmek.com/

http://www.rp-optical-lab.com/

http://www.ophiropt.com/infrared-optics/infrared-optics-home

We request that part G be modified:

Combat Vehicle Tactical Wheeled Vehicle Naval Vessel or Aircraft pilotage systems incorporating a photon detector-based infrared focal plane array having less than 640 elements in any dimension.

COHERENT

June 30, 2015

Regulatory Policy Division
Bureau of Industry and Security
U.S. Department of Commerce
14th Street and Pennsylvania Ave., N.W.
Room 2099B
Washington, D.C. 20230

Subject: Revisions to the Export Administration Regulations (EAR): Control of Fire Control, Range Finder, Optical, and Guidance and Control Equipment

To Whom It May Concern:

Coherent is pleased to present these comments in response to the Bureau of Industry and Security's request for public comment in Federal Register BIS proposed rule: 80 Fed. Reg. 25798 (May 5, 2015) pp. 25799-25800; DDTC proposed rule: 80 Fed Reg. 25821 (May 5, 2015) pp. 25823-25824

The goal of this letter is to comment on the proposed Category XII list moving Commerce Control List (CCL) items to the US Munitions List. With developing technology and foreign availability, and to increase the clarity of section 6A005 of Category 6 Coherent has strong concerns regarding the classification of 6A005 items under the US Munitions List Category XII. We believe it is not justified and we present the reasons why these items are appropriately classified under 6A005.

Since the last major revision of laser export controls, the technology has advanced considerably during that time. In particular, the commercial availability of lasers offered by manufacturers located within Wassenaar countries has proliferated, and the capability of Chinese and other non-Wassenaar laser manufacturers has increased very significantly, such that many lasers that were not commercially available outside Wassenaar countries two years ago are now readily available. This trend will continue in the near future.

We thank you for your attention to our comments, and remain at your disposal to answer any questions you may have.

Sincerely,

Kevin Sinclair
Senior Manager Worldwide Trade Compliance
Coherent Inc

Enclosures: Comments

Comments on "Category XII" of Items on CCL:

Coherent proposes that ECCN 6A005 items provided in the Federal Register not be transferred to the US Munitions List for the following reasons:

A. Foreign Availability: Virtually all lasers, components and optical equipment manufactured in the United States are currently manufactured in volume with the same performance criteria in Germany and/or Russia and/or Japan and/or the U.K., and many are manufactured in a number of other Wassenaar countries as well. As a result, such lasers, components and optical equipment should fall under the Commerce Control List. Further, many lasers, components and optical equipment controlled by 6A005 are available in non-Wassenaar countries, which makes for products that are readily available worldwide.

   Both United States and Wassenaar countries companies have products available in non-Wassenaar countries through subsidiaries which developed some of the laser technologies by producing components.

B. All items in 6A005 do not meet the criteria for Category XII items:

   "Items almost exclusively available from the United States and which provide a critical military or intelligence advantage to the United States".

   Items controlled under 6A005 are commercial items for commercial or research use. Generally, lasers are industrial and lab tools used to treat materials, such as marking, drilling, cutting, welding, annealing and brazing, or sense or perform spectroscopy. Such lasers are not WMD or WMD-capable unmanned delivery system. The lasers controlled by 6A005 were not specially designed for producing or using WMDs, special nuclear materials or WMD-capable unmanned delivery systems.

   As explained above, many of the items controlled by 6A005 are available in Wassenaar and non-Wassenaar countries, and therefore are not an appropriate classification for Category XII because they are not almost exclusively available in the United States. We are not aware of how the items controlled under 6A005 provide a critical military or intelligence advantage to the United States. It certainly cannot be the case that every controlled item in 6A005 provides a critical military or intelligence advantage to the United States.

   If there are specific items controlled by 6A005 that provide a critical military or intelligence advantage to the United States and are available only in the United States or that meet criteria we recommend that the Administration highlight those items for a discussion regarding special treatment and control on the US Munitions List

C. 6A005 Items Are Not on the Sensitive List or Very Sensitive List of the Wassenaar Treaty: The items controlled by 6A005 are on the Basic List of dual use items under the Wassenaar Treaty. Not one item in 6A005 list is on the Sensitive List or Very Sensitive List. This supports that the 6A005 items are not appropriate for classification under Category XII. Coherent submits that the complete absence of any 6A005 item on the two special Wassenaar annexes is compelling and objective evidence that 6A005 items do not provide a critical military or intelligence advantage to the United States or any of the other treaty countries.

D. It is the Goals of the Administration's Export Control Initiative to Require Licenses on for the subject items to most Wassenaar Countries? If all items are classified as Category XII they would require a license to export them to Europe, Australia, Korea and Japan. This would substantially increase the burdens on U.S. exporters, reduce U.S. exports, benefit foreign competitors and provide incentive to use non-U.S. production facilities. As noted above, most items currently are or can be manufactured in German, U.K., Russia and/or Japan.

E. Enforcement of export controls among nations participating in the Wassenaar Arrangement. The Wassenaar Arrangement has proven to be effective for standardizing controls across the 40 member nations, far more effective than unilateral controls imposed by any one country. Placing this proposition on the table at Wassenaar would undermine U.S. credibility in future negotiations.

Attachment 1: Impact to Coherent, Foreign Market and Foreign Availability

Description of proposed change CAT XII	Impact to Coherent? Market Competition and Foreign Availability
Military Lasers	
Laser spot trackers or laser spot detection	No
Aiming or target illumination systems or equipment	No. ITAR when specially designed
Laser target designators	No. ITAR when specially designed
Laser rangefinders	No. ITAR when specially designed
Laser rangefinders or range-gated systems	No. ITAR when specially designed
Lasers operating at a wavelength exceeding 3,000 nm that provide a modulated output *Definition Modulated Output--pulse or triggered laser. Control the output power dynamically is a form of modulation.*	No.
Semiconductor lasers	
Tunable semiconductor laser having an output wavelength exceeding 1,400 nm and an output power greater than 1 W	**No. . .**
Non-tunable single transverse mode semiconductor laser having an output wavelength exceeding 1,510 nm and either an average output power or continuous wave (CW) output power greater than 2 W	**Yes** Future impact to COHR for STM at 1510nm+ possible in 2+ years..
Non-tunable multiple transverse mode semiconductor laser having an output wavelength exceeding 1,900 nm and either an average output power or CW output power greater than 2 W	**Yes-** We are currently developing 1900nm diode technology that would be rated to >2W, targeting non-military markets – both in materials processing and medical applications. We believe that our European competitors are doing the same, since there is significant and growing non-military markets pull for higher power >1900nm diodes. Since we can expect our European competitors to release >2W >1900nm diodes in response to the growing market demand, a military categorization for this product would be quite harmful to US suppliers by locking US suppliers out Non-military market drivers for >2W >1900nm diodes: Both medical and plastic welding applications typically require powers at >1900nm much higher than 2W – often in the 10s or even 100s of Watts. Thus there is a drive to produce >1900nm diode lasers rated to ever higher powers, enabling reduced costs by decreasing the number of diode lasers needed. Examples of non-US manufacturers of >1900nm diodes: We are aware of a number of non-European manufacturers of >1900nm diode lasers, including DILAS, M2K and Frankfurt Laser (all based in Germany) and Brolis Semiconductors (based in Lithuania). Current capabilities for these companies appear to be about 1W at >1900nm and we can expect these capabilities to surpass 2W in the upcoming years due to the growing market pull for higher power >1900nm diodes.
Laser stacked arrays	
(i) Having an output wavelength not exceeding 1,400 nm and a peak pulsed power density greater than 3,300 W/cm2;	**Yes** – we are selling (808nm) stacks having a PPPD of 5,000 W/cm^2 today into the commercial, non-defense market (these are 200W/bar conduction cooled stacks with a 400um bar-to-bar pitch), and expect this business to grow. Our European competitors have the same capabilities – 5kW/cm^2 are not technically difficult to achieve. Limiting US suppliers to 3.3kW/cm2 while European suppliers could continue to sell 5kW/cm2 and higher PPPD stacks would be quite harmful to

	US suppliers. SCD is an Israeli company. They make their own bars and stacks. See the attached link to the webpage for SCD's 200W/bar QCW stacks. http://www.scd.co.il/Ruby-E-Series If you click on Typical Performance, you will get a list of specs which show that they are using 200W/bar on a 400um pitch – this equates to 5kW/cm^2.
(ii) Having an output wavelength exceeding 1,400 nm but less than 1,900 nm and a peak pulsed power density greater than 700 W/cm2;	no
(iii) Having an output wavelength exceeding 1,900 nm and a peak pulsed power density greater than 70 W/cm2;	Yes – DILAS, a German company, has already been offering a 1940nm stacked array having a peak pulsed power density of 70W/cm^2 since 2011. With advances in >1900nm technology since then, it would be trivial for them (or various other non-US suppliers) to offer higher peak pulsed power density stacks today. A military categorization for this product would enable only non-US manufacturers to serve the growing medical and materials processing markets for high performance >1900 nm diode stacks.
CW Lasers	
(iv) Having an output wavelength exceeding 1,900 nm, and either an average output power or CW output power greater than 20W	no
Other	
Developmental lasers and laser systems or equipment funded by the Department of Defense	no
Definition-- Tunable	*"Tunable"--The ability of a "laser" to produce a continuous output at all wavelengths over a range of several "laser" transitions. A line selectable "laser" produces discrete wavelengths within one "laser" transition and is not considered "tunable".*

July 6, 2015

Sent via email to: publiccomments@bis.doc.gov and DDTCPublicComments@state.gov

Regulatory Policy Division
Bureau of Industry and Security
U.S. Department of Commerce
Room 2099B
14th Street and Pennsylvania Avenue NW
Washington, DC 20230

and

Office of Defense Trade Controls Policy
Directorate of Defense Trade Controls
Bureau of Political Military Affairs
Department of State
Washington, DC 20522

Subjects: RIN 0694-AF75 - Revisions to the Export Administration Regulations (EAR): Control of Fire Control, Range Finder, Optical, and Guidance and Control Equipment the President Determines No Longer Warrant Control Under the United States Munitions List (USML)

and RIN 1400-AD32 Amendment to the International Traffic in Arms Regulations: Revision of U.S. Munitions List Category XII

Dear Sir or Madam:

The Computing Technology Industry Association (CompTIA) is a non-profit trade association serving as the voice of the information technology industry. With approximately 2,000 member companies, 3,000 academic and training partners and nearly 2 million IT certifications issued, CompTIA is dedicated to advancing industry growth through educational programs, market research, networking events, professional certifications and public policy advocacy.

Thank you for the opportunity to provide comments on the Export Administration Regulations (EAR) proposed rule which describes how articles the President determines no longer warrant control under Category XII (Fire Control, Range Finder, Optical and Guidance and Control

Equipment) of the United States Munitions List (USML) of the International Traffic in Arms Regulations (ITAR) would be controlled under the Commerce Control List (CCL) by creating new ``600 series" Export Control Classification Numbers (ECCN)s 6A615, 6B615 and 6D615 for military fire control, range finder, and optical items, by revising ECCN 7A611 and by creating new ECCNs 7B611, 7C611 and 7E611 for military optical and guidance items. In addition, for certain night vision items currently subject to the EAR, this rule proposes to expand the scope of control, eliminate the use of some license exceptions, and create new ECCNs for certain software and technology related to night vision items. This proposed rule would also expand the scope of end-use restrictions on certain exports and reexports of certain cameras, systems, or equipment and expand the scope of military commodities described in ECCN 0A919.

The Department of State rule proposes to amend the ITAR to revise Category XII of the USML to describe more precisely the articles warranting control on the USML.

Optics technologies are playing a key role across many industries today. In the commercial automotive sector for example, LIDAR, radar, and camera systems are being used to anticipate and prevent crashes and significantly improve passenger safety. In early June, the National Transportation Safety Board recommended vehicle manufacturers install forward collision avoidance systems as standard features on all newly manufactured passenger and commercial motor vehicles since the technology would be capable of preventing nearly 4,500 rear-end crashes per day. Similarly, in the aviation sector, LIDAR technologies are playing a key role in providing the imagery necessary for the provision of adequate geographic information as a part of the FAA's NextGen program, aimed at improved aviation efficiency and safety. Given these key use cases, and many others, CompTIA's members are committed to ensuring that these critical technologies continue to advance and provide vital public and private sector benefits, as changes to the USML Category XII take place.

CompTIA has the following comments on RIN 1400-AD32 and RIN 0694-AF75:

> ***Cat. XII(b)(6): Light detection and ranging (LIDAR), laser detection and ranging (LADAR), or range-gated systems or equipment, incorporating or specially designed to incorporate an article controlled in this subchapter (MT if designed or modified for rockets, missiles, SLVs, drones, or unmanned aerial vehicle systems capable of delivering at least a 500 kg payload to a range of at least 300 km);***
>
> ***Note to paragraph (b)(6): This paragraph does not control LIDAR systems or equipment for civil automotive applications having a range limited to 200 m or less.***

This proposed provision would capture LIDAR systems used in self-driving car applications even if the system is solely designed for civil automotive applications. This is because it would not qualify for the "Note to paragraph (b)(6)" (hereinafter, referred to as "Civil Automotive Exception"). Specifically, a system would not meet the criteria of the Civil Automotive

Exception if the range of the LIDAR system exceeds the range of 200m. It is our belief that many commercial companies are developing self-driving car LIDAR technology that would indeed exceed 200m. In particular, we believe that the range must exceed 200m for safety reasons. For example, the system's range needs to be greater than 200m when the vehicle is making unprotected left turns in the presence of cars that are driving at higher speeds regardless of whether they decelerate or not. A greater than 200m range is also necessary for spotting oncoming emergency vehicles so that the self-driving car can safely pull over and move out of the path of such vehicles. Furthermore, in rural areas where speed limits tend to be higher, being able to detect oncoming traffic at a greater range than 200m is again important from a safety perspective.

Recommendation: We request that the range in the Civil Automotive Exception be increased to 400m to account for current technology developments geared towards safety on the road as well as future innovation in this space.

> ***Cat. XII(b)(8): LIDAR, LADAR, or other laser range-gated systems or equipment, as follows (MT if designed or modified for rockets, missiles, SLVs, drones, or unmanned aerial vehicle systems capable of delivering at least a 500 kg payload to a range of at least 300 km): (iii) Systems or equipment having an electrical bandwidth of 100 MHz or greater, and incorporating or specially designed to incorporate either a Geigermode detector array having at least 32 elements or a linear-mode detector array having at least 128 elements.***

This proposed provision potentially captures LIDAR systems used in civil automotive applications. Specifically, "incoming" bandwidth refers to detector bandwidth and determines minimum resolvable pulse length, which, in turn, drives minimum detectable feature separation. For a self-driving car, a sufficiently short light pulse and the ability to resolve this pulse allows the car to effectively distinguish between objects that are positioned on the same vector with respect to the car, and that are spatially close, such as a pedestrian standing near a car. Detector bandwidth determines the minimum width (in the time domain) of a resolvable pulse, which corresponds to the physical length of a collection of photons in the spatial domain. A long light pulse of 10ns (which would equate to 100 MHz) is 3 m long and could reflect off a pedestrian and also a vehicle 1m away from the pedestrian; a light pulse of 1ns (which would equate to 1000 MHz) is 30 cm long and would have separate reflections off the pedestrian and vehicle generating much more of an accurate read-out of obstacles in the vicinity. In short, having a bandwidth of 1000 MHz allows the system to distinguish between objects/people that are spatially close and on the same vector and to react accordingly to achieve road safety goals. A clock bandwidth of 100 MHz is lower than many common operating bandwidths; the clock in a processor that would control even a trivial LIDAR system could be expected to run faster than 100 MHz. Furthermore, a receiver analog bandwidth of 100 MHz is lower than a common detector and amplifier could be expected to have (and much slower than many currently

available components). If the proposed control is intended to address "incoming" or detector bandwidth, it would likely capture many standard commercially available LIDAR systems that are intended and designed for civil automotive self-driving car applications.

In addition to the bandwidth considerations noted above, we also put forth that the trigger point of 128 elements is too restrictive from a safety perspective for civilian self-driving car applications. Specifically, such cars need a LIDAR system to detect with accuracy foreign objects and debris ("FOD") on the road. The typical range of angle of slope on a road is +/-8 deg. The car needs to be a certain distance away from the FOD in order to react to it safely (150 m), and a typical dangerous FOD is 15 cm tall. This means that the sensor requires on the order of 250 detectors to cover the complete field of view with enough resolution to maintain safety.

Driver-assistance cars do not need this same level of FOD detection mainly because a driver would be able to step in and react whereas in a self-driving car, the system itself needs to react. As such, this parameter, as currently worded, would actually discourage safety for civilian self-driving cars.

Foreign availability: we note that many foreign manufacturers have developed technology in this space. Specifically, Reigl, an Austrian company, Sick AG, a German company and Hokuyo LTD, a Japanese company have all developed LIDAR systems that operate at over 100 MHz. The companies FirstSensor, Hamamatsu and SensL also develop similar systems for commercial applications.

Recommendation: We request that the same Civil Automotive Exception (with the amendment of extending the range to 400 m) that appears in the Note to paragraph (b)(6) be included in (b)(8) to avoid capturing commercial LIDAR systems that are designed and intended for use in civil automotive applications.

If the intention is to capture "incoming" or detector bandwidth, we recommend that the limit be increased to 1000 MHz which would cover a standard LIDAR system designed for civil automotive applications. We also recommend that the element trigger be "greater than 256 elements." Both of these changes would serve to encourage companies working in this space to continue to work on critical safety features.

> ***Cat. XII(b)(13) Laser stacked arrays as follows: (ii) Having an output wavelength exceeding 1,400 nm but less than 1,900 nm and a peak pulsed power density greater than 700 W/cm^2***

This control would potentially capture Laser stacked arrays that are intended to be incorporated into commercial LIDAR systems since the wavelength range 1400-1900 nm is being used for commercial applications.

Recommendation: We request that the same Civil Automotive Exception (with the amendment of extending the range to 400 m) that appears in the Note to paragraph (b)(6) be included in (b)(13)(ii) to avoid capturing commercial LIDAR systems that are intended for use in civil automotive applications.

> ***Cat. XII(c)(2) Photon detector, microbolometer detector, or multispectral detector infrared focal plane arrays (IRFPAs) having a peak response within the wavelength range exceeding 900 nm but not exceeding 30,000 nm and not integrated into a permanent encapsulated sensor assembly, and detector elements therefor;***

Due to the extremely wide range of wavelength parameter, this sweeping control would potentially capture IRFPAs that are intended by design and function for use in commercial LIDAR systems used in self-driving cars. Such IRFPAs, including highly sophisticated arrays, are currently under the jurisdiction of the Commerce Department so this proposed control would have the effect of placing commercially world-wide available EAR-controlled IRFPAs under ITAR jurisdiction. This would not only have devastating effects on US businesses, but it will also serve to bolster foreign competitors' efforts in this space. Indeed, many companies may elect to move operations abroad and source commercially available non-US components to avoid the hugely negative impact of these controls.

With respect to the term "focal plane array" itself, it is unclear whether detector elements that are purchased separately on multiple chips but are ultimately put together on a plane would actually qualify as a "focal plane array."

Additionally, linear arrays (single line of detectors) can only form images when coupled to a scanning system, which makes them very inefficient for night vision applications, but are necessary to form the 360 degrees field of view that self-driving vehicles require.

Foreign availability: Many non-US companies have IRFPAs that would be caught by this control. For example, Hamamatsu, a Japanese company, has an array in the range of 900-1600 nm that would be caught.

Recommendation: Include an exception/carve out for IRFPAs that are specially designed and intended for use in LIDAR systems used in civil automotive applications and having a peak response within the wavelength range not exceeding 1800 nm. Also, we recommend amending the definition of an IRFPA to include the monolithic nature of it (and exclude arrays formed of multiple dies assembled together in a system) as well as exclude linear arrays.

> ***Note 1 to paragraph (c): A permanent encapsulated sensor assembly (e.g., sealed enclosure, vacuum package) prevents direct access to the IRFPA, disassembly of the***

sensor assembly, and removal of the IRFPA without destruction or damage to the IRFPA.

§ 772.1 Definitions of terms as used in the Export Administration Regulations (EAR). Permanent encapsulated sensor assembly. (Cat 6) A permanent encapsulated sensor assembly (e.g. sealed enclosure, vacuum package) containing an infra-red focal plane array (IRFPA) that prevents direct access to the IRFPA, disassembly of the sensor assembly, and removal of the IRFPA without destruction or damage to the IRFPA.

To our knowledge, the term "permanent encapsulated sensor assembly" is not an industry-wide used term. As such, using this term will inevitably lead to confusion as well as inconsistency in how it is applied when interpreting the related controls. Even with the definition provided in Note 1 to paragraph(c) as well as in sec. 772.1 of the EAR, it is hard to apply since the requirements of the definition in their strictest sense cannot be met. Specifically, as far as we are aware, many focal plane arrays that are in some sort of encapsulation can still be disassembled without damaging or destroying the IRFPA. However, this can generally only be done by specialized tools by someone who has detailed awareness of the design of the IRFPA. Is the term "permanent encapsulated sensor assembly" intended to capture closed and non-serviceable encapsulated systems that could be disassembled by a specialized technician using specialized tools without damaging or destroying the IRFPA or is it only intended to capture closed and non-serviceable encapsulated systems that cannot be disassembled without damaging or destroying the IRFPA? If the latter, it is unclear to us whether any assembly would actually meet that criteria.

Recommendation: If the technical data is already controlled and one would need the design technology in order to be able to disassemble the assembly without damaging or destroying the IRFPA, it makes sense to modify this note as well as the definition set forth in sec. 772.1 of the EAR to read as follows: "*A permanent encapsulated sensor assembly (e.g., sealed enclosure, vacuum package) is designed as a closed and non-serviceable system intended to prevent direct access to the IRFPA, disassembly of the sensor assembly, and removal of the IRFPA.*"

Note 1 to paragraph (f): Technical data and defense services directly related to image intensifier tubes and specially designed parts and components therefor controlled in paragraph (c)(1) of this category, infrared focal plane arrays (IRFPAs) and detector elements therefor controlled in paragraph (c)(2) of this category, integrated IRFPA dewar cooler assemblies (IDCAs) controlled in paragraph (c)(9) of this category, wafers incorporating IRFPA or ROIC structures controlled in paragraph (e)(3) of this category, and specially designed readout integrated circuits (ROICs) controlled in paragraphs (e)(4) and (5) of this category, remain subject to the ITAR even if the technical data or defense services could also apply to items subject to the EAR.

Note 1 to paragraph (f) has the potential to yield extremely unreasonable consequences. For example, if Manufacturer A is designing a focal plane array controlled under the EAR, the related design technology would be controlled under the EAR. If Manufacturer B takes that same technology though and designs an ITAR-controlled focal plane array, that design technology that was controlled under the EAR would now become controlled under the ITAR even though it may have nothing to do with the parameters triggering control of the focal plane array under the ITAR.

Recommendation: Both proposed Note 1 and Note 2 should be revised to make clear that technical data that is "directly related" to an ITAR-controlled item (covered by the mentioned controls in the Note) is limited to technology that is specific to the parameters that render the device controlled under the ITAR and would not include generic design technology for focal plane arrays that would be covered under the EAR.

The guidance provided in proposed Note 1 to paragraph (f) of USML Category XII indicates that technical data not "specially designed" for a defense article nonetheless is directly related to the defense article. Such an overly broad reach of "directly related" does not conform to the plain meaning of the term. If certain technical data apply equally to items subject to the EAR as to items subject to the ITAR, then the technical data necessarily, under the recently promulgated "specially designed" definition, are not "specially designed" for defense articles, and so should not be deemed "directly related" to any defense article. "Directly related" should not be taken to mean merely "capable of use with" since that would not only run contrary to the plain meaning of the term, but it would also defeat the definition of "specially designed. Both the State and Commerce Departments explicitly repudiated the "capable of" standard in their definition of "specially designed." That over-reaching standard should not be embedded in "directly related."

Furthermore a definition of "directly related" is needed in order to clarify the export control status of myriad technical data used in or with both defense articles and items subject to the EAR as well as with respect to software. A definition of "directly related" should be promulgated that adheres closely to the natural meaning of the words, *i.e.*, "required and peculiarly responsible for the controlled features" of the associated item. Both "required" and "peculiarly responsible" have commonly understood definitions among the exporting public and those commonly-understood definitions should apply in this context. Alternatively, those terms could be assigned meanings similar to those currently being proposed by both the Commerce Department and State Department in their proposed rules (June 3, 2015) revising certain key definitions within the EAR and the ITAR.

> ***§ 742.6 Regional stability. (a) * * * (8) Special worldwide RS license requirement for specified items controlled in Category 0 or 6. A license is required to export or reexport the following items to all destinations, including Canada: (i) ''Technology'' controlled under ECCN 0E987; (ii) All commodities controlled under ECCNs 6A002; (iii) All***

commodities controlled under ECCN 6A990; (iv) ''Software'' controlled under ECCN 6D002 for the ''use'' of commodities controlled under 6A002.b; (v) ''Software'' controlled under ECCN 6D003.c; (vi) ''Software'' controlled under ECCN 6D991 for the ''development,'' ''production,'' or ''use'' of commodities controlled under ECCNs 6A002, 6A003, or 6A990; (vii) ''Software'' controlled under ECCN 6D994; (viii) ''Technology'' controlled under ECCN 6E001 for the ''development'' of commodities controlled under 6A002 or 6A003; (ix) ''Technology'' controlled under ECCN 6E002 for the ''production'' of commodities controlled under 6A002 or 6A003; (x) ''Technology'' controlled under 6E990; and (xi) ''Technology'' controlled under ECCN 6E994.

This proposed regional stability reason for control imposes a worldwide licensing requirement for items classified under several ECCNs. Not only is this type of global control unprecedented under the EAR, but, in addition, it is being imposed on several items that were previously classified as EAR99 (e.g., those items covered under newly created ECCNs 6D994 and 6E994 as well as the additional items that will now be caught under the proposed re-wording of ECCN 6A990 which would expand its scope to include ROICs for *all focal plane arrays* controlled under 6A002a.3). In short, this means that items that previously required no license at all (except for export to the embargoed countries) will now require an export license to be shipped everywhere including Canada. Needless to say, this will result in a huge burden on industry as well as the Commerce Department, which will have to process both additional export/reexport and deemed export/deemed reexport license applications for the covered items. Since projects involving this type of technology and source code have not been thus far subject to restrictive export controls, it is highly likely that non-US nationals have already been working on them and continue to work on them today. It is also fairly common for collaboration on projects to occur across offices and across countries. The proposed control would require limiting cross-country collaboration, restricting those who can work on the projects to US nationals and/or obtaining licenses for all non-US nationals working on the project. Applying for export and deemed export licenses would impose a large burden on both the Commerce Department and industry, as described earlier, and raises other issues caused by a shift in licensing policy, described further below. It will also inevitably affect the marketability of US parts and components as well as software and technology.

(b) Licensing policy.—(1) Licensing policy for RS Column 1 items or items subject to worldwide RS control…(iv) Applications for exports or reexports of software or technology described in paragraphs (a)(8)(i), (a)(8)(iv), (a)(8)(v), (a)(8)(vi), (a)(8)(viii), and (a)(8)(x) will be reviewed with a presumption of denial. There is also a presumption of denial for technology described in paragraph (a)(8)(ix), unless it is ''build-to-print technology'' that is required for integration, mounting, inspection, testing, or quality assurance (e.g., necessary to meet International Standards Organization (ISO) certification), which will be reviewed on a case-by-case basis.

Under the proposed licensing policy for items subject to the RS worldwide control, many items that are currently EAR99 (items controlled under the proposed rewording of 6A990) in addition to numerous other items controlled under 6A002, 6D003.c, and 6E001 that were eligible for various license exceptions would now be subject to a licensing policy of denial. This shift in licensing policy, creation of a worldwide licensing requirement, and removal of eligibility of certain license exceptions serve to pseudo-treat these items as ITAR-controlled even though these items are actually currently controlled under the EAR. This would serve to potentially severely impact US industry as companies seek alternative options that would not be tainted by US export licensing policies in this space. Similar long-lasting repercussions were seen in the space and satellite industry when those areas were subjected to ITAR control and foreign companies then looked to suppliers outside the US (with some foreign companies specifically desiring to go "ITAR free") to avoid subjecting their products and technologies to control under the ITAR. In our view, this would not fall within the spirit of export control reform.

> ***6D991 ''Software,'' n.e.s., ''specially designed'' for the ''development'', ''production'', or ''use'' of commodities controlled by 6A002, 6A003, 6A990, 6A991, 6A996, 6A997, or 6A998.***

The proposed revision to 6D991 results in controlling software that is currently controlled as EAR99 (e.g., software "specially designed" for the "development," "production," or "use" of all 6A002 and 6A003 items). Furthermore, the reason for control of RS would result in a license being required for all covered software to all countries and non-US nationalities in the case of deemed exports. Again, controlling this type of software would be fairly disruptive to industry since much of this software is currently non-controlled. Moving from a state of non-control to a state of highly-controlled will inevitably result in large impact from a licensing perspective as well as from a cross-nationality and cross-country collaboration perspective. Finally, such a control will help further non-US business interests working in this space whose software and technology are not subject to unilateral US export controls.

> ***6D994 ''Software'', n.e.s., ''specially designed'' for the maintenance, repair, or overhaul of commodities controlled by 6A002, 6A003, or 6A990.***
>
> ***6E994 ''Technology'' ''required'' for the maintenance, repair, or overhaul of commodities controlled under 6A002, 6A003, or 6A990.***

The proposed creation of ECCNs 6D994 and 6E994 would result in controlling low-level software and technology that is currently non-controlled (i.e., EAR99) and already developed abroad by various non-US focal plane array manufacturers. Furthermore, the reason for control of RS would result in a license being required for all covered software and technology to all countries and non-US nationalities (in the case of deemed exports). Thus, we would move from a regulatory environment of not requiring any export or deemed export licenses (except for the embargoed countries) to one where licenses would be required for all covered items regardless of

destination or nationality. Again, we believe this would create a significant burden on both US companies and BIS. Further, it would serve to ultimately hurt US businesses by having the secondary effect of encouraging the use of non-US manufacturers and developers so as to avoid the draconian implications that would result from using items that are subject to ITAR-like licensing requirements and policies.

Thank you once again for the opportunity to provide comments on these proposed rules.

Sincerely,

Ken Montgomery
Vice President, International Trade Regulation & Compliance

From: Susan Palmer <susan@cordin.com>
Sent: Wednesday, July 01, 2015 6:03 PM
To: PublicComments
Subject: Revisions of EAR RIN 0694-AF75

CORDIN

Cordin Company, Inc.
2230 South 3270 West
Salt Lake City, Utah 84119
USA

July 1, 2015

Department of Commerce
Bureau of Industry and Security
publiccomments@bis.doc.gov

Public comments on Revisions of the Export Administration Regulations (EAR)
RIN 0694-AF75

I have read your proposed revisions to the (EAR) and we at Cordin strenuously disagree with the changes that are being suggested.

Cordin Company manufactures High Speed Camera Systems and is very affected by your suggestions that our equipment be included in the ITAR. Cordin has severe competition all over the world for an extremely small market for ultra high speed electro optical equipment. Cordin is one of the few remaining companies in the world that manufactures ultra high speed camera systems for research applications. The other companies that once flourished here have been put out of business by increasing government regulations to the point they were forced either out of business entirely or they moved to another country that has less stringent export regulations.

Sidney Nebeker the founder of Cordin Company began operations in 1958 and struggled for many years to make this a viable business opportunity. During the 1960's there were many companies in the USA that manufactured ultra high speed camera systems. Government regulations began increasing limiting the markets for these camera systems and Export Licensing was instituted and this finally eliminated all but two companies, Cordin Company and Beckman Whitley. The regulations increased and the market share decreased until Beckman Whitley was forced out of business in 1968 and Cordin bought that company for a very small amount of money. Sidney Nebeker struggled through the years to keep Cordin operating, when the US market would become very limited we relied on a very few foreign sales to keep the company operating. Many times Mr. Nebeker would mortage his home and posessions to pay the salaries of his employees to keep the company in operation. Sidney Nebeker the founder of Cordin expired on December 2, 2014. There is no longer a passionate owner who is willing to incur high debt to keep Cordin operating.

Cordin is still struggling to stay in business and we have many companies and government laboratories that use our equipment and depend on our equipment. Customers are purchasing new cameras from us but many depend on us to support the equipment they already have. The cameras are definitely dual use and Lawrence Livermore National Labs, Sandia National Labs, Los Alamos National Labs (DOE research labs), Eglin AFB, NAWC, NSWC and ARL (DOD research labs) to name a few depend on our systems for research related to national security issues. However, we also sell camera to commerical companies and universities for commerical and medical applications. The cameras are used to help find cures for cancer, material testing, fluid studies, combustion studies, earthquake research, aeronatical reseach and much more.

We had two competitors in the last few years that are not located in the USA. One is Specialized Imaging in the United Kingdom and Cooke Company in Canada. Specialized Imaging is now growing and has doubled the number of employees in the last five years. They can sell to many of the customers all over the world that we are not able to sell to. Cordin is now decreasing in size, we now have half the number of employees we had three years ago. Cordin is definely a very small business, and becoming smaller under the very restrictive current EAR regulations. If these are increased and changed to the proposed ITAR regulations Cordin will likely cease to exist. Cooke Company has ceased to participate in the high speed market and makes other types of camera systems. There are many other new companies located outside of the US that have jointed the high speed camera market and sell ultra high speed gated intensified CCD camera worldwide.

We are having problems competing with companies that can sell to any country in the world. Please decrease the amount of paperwork and regulations that we have to comply with and not increase our work load. Allow us more freedom to sell our camera systems in competition with our competitors outside of the USA. Our cameras are used for research, they are not weapons. You need to control the entities who want to make weapons, not try to control the research equipment that is available easily worldwide. The only thing these new regulations will do is restrict Cordin Company to the point of its demise.

Cordin is the only company in the USA that sells ultra high speed camera systems. All others have been put out of business by competition outside of the USA and the restrictive licensing regulations.

Susan Palmer, Sales Manager
Cordin Company, Inc.

801 972-5272 ex 213
susan@cordin.com

From: Susan Palmer <susan@cordin.com>
Sent: Monday, July 06, 2015 4:58 PM
To: PublicComments; DDTCPublicComments@state.gov
Subject: ITAR Amendment -Category XII
Attachments: Specialized Imaging Cameras.pdf; Cordin 131.pdf; Cordin 131-HD.pdf; Cordin 222-4G.pdf; Cordin 164.pdf; Cordin 580.pdf; Cordin 560.pdf

Cordin Company, Inc.
2230 South 3270 West
Salt Lake City, Utah 84119
USA

July 6, 2015

Department of Commerce

Bureau of Industry and Security

publiccomments@bis.doc.gov

RE: RIN 1400 AD 32 Public Comments on the Amendment to the International Traffic in Arms Regulations: Revision of the U.S. Munitions List Category XII.

Cordin has additional comments on how the ITAR proposed changes will negatively impact Cordin Company as business based in the USA.

Cordin Company has one strong competitor who sells in the US but systems are manufactured in the UK. This competitor is Specialized Imaging. They sell a SIM D intensified Gated CCD Camera very similar to our Cordin Model 222-4G gated intensified system and also a SIM X camera also a competitor. They also distribute Optronis image converter cameras in direct competition with the Cordin Model 164. The Specialized Imaging systems also compete with our Rotating Mirror Streak and framing cameras, Cordin Model 131 and Model 131-HD rotating mirror CCD streak cameras and Cordin Model 580 and Model 560 rotating mirror framing cameras. Specifications for these systems manufactured by Cordin and by Specialized imaging are included with this document.

As we mentioned before Cordin is shrinking in size and Specialized imaging located in the UK is growing. Specialized Imaging is not subject to the strict regulations already in force by the Commerce Department, nor will they be limited in the future by any of the proposed ITAR additional restrictions.

Cordin is directly affected by any changes in regulations relating to photocathode tubes, micro channel plate intensifiers that also contain photocathode tubes, focal plane arrays and optical components such as beam splitters and cooling devices or readout devices and software.

Some of the regulations will directly affect our Cordin systems now, but many of the others will affect us in the future. If this becomes law these components will be controlled and therefore a prohibiting problem for us in the future as our competitor will be allowed to use any of the controlled components without being regulated. These regulations will essentially not only cause us a problem in our current design but also by deciding what directions we will be allowed to pursue in the future. In a few years all the new technology you seek to control will no longer be cutting edge but it will still remain controlled by ITAR and we will have difficulty in using these items to improve our systems that must commercially sell in the US and outside of the US in order for us to compete with Specialized Imaging.

This is evidenced by the fact that the rotating mirror camera systems were designed in the 1940's and detailed schematics of these systems are widely available worldwide. Numerous books were published in Europe detailing how to design and build a rotating mirror camera system. Our rotating mirror camera system basic design has now been known to the world for over 70 years and still it is on control. Once an item becomes mired in the Export Licensing system it is never removed regardless of its availability by other vendors outside of the USA. This policy has resulted in the fact that only one US company (Cordin) has been able to survive to the present in the USA when there were multiple companies that manufactured here in the 1950's and 1960's before the Export Licensing was instituted.

Specific regulations are written vaguely to allow coverage of various categories of imagers and parts to allow flexibility in your control of these items. This makes it very difficult for Cordin to determine what parts can be incorporated into our systems in the future.

The regulation Category XII (2) (A) sections 1-5. These could include almost anything we use to design our camera systems or that our competitor uses to design and we must make a similar design to compete with them in the commercial and military markets.

The regulation proposed Note to paragraph (b) (14) Sections (1) and (2). This may not apply immediately to technology but again future designs may require that we use these components with the increased spectral ranges or sensitivity. This paragraph will cripple our ability to innovate our image converter Model 164 and intensified gated cameras Model 222-4G and could also affect our our rotating mirror camera designs.

The regulation proposed Note to paragraph (c) (2) Section 12. This again is likely not included in our current camera systems, but again if we cannot use these components or assemblies in the future we are not able to keep up with the competition that is no similarly limited.

The regulation proposed Category XI (a) (4) This section in total will limit any improvements to our camera systems in the future buy limiting spectral ranges, cooling devices. The Model 131-HD rotating mirror streak camera will be captured on the ITAR regulation list because we combine the information on 11 CCD's into one file. This regulation if instituted could, if interpreted strictly. put almost all of our existing camera systems on the ITAR program, if not now in the near future.

Again all the components that you are trying to regulate that are included in cameras that can be used in military operations are also of value in high speed streak and framing cameras. The high speed cameras we sell are already regulated as a dual use item, even this regulation is prohibiting as the out of the USA competition does not have this problem. Our cameras are used for research and are not of any value on a battlefield. If these cameras are caught in the ITAR regulations also we will be even more severely penalized to the point that we may not be able to continue our operation.

Susan Palmer, Sales Manager Cordin Company, Inc. 2230 South 3270 West, Salt Lake City, Utah 84119
susan@cordin.com 8801 972-5272 ex 213.

SIMX - Ultra High Speed Framing Camera

Overview

Using high resolution image intensifiers and no-compromise optical design, provides high quality ultra fast framing images.

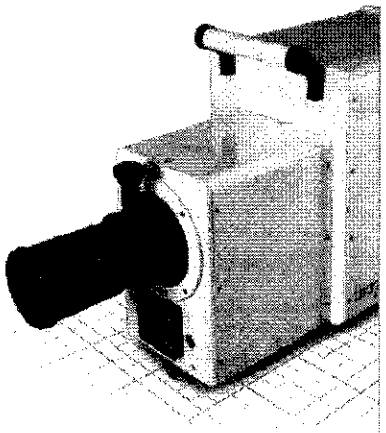

High quality images free from lag or ghosting.

50lp/mm dynamic resolution

MULTI-SPECTRAL IMAGERY

The Specialised Imaging Ultra Fast Framing Cameras offer the ultimate in ultra-high-speed imaging performance to scientists and engineers across all disciplines. The all-new custom optical design offers up to 16 images without compromising shading, or parallax. High resolution intensified CCD sensors controlled by state-of-the-art electronics provide almost infinite control over gain and exposure to allow researchers the flexibility to capture even the most difficult phenomena.

Full remote control using Ethernet is offered as standard, either the integral viewfinder or a laptop computer can be used for local focus. Comprehensive triggering facilities, highly accurate timing control, and a wide range of output signals, coupled with a custom software package that includes full measurement and image enhancement functions simplifies image capture.

All SIM cameras can be configured to give up to 16 different multi-spectral images with an R, G and B filter on each channel. In this configuration it is possible to take 10 colour images and 2 monochrome.

Applications

- Ballistics
- Combustion Research
- Failure Dynamics
- Elasticity, Crack Propagation and Shock resistance
- Medical Research and testing
- Detonics
- Impact Studies

Features

- NEW Multi-Spectral Imaging Functions
- Up to 16 discrete intensified optical channels
- Hybrid beamsplitter to overcome parallax and improve resolution
- Viewfinder focus
- Customisable spectral response
- 1360(H) x 1024(V) 12 bit images

Related Products

SIMD
VIEW SPEC

Latest News

Universal Image Intensifier Improves Low Light Performance of High Speed Camera / Video Systems

Specialised Imaging has introduced a new high speed relay lens to enable easy interfacing of its SIL2 range of image intensifiers to almost any high speed camera or video system.

The SIL2 family of gated image intensifier systems has been proven to improve the sensitivity, gating time, and spectral response of both high-speed video... **READ MORE**

Further Documentation

Product Brochures
Research Articles

Fill out a simple form and a PDF file will be sent to you via email.

SIMD - Ultra High Speed Framing Camera

Overview

Using high resolution image intensifiers and no-compromise optical design, provides high quality ultra fast framing images.

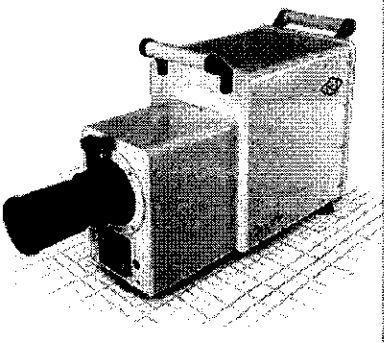

Double Pulse technique giving up to 32 images.

36lp/mm dynamic resolution

MULTI-SPECTRAL IMAGERY

The Specialised Imaging Ultra Fast Framing Cameras offer the ultimate in ultra-high-speed imaging performance to scientists and engineers across all disciplines. The all-new custom optical design offers up to 16 images without compromising shading, or parallax. High resolution intensified CCD sensors controlled by state-of-the-art electronics provide almost infinite control over gain and exposure to allow researchers the flexibility to capture even the most difficult phenomena.

Full remote control using Ethernet is offered as standard, either the integral viewfinder or a laptop computer can be used for local focus. Comprehensive triggering facilities, highly accurate timing control, and a wide range of output signals, coupled with a custom software package that includes full measurement and image enhancement functions simplifies image capture.

All SIM cameras can be configured to give up to 16 different multi-spectral images with an R, G and B filter on each channel. In this configuration it is possible to take 10 colour images and 2 monochrome.

Related Products

SIMX
VIEW SPEC

Latest News

Universal Image Intensifier Improves Low Light Performance of High Speed Camera / Video Systems

Specialised Imaging has introduced a new high speed relay lens to enable easy interfacing of its SIL2 range of image intensifiers to almost any high speed camera or video system.

The SIL2 family of gated image intensifier systems has been proven to improve the sensitivity, gating time, and spectral response of both high-speed video... **READ MORE**

Applications

- **Ballistics**
- **Combustion Research**
- **Failure Dynamics**
- **Elasticity, Crack Propagation and Shock resistance**
- **Medical Research and testing**
- **Detonics**
- **Impact Studies**
- **Spray and Particle Analysis**
- **Automotive testing**
- **Nanotechnology and micro-machines**

Features

- **NEW Multi-Spectral Imaging Functions**
- **Up to 16 discrete intensified optical channels**
- **Hybrid beamsplitter to overcome parallax and improve resolution**
- **Viewfinder focus**
- **Customisable spectral response**
- **1360(H) x 1024(V) 12 bit images**

Further Documentation

Product Brochures
Research Articles

Fill out a simple form and a PDF file will be sent to you via email.

Specialised Imaging

Specialised Imaging Inc.
41690 Enterprise Circle North,
Temecula CA 92590
United States

Tel +1 (1) 951 296 6406
Email info@specialised-imaging.com

Subscribe to our Newsletter

Full Name

Email Address

Telephone

Worldwide Service & Support

- **Request Product Documentation**
- **Hardware Upgrades**
- **Service & Repairs**
- **Technical Support**
- **Camera Rental**
- **Careers - Join the SI Team**
- **Meet us at an Event or Exhibition**

Copyright © Specialised Imaging Limited 2007 - 2015 | Website by Iguana

Optronis - Official Distributor

Optronis
Make time visible

Official Distributor

Model SC-10

SC-10 offers time resolution down to < 2 picoseconds. It has a large 8 mm photocathode and a 20 mm long streak length making it one of the largest format picosecond streak cameras available.

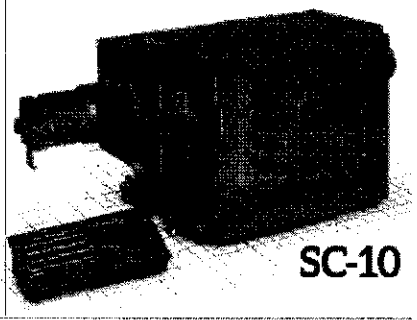

The SC-10 offer a modular design to allow both UV and Visible optics. Single Shot and Synchroscan sweep modules cover time windows from 200 psec. to 100 ms. making the widest range system on the market. An externally mounted fiber coupled MCP Intensifier and a variety of CCD readout cameras offer sensitivity and resolution to give single photoelectron sensitivity and high speed data transfer. Input optics are available to allow coupling to all spectrographs for time resolved spectroscopy, to VISAR systems and other optical setups including microscopes.

Model SC-20

The SC-20 Streak Camera offers time resolution down to < 200 picoseconds. It has a large 35 mm photocathode and 40 mm streak lengths making it the largest format streak cameras available.

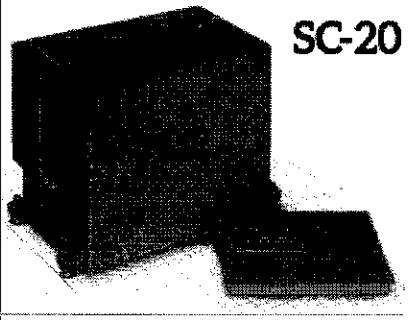

SC-20 offers a modular design to allow for UV or Visible inputs, both fiber optic and lens coupling, Single Shot sweep modules cover time windows from 100 nsec. to 100 ms. making it the widest range system on the market. An externally fiber optic coupled MCP Intensifier and a variety of CCD readout cameras offer resolution and sensitivity to give single photoelectron sensitivity and high speed data transfer. Input optics are available to allow coupling to most spectrographs for time resolution spectroscopy, to VISAR systems and other optical setups including microscopes.

Versatility

We offer several variants of the above camera systems to include X-ray, UV, VIS and NIR applications.

Both the SC-10 and SC-20 offer very high spatial resolution for multi line recording from Spectrographs, Line VISAR and other spatial resolution applications. SLR lenses can be mounted directly to the input optics for imaging events at long distances. Fiber Optic Coupled Time Markers allow for insertion of optical pulses to be

superimposed on to the streak to allow post processing and calibration of the data. All cameras offer electro mechanical shutters to protect the photocathodes.

All systems offer photocathode gating to eliminate pre and post event light to improve signal to noise in your data. We offer the Highest resolution Readout Systems with up to 4K x 4K pixels at up to 16 bits dynamic range, and fiber coupling for maximum sensitivity. We offer Optically coupled CCD Readout System with up to 150 fps data transfer.

Specialised Imaging

Specialised Imaging Inc.
41690 Enterprise Circle North,
Temecula CA 92590
United States

Tel **+1 (1) 951 296 6406**
Email **info@specialised-imaging.com**

Subscribe to our Newsletter

Full Name

Email Address

Telephone

Worldwide Service & Support

- **Request Product Documentation**
- **Hardware Upgrades**
- **Service & Repairs**
- **Technical Support**
- **Camera Rental**
- **Careers - Join the SI Team**
- **Meet us at an Event or Exhibition**

UNITED STATES
Choose your country

OUR CHANNEL
Click here to subscribe

Copyright © Specialised Imaging Limited 2007 - 2015 | Website by Iguana

CORDIN
SCIENTIFIC IMAGING

HIGH SPEED ROTATING MIRROR STREAK CAMERA

Model 131

- **Very high spatial resolution,** 3,250 pixels
- **Fast temporal resolution,** down to 1.4 ns
- **Software control** of exposure and timing parameters
- **Laser and pulsed flash illumination synchronization**
- **Long record length,** up to 28,300 pixels
- **Re-triggerable within seconds**
- **14 bit image depth**
- **Programmable time delay functions**
- **Captures external electronic fiducial inputs** on common time base
- **Electronic shuttering** prevents image overwrite

The Cordin Model 131 rotating mirror streak camera is the ideal analytical tool for continuously measuring one dimension over time for a given event. The rotating mirror architecture provides long record length and very high resolution compared to other streak capture methods. Combining rotating mirror and CCD technology provides users with access to digital streak image information in seconds. This allows the researcher to record data ready for subject adjustment, analysis, or presentation. A unique opto-mechanical design provides a continuous digital streak record, without gaps, blemishes, and with negligible distortion. Image information is captured at very fast rates without a photon-electron conversion. This means dynamic range is very high and image noise is very low.

The Model 131 streak image is 3,250 pixels in the spatial axis, and 14,000 pixels along the temporal axis. Optional extended record configurations offer up to 28,300 pixels on the temporal axis.

The Model 131 has large pixels at 7.4 micron pitch. This allows for better dynamic range, as the saturation threshold of the pixels is relatively high. The Model 131 is offered with two alternative rotating mirror turbines: the standard 1209 turbine operates to 5,000 rps and the optional 1231 turbine operates to 7,500 rps. The turbines can reach 50% of full speed using compressed air or nitrogen. Helium is required to reach full speed.

The writing rate is determined by the speed of the rotating mirror, which is software controlled. At top speed, using the 1209 turbine the recording rate is 1,700 pixels per microsecond. The 1231 turbine at top speed yields a recording rate of 2,500 pixels per microsecond.

Two fiducial inputs are provided for precise image synchronization. Two programmable delayed outputs are also provided. An intuitive PC-based user interface allows for easy setup, acquisition, alignment, analysis and saving of data.

OPTIONS

Extended record length to 28,300 pixels
High speed turbine (Model 1231)
Optical fiducial mark generator
Custom objective optics
Custom slit configurations
Laser field of view alignment tool

Model 131

HIGH SPEED ROTATING MIRROR STREAK CAMERA

CORDIN

SCIENTIFIC IMAGING

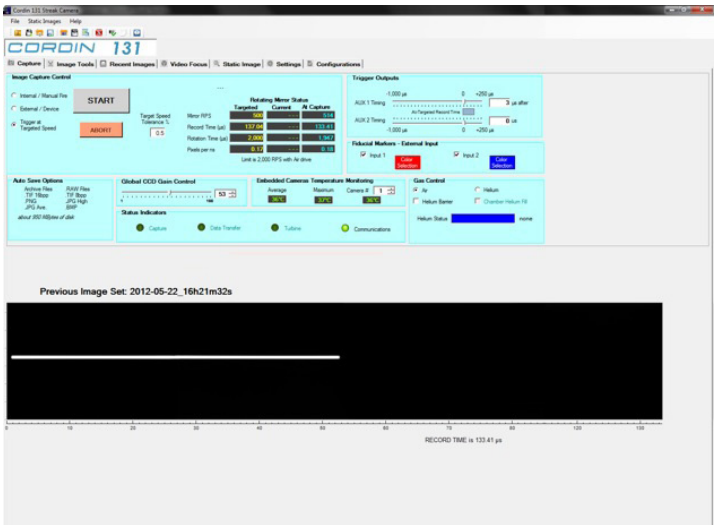

Screen shot of the Model 131 user interface

SPECIFICATIONS

Record Width	3,250 pixels
Record Length	14,300 pixels standard
Extended Track Length	28,300 optional
Minimum Temporal Feature	3.4 pixels at 25 micron slit width
ADC Dynamic Range	14 bit
Radius of Image Arc	
Subtended Angle of Arc	
Objective Lens	Nikon F-mount standard
	Other objective optics available
Pixel Size	7.4 x 7.4 microns
Device Type	29 MPixel full resolution progressive scan
	Black and white standard
Data Interface	Gigabit Ethernet

Trigger Inputs	+5V, +5V isolated, analog and optical with threshold
Fiducial Inputs	Two independent channels captured on common time base
Delay Outputs	Two programmable delay channels on common time base

Turbine	MODEL 1209	MODEL 1231
Max Mirror Rotation	5000 rps	7500 rps
Temporal Resolution	2.0 ns	1.4 ns
Maximum Writing Rate	1,700 pix/µs	2,500 pix/µs

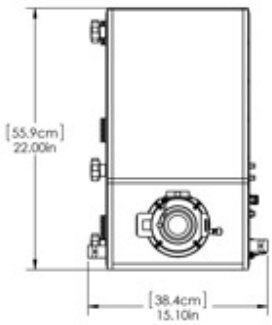

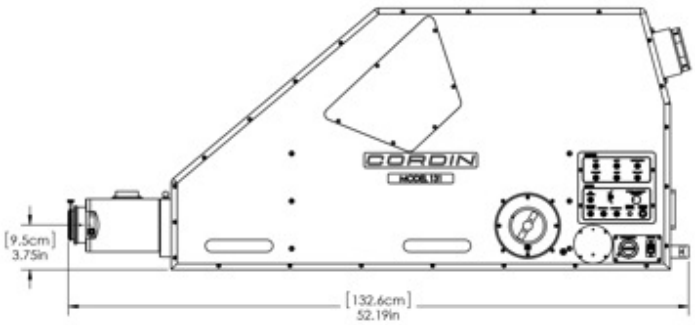

CORDIN
SCIENTIFIC IMAGING

HIGH SPEED ROTATING MIRROR STREAK CAMERA

Model 131-HD

- **Very high spatial resolution,** 6400 pixels
- **Fast temporal resolution,** down to 650 ps
- **Software control** of exposure and timing parameters
- **Laser and pulsed flash illumination synchronization**
- **Long record length,** up to 46,000 pixels
- **Re-triggerable within seconds**
- **14 bit image depth**
- **Programmable time delay functions**
- **Captures external electronic fiducial inputs** on common time base
- **Electronic shuttering** prevents image overwrite

The Cordin Model 131-HD camera is the ideal analytical tool for continuously measuring one dimension over time for a given event. The rotating mirror architecture provides long record length and recording rate flexibility. Combining rotating mirror and CCD technology provides users with access to digital streak image information in seconds. This allows the researcher to record data ready for subject adjustment, analysis, or presentation. A unique opto-mechanical design provides a continuous digital streak record, without gaps, blemishes, and with negligible distortion.

The Model 131-HD streak image is 6400 pixels in the spatial axis, and 17,000 pixels along the temporal axis. Optional extended record configurations offer up to 46,000 pixels on the temporal axis.

The Model 131-HD is offered with two alternative rotating mirror turbines: the standard 1209 turbine operates to 5,000 rps and the optional 1231 turbine operates to 7,500 rps. The turbines can reach 50% of full speed using compressed air or nitrogen. Helium is required to reach full speed.

The writing rate is determined by the speed of the rotating mirror, which is software controlled. At top speed, using the 1209 turbine the recording rate is 4,460 pixels per microsecond. The 1231 turbine at top speed yields a recording rate of 6,700 pixels per microsecond.

Two fiducial inputs are provided for precise image synchronization. Two programmable delayed outputs are also provided. An intuitive PC-based user interface allows for easy setup, acquisition, alignment, analysis and saving of data.

OPTIONS

Extended record length to 46,000 pixels
High speed turbine (Model 1231)
Optical fiducial mark generator
Custom objective optics
Custom slit configurations
Laser field of view alignment tool

Model 131-HD

HIGH SPEED ROTATING MIRROR STREAK CAMERA

CORDIN

SCIENTIFIC IMAGING

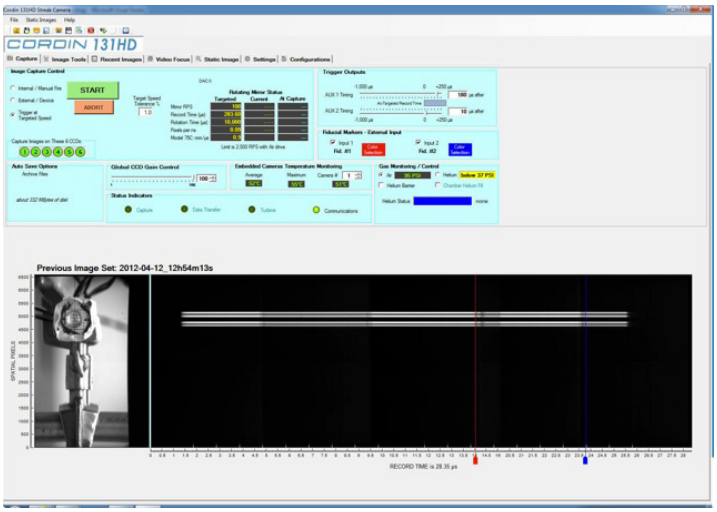

Screen shot of the Model 131-HD user interface

SPECIFICATIONS

Record Width	6400 pixels
Record Length	17,000 pixels standard
Extended Track Length	21,000, 34,000 or 46,000 pixels *optional*
Minimum Temporal Feature	4.5 pixels at 25 micron slit width
ADC Dynamic Range	14 bit
Radius of Image Arc	400 mm
Subtended Angle of Arc	13 degrees standard, 37 degrees maximum
Objective Lens	Nikon F-mount standard
	Other objective optics available
Pixel Size	5.5 x 5.5 microns
Device Type	29 MPixel full resolution progressive scan
	Black and white standard

Data Interface	Gigabit Ethernet
Trigger Inputs	+5V, +5V isolated, analog and optical with threshold
Fiducial Inputs	Two independent channels captured on common time base
Delay Outputs	Two programmable delay channels on common time base

Turbine	MODEL 1209	MODEL 1231
Max Mirror Rotation	5000 rps	7500 rps
Temporal Resolution	1.0 ns	0.65 ns
Record Length		
17,000 Pixel Configuration	3.8 µsec	2.6 µsec
46,000 Pixel Configuration	10.2 µsec	7.0 µsec

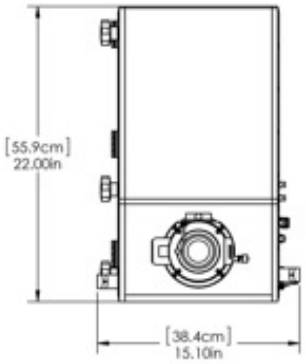

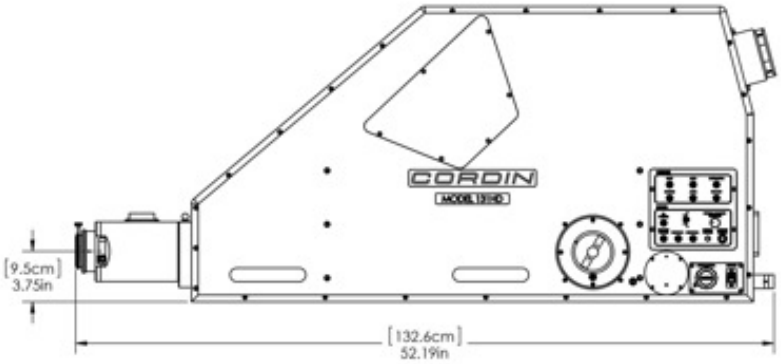

CORDIN
SCIENTIFIC IMAGING

HIGH SPEED GATED INTENSIFIED CCD CAMERA

Model 222-4G

- **Very high image quality**
- **High resolution CCD,** 2K x 2K pixels, 12 bit dynamic range
- **Extremely short exposure time,** down to 5 ns
- **Very high sensitivity,** enabling very short exposures in moderate light or microscope configurations
- **Very high framing rate,** minimum interframe times equivalent to 200 million frames per second
- **Independent control of gain,** exposure time and time delay for each channel
- **Display adjustment** sliding scale to view 8 bit subsamples of full 12 bit images on the fly

The **Cordin Model 222-4G** gated, intensified multi-channel CCD camera offers the best image quality of any multi-channel intensified camera available. It is a powerful and easy to use tool for studying events in the nanosecond to millisecond time domain. The camera system is based around a beam splitter optical system that distributes the image from a single objective lens to eight separate imaging channels without vignetting, parallax or ghosting. Each channel has an MCP device fiber-optically coupled to a 4MPixel CCD, and can capture two images per channel, for a total of 16 images captured by the system.
Time between exposures on adjacent channels can be as short as five nanoseconds. Time between exposures on a single channel can be as short as one microsecond.
Operation of the camera is controlled via USB 2.0 with user-friendly software that allows the user to set timing, sequence, gain and triggering. 12 bit images can be saved as TIFF or RAW files, and any 8 bit subsampled image can be saved as BMP or JPG files. Camera settings can also be saved and reloaded later to duplicate a set-up.
The 222-4G is a thoroughly new design, building on Cordin's 15 years of experience in this technology.

OPTIONS

Microscope integration

Tele-focus macro objective lens

Alternate photocathode materials for choice of wavelength range sensitivity

UV configuration

Available with fewer channels at a lower cost, with option of adding channels later as an upgrade

©2012 Cordin Company 2230 South 3270 West, Salt Lake City, Utah 84110 USA 801-972-5272

Model 222-4G

HIGH SPEED GATED INTENSIFIED CCD CAMERA

CORDIN

SCIENTIFIC IMAGING

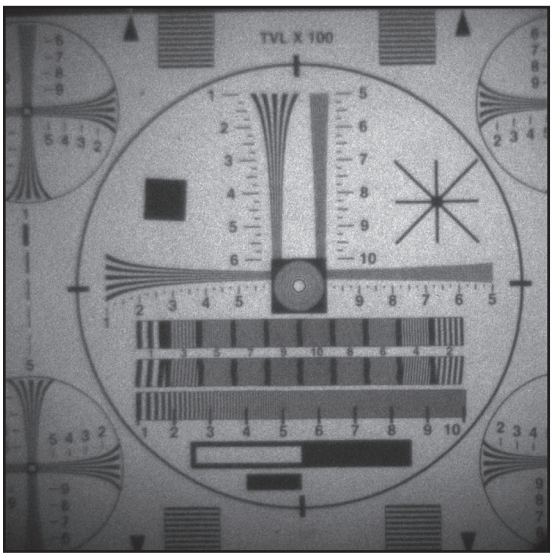

Raw Image of Resolution Chart at 5ns exposure

SPECIFICATIONS

CCD

Pixels	2048 x 2048
Device Type	Full resolution progressive scan
Dynamic Range	12 bit

INTENSIFIER

Device	18 mm Ø MCP
Photocathode	Super S25
Gain	10,000 watts/watt
Shutter Ratio	107:1
Grey Scale	42 dB to 48 dB
Resolution	40 lp/mm

OPTICS

Number of Images	16 images on 8 channels
Objective Lens	Nikon F mount
Beam Splitter	Pellicle mirror system

TRIGGERING AND INTERFACE

Interframe Times	5 ns to 10 ms in 5 ns steps with independent control of each frame
Exposure Times	5 ns to 1 ms in 5 ns steps
System Response	65 ns maximum
Jitter	±3 ns
Input Triggers	Logic Level, direct and isolated; Analog and Optical with threshold
Outputs	Monitor, two programmable LVDS outputs on common time base with images
Interface	USB 2.0

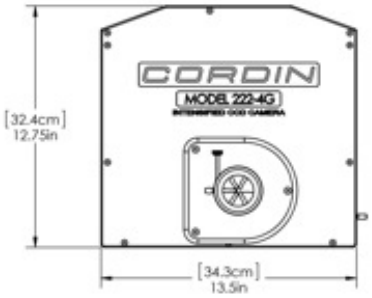

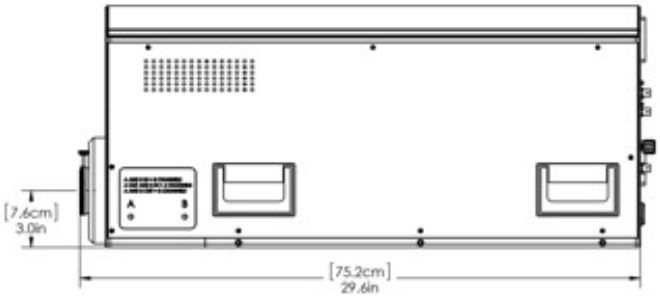

CORDIN
SCIENTIFIC IMAGING

IMAGE CONVERTER STREAK CAMERA

Model 164

- **Wide photocathode,** 18mm x 4mm
- **High spatial resolution,** 30 lp/mm
- **High temporal resolution,** 50 picoseconds
- **Very low noise,** 10^{-8} Cd/m^2
- **High resolution readout,** 12 bit, 4 megapixel CCD

Streak cameras record a thin, wide line of light signals at the fastest possible speeds. They capture subtle variations in intensity from a line image, a spread spectrum, or linear array of discrete signals with resolution down into the picoseconds.

The **Cordin Model 164** streak camera is the evolution of Cordin's more than 20 years of experience in streak camera design and manufacturing. It uses a streak tube with a large photocathode and high spatial resolution to give a broad range of data capture capability. It has an integrated, high resolution, high dynamic range CCD readout that ensures all information is captured in both detail and gray scale.

The 164 comes standard with a photocathode offering spectral sensitivity from 350nm to 1100nm. Sensitivity ranges covering from 115nm to 1550nm are available.

The entrance slit is a user adjustable mechanical slit, so that resolution versus input energy can always be optimized. The input optics have an easily accessible telecentric region for drop-in filters.

The camera is controlled via a standard USB interface and a Windows PC. The host software allows for control of all camera functions, triggering and delays, image acquisition, display, and basic image analysis.

OPTIONS

Nikon lens mount for imaging

Spectrograph coupling for time resolved spectroscopy

Multi-channel fiber optic linear array input for optical signal analysis

Alternate photocathode materials for choice of wavelength range sensitivity

UV configuration

CORDIN
SCIENTIFIC IMAGING

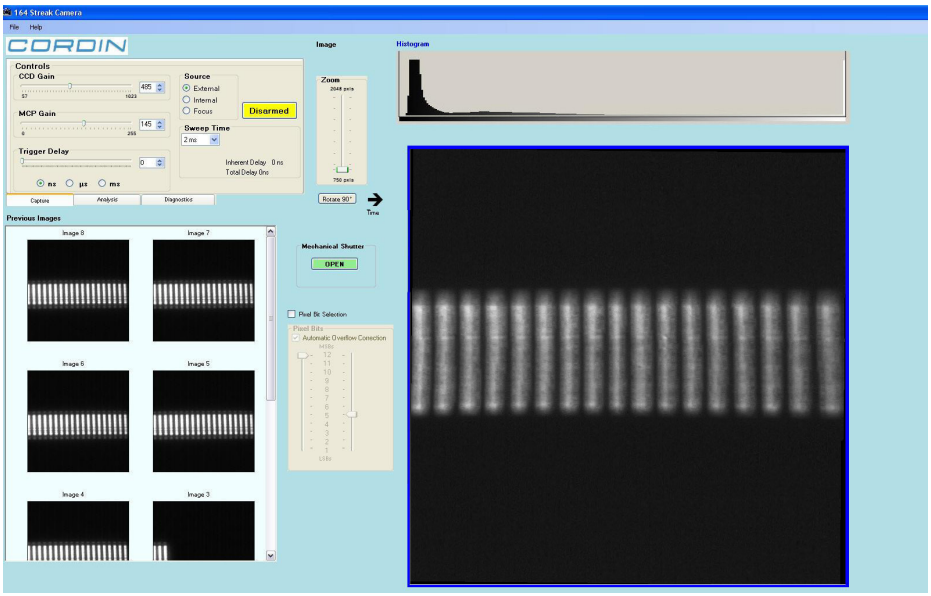

Screen shot of the Model 164 user interface

SPECIFICATIONS

STREAK

Temporal Resolution	50 picoseconds
Spatial Resolution	30 line pair/mm
Spectral Response	350-1100 nm standard
	115-1550 nm optional
Photocathode	18 mm x 4 mm
Sweep Nonlinearity	less than 10%

INTENSIFIER

Device	25 mm Ø MCP
Photocathode	Super S25
Gain	10,000 watts/watt
Shutter Ratio	107:1
Grey Scale	42 dB to 48 dB

CCD READOUT

Pixels	2000 x 2000
Device Type	Full resolution progressive scan
Dynamic Range	12 bit

TRIGGERING AND INTERFACE

Response Time	less than 35 nanoseconds
Jitter	less than 50 picoseconds
Trigger Input	+5V
Interface	USB 2.0 to Windows 7 host

GENERAL

Power Input	110-250VAC 50-60 Hz
Weight	14 kg (32 lbs)

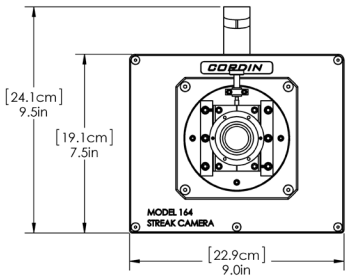

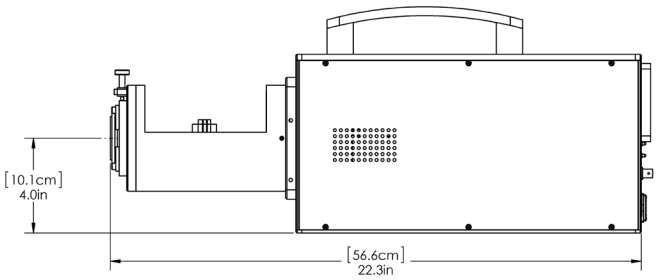

CORDIN
SCIENTIFIC IMAGING

HIGH SPEED ROTATING MIRROR CCD CAMERA

Model 580

- **Very high resolution:** 8 megapixel, (3.2K x 2.4k) at all capture speeds
- **High dynamic range:** 14 bit ADC
- **Very high framing rate:** 4 million fps
- **Very high image quality**
- **Software control:** easy control of exposure and timing parameters for each channel through user-friendly software
- **Image alignment software:** post processing software for precise alignment of images for animation and analysis
- **Laser and pulsed flash illumination synchronization**
- **Built-in time delay functions**

The Cordin Model 580 high-speed rotating mirror CCD camera achieves the highest combination of speed and resolution of any imaging technology available. The Cordin 580 captures images in a burst mode at frame rates of 4 million frames per second and at 8 mega-pixel resolution. The system uses a rotating mirror optical system, which does not require reading out sub-arrays of the image to achieve higher framing rates. It also allows for much higher frame counts and no image degradation relative to MCP based high speed camera systems, and enables color imaging.
The ADC dynamic range for this camera system is a 14 bits and images are captured at full frame size 3.2K x 2.4K at all speed ranges. The camera is available in a 20, 40 or 78 frame configuration. Frames can be either black and white or color. Systems purchased with fewer frames can be upgraded to more frames at a later date.
The Model 580 camera can be triggered by the event being photographed, and can accept triggers in advance or for some time after the event of interest. It can also provide the trigger to initiate the event.
The standard high speed mirror-drive is driven by compressed air or nitrogen at lower to medium speeds, and with helium at higher speeds. The camera can also be configured with a brushless electric driven mirror operating at slower speeds, for more convenient operation when high framing rates are not required.
The system comes complete with a computer and control software. Post processing image alignment software that provides precise alignment of images for animation and analysis is also included. Data may be saved in a wide variety of 8 bit file formats. Full 14 bit images are saved in 16 bit tiff file format.

OPTIONS

Customized front optics
Micro or Macro lens options
C- Mount Adapter
Cordin Enlarging ~5X lens
Illumination Sources Models 605, 607
Mobile camera stand

Model 580

HIGH SPEED ROTATING MIRROR CCD CAMERA

CORDIN

SCIENTIFIC IMAGING

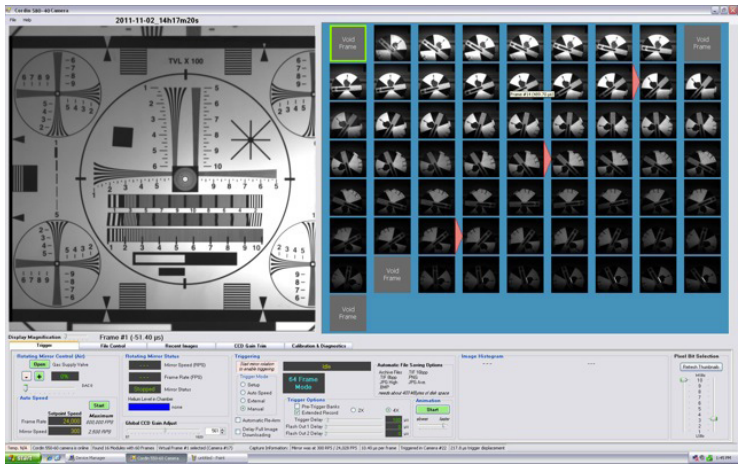

Screen shot of the Model 580 user interface

SPECIFICATIONS

Number of Frames	20, 40 or 78	**Pixel size**	5.5 x 5.5 µm
Maximum Framing Rate	4 million fps (78 frames)	**ADC Dynamic Range**	14 Bit
Front Optics	Single objective lens system (no parallax)	**Device Type**	Full resolution progressive scan Black and white standard Color optional
Objective Lens	Nikon F-mount		
Resolution	3.2K x 2.4K pixels, 1.6K x 2.4K pixels with binning	**Interface**	Gigabit Ethernet for camera control and image transfer

CONFIGURATIONS

Number of Frames	20	40	78
Gas Turbine Drive Configuration			
Maximum Framing Rate (fps)	1,000,000	2,000,000	4,000,000
Minimum Interframe time	1 µs	500 ns	250 ns
Minimum Exposure Time	220 ns	220 ns	220 ns
Electric Drive Configuration			
Maximum Framing Rate (fps)	150,000	300,000	600,000
Minimum Interframe time	6.6µs	3.3 µsec	1.7 µsec
Minimum Exposure Time	1.46 µs	1.46 µs	1.46µs

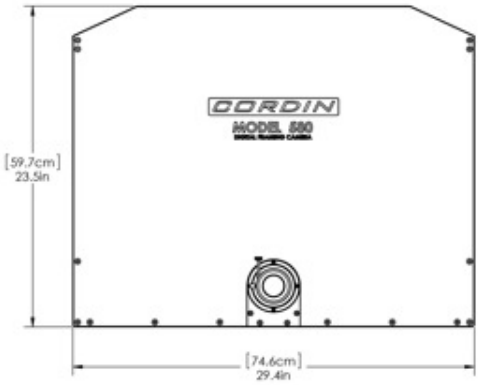

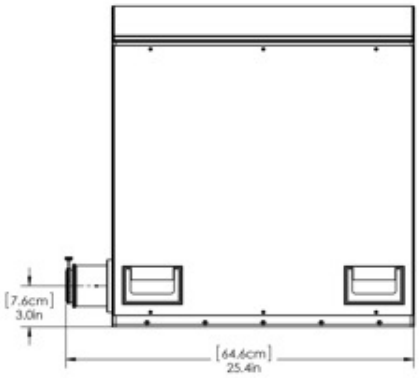

CORDIN
SCIENTIFIC IMAGING

HIGH SPEED ROTATING MIRROR CCD CAMERA

Model 560

- **High resolution:** 2 megapixel, (1920 x 1080) at all capture speeds
- **High dynamic range:** 14 bit ADC
- **Very high framing rate:** 4 million fps
- **Very high image quality**
- **Software control:** easy control of exposure and timing parameters for each channel through user-friendly software
- **Image alignment software:** post processing software for precise alignment of images for animation and analysis
- **Laser and pulsed flash illumination synchronization**
- **Built-in time delay functions**

The Cordin Model 560 high-speed rotating mirror CCD camera offers high resolution at extremely high framing rates, and at a moderate cost. The Cordin 560 captures images in a burst mode at frame rates of 4 million frames per second and at 2 mega-pixel resolution. The system uses a rotating mirror optical system, which does not require reading out sub-arrays of the image to achieve higher framing rates. It also allows for much higher frame counts and no image degradation relative to MCP based high speed camera systems, and enables color imaging.
The ADC dynamic range for this camera system is a 14 bits and images are captured at full frame size 3.2K x 2.4K at all speed ranges. The camera is available in a 20, 40 or 78 frame configuration. Frames can be either black and white or color. Systems purchased with fewer frames can be upgraded to more frames at a later date.
The Model 560 camera can be triggered by the event being photographed, and can accept triggers in advance or for some time after the event of interest. It can also provide the trigger to initiate the event.
The standard high speed mirror-drive is driven by compressed air or nitrogen at lower to medium speeds, and with helium at higher speeds. The camera can also be configured with a brushless electric driven mirror operating at slower speeds, for more convenient operation when high framing rates are not required.
The system comes complete with a computer and control software. Post processing image alignment software that provides precise alignment of images for animation and analysis is also included. Data may be saved in a wide variety of 8 bit file formats. Full 14 bit images are saved in 16 bit tiff file format.

OPTIONS

Customized front optics
Micro or Macro lens options
C- Mount Adapter
Cordin Enlarging ~5X lens
Illumination Sources Models 605, 607
Mobile camera stand

Model 560

HIGH SPEED ROTATING MIRROR CCD CAMERA

CORDIN

SCIENTIFIC IMAGING

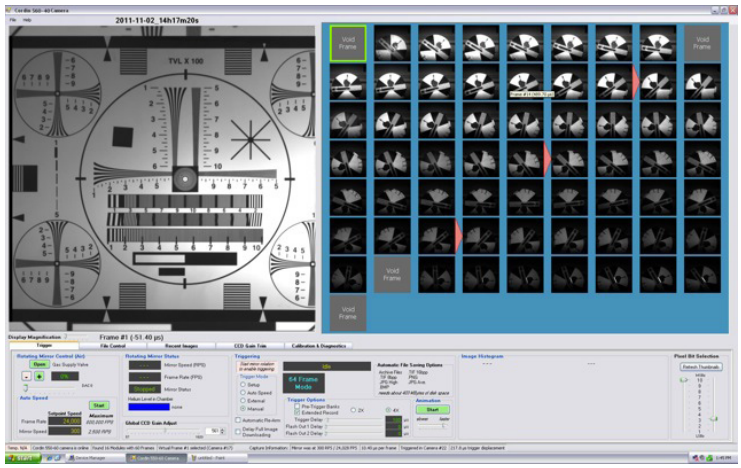

Screen shot of the Model 560 user interface

SPECIFICATIONS

Number of Frames	20, 40 or 78
Maximum Framing Rate	4 million fps (78 frames)
Front Optics	Single objective lens system (no parallax)
Objective Lens	Nikon F-mount
Resolution	1920 x 1080 pixels
Pixel size	7.4 x 7.4 µm
ADC Dynamic Range	14 Bit
Device Type	Full resolution progressive scan Black and white standard Color optional
Interface	Gigabit Ethernet for camera control and image transfer

CONFIGURATIONS

Number of Frames	20	40	78
Gas Turbine Drive Configuration			
Maximum Framing Rate (fps)	1,000,000	2,000,000	4,000,000
Minimum Interframe time	1 µs	500 ns	250 ns
Minimum Exposure Time	220 ns	220 ns	220 ns
Electric Drive Configuration			
Maximum Framing Rate (fps)	150,000	300,000	600,000
Minimum Interframe time	6.6µs	3.3 µsec	1.7 µsec
Minimum Exposure Time	1.46 µs	1.46 µs	1.46µs

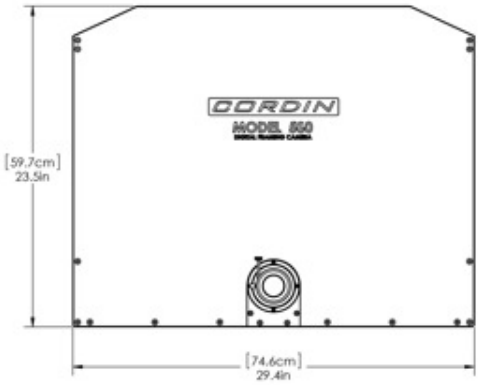

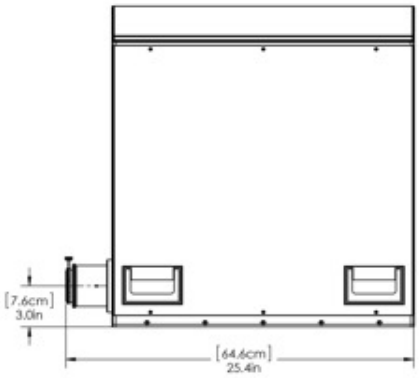

DRS Technologies, Inc.
Trade Compliance Office
2345 Crystal City Drive
10th Floor
Arlington, VA 22202

July 6, 2015

Mr. Dennis Krepp
Office of National Security and Technology Transfer Controls
Bureau of Industry and Security
U.S. Department of Commerce
Washington, DC 20230

Subject: Response to the Amendment to the Export Administration Regulations: Control of Fire Control, Range Finder, Optical, and Guidance and Control Equipment the President Determines No Longer Warrant Control Under the United States Munitions List – RIN 0694-AF75

Dear Mr. Krepp,

DRS Technologies, Inc. appreciates the opportunity to comment on proposed revisions to the EAR related to Fire Control, Range Finder, Optical and Guidance and Control Equipment. The rule proposes to significantly increase controls on many items that are widely available outside the United States, in countries that all control them lower than the U.S. even presently controls them. These items comprise a portion of the U.S. high-technology industrial base including infrared, night vision, lasers, optics, and gyro-stabilized gimbals. Given the detrimental effect on the commercial space industrial base when higher controls were applied to them despite foreign availability, we have significant concerns regarding the negative impact that such increased controls will have on these industries.

In the joint Department of Defense and State report to the Congress regarding their recommendation to return the export control of commercial satellites to the Department of Commerce (re. the 1248 report), the Departments stated that

> "*Applying more stringent export control policies and practices than are imposed by other advanced satellite-exporting countries places the U.S. satellite industry at a distinct, competitive disadvantage that undermines the U.S. space industrial base to the detriment of U.S. national security, while doing nothing to protect the technological advances that are critical to giving our war fighters the advantages that U.S. technology can afford them.*"

The lessons learned from this are not limited to controlling as military items that are available commercially from other nations. These lessons are also applicable to applying more stringent commercial export control policies and practices than are imposed by those foreign countries.

For example, the changes to ECCN 6A002 propose a world-wide licensing requirement for micro-bolometer focal plane arrays and that such arrays be permanently encapsulated to be subject to the EAR. There are nine (9) companies located in seven (7) countries that design and manufacture these items. All seven (7) countries control these items as commercial/dual-use for exports and have no such licensing requirements. Additionally, three (3) of the companies are located in China, which is not a Wassenaar member meaning they have even less commercial export restrictions than the other 40 Wassenaar member countries.

Similarly, US manufacturers of Read-Out-Integrated-Circuits (ROICs), currently controlled as EAR99 would be subject to a world-wide licensing requirement. Given the number of foreign countries with ROIC design and manufacturing capability, this self-imposed control will simply result in foreign countries bypassing the U.S. industrial base, negatively impacting our ability to compete in this established global market.

Despite the lessons learned cited in the 1248 report, this proposed rule has the potential of repeating this same mistake. By self-imposing significantly stricter export control policies and procedures, it will remove these segments of the U.S. industry from the global market, conceding this market to already established foreign companies, enabling them to grow unchallenged by any U.S. competition. Already strong, competitive companies such as Dali and Wuhan-Guide in China, Ulis and Sofradir in France, Selex in the UK, AIM, Rofin, and Jenoptik in Germany, Le Tehnika in Slovenia, Optec in Italy, SCD in Israel, Hamamatsu and NEC in Japan, Teledyne-Dalsa in Canada, and MikroSens in Turkey will continue to grow with the disappearance of U.S. industry from these well-established commercial markets.

We strongly urge a fundamental rewrite of this proposed rule to harmonize the export controls of these items with other countries that have the same commercial industrial base capability. It makes no sense for the United States to control these items at such a higher level when similar items manufactured overseas are not similarly controlled. U.S. companies must have the ability to compete on a level footing against this foreign competition.

Enabling the global competitiveness of U.S. companies will foster growth, investment in new technology, and strengthen the U.S. industrial base. That will help to ensure a continued stream of advanced technology remains available to our nation, enhancing national security. As evidenced in the commercial satellite field, controlling these items as this rule proposes will have the opposite effect by inhibiting U.S. industry in an already well-established and growing international field.

Should you have any questions in this matter or require additional information, please contact me at (703) 412-0288 or at ghill@drs.com.

Sincerely,

Gregory C. Hill
Vice President
Global Trade Compliance
DRS Technologies, Inc.

Attachement : List of Foreign Commercial Availabilty

Foreign Commercial Availability.

The below lists provide an illustration of the foreign commercial availability of items proposed for higher control. For example, 6A002 proposes a world-wide licensing requirement for micro-bolometer focal plane arrays and that such arrays be permanently encapsulated to be subject to the EAR. The non-US uncooled infrared detector manufacturers list contains the names of nine (9) companies located in seven (7) countries that design and manufacture these items. All seven (7) countries control these items as commercial/dual-use for exports and have no such licensing requirements. Additionally, three (3) of the companies are located in China, which is not a Wassenaar member meaning they have even less commercial export restrictions than the other 40 Wassenaar member countries.

The below lists are by no means complete. The foreign commercial availability is so widespread, there was insufficient time to compile it all. The purpose of these lists is to provide an example of the world-wide commercial availability of most of the items proposed for more stringent control in this proposed rule.

Additionally, we have attached a sampling of brochures of foreign available equivalent commercial items that are proposed for control here.

Non-US uncooled infrared detector manufacturers:

- Ulis, France, uncooled infrared focal plane arrays up through 1024x768, commercial.
- Semi-Conductor Devices (SCD), Israel, uncooled infrared focal plane arrays up through 640x480, commercial
- NEC Avio Infrared Technologies Co. Ltd., Japan, uncooled infrared focal plane arrays up through 640x480, incorporated into their own commercial IR camera cores and camera systems, commercial
- Wuhan-Guide, China, http://wuhan-guide.com uncooled infrared focal plane arrays up through 640x480, commercial (non-Wassenaar member)
- Zhejiang Dali Technology Co., China, www.ir-thermalimagingcamera.com, uncooled infrared focal plane arrays up through 640 x 480, commercial (non-Wassenaar member)
- Debut Optoelectric Sensor Co, Ltd, China, uncooled infrared focal plane arrays up through 640x480, commercial, (non-Wassenaar member)
- Fraunhofer IMS, Germany, www.ims.fraunhofer.de, uncooled infrared focal plane arrays up through 320x240, commercial
- MikroSens, Turkey, www.mikrosens.com.tr, uncooled focal plane arrays up through 160x120, commercial
- Teledyne-Dalsa, Canada, uncooled infrared focal plane arrays up through 640x480, commercial

Non-US cooled infrared detector manufacturers and products:

- Selex, UK, www.selex-es.com, cooled infrared focal plane arrays up through 1024x768, commercial
- Sofradir, France, www.sofradir.com, cooled infrared focal plane arrays up through 640x512
- Semi-Conductor Devices (SCD), Israel, www.scd.co.il, cooled infrared focal plane arrays up through 1920x1536 (10 micron, mid-wave InSb), commercial.
- Xenics, Belgium, 640 x 512 InGaAs SWIR FPAs, commercial (also designs its own ROICs)

Non-US Read Out Integrated Circuits (ROICs)

- Xenics, Belgium,
- sInfraRed, Singapore,
- Alcatel-Thales, France,
- New Imaging Technologies, France
- New Infrared Technologies, Spain,
- ChungHwa/Leading-Light (Taiwan),
- Semiconductor Devices (SCD – Israel),
- Mikro-Tasarım, Turkey

Non-US Cryogenic Coolers

- AIM, Germany
- Le Tehnika, Slovenia
- Ricor, Israel
- Thales, Netherlands

Infrared Optics

- Knight Optical, UK, www.knightoptical.com,
- BMV Optical, Canada, http://www.bmvoptical.com/
- Success Infrared, China http://www.optics-infrared.com/LenseUC.html
- Kunming Yunzhe High-Tech, Ltd, China, www.yzoptics.com/yzgxEnglish/index.html

Gimbals

Beijing Hamilton Technology Co., Ltd China, **hamilton**-tech.company.weiku.com,

- Gimbal with 320x256 cooled MCT (mid-wave) camera, stabilization ≤0.2mrad(RMS)

Yiwu TianYing Optical Instrument Company, China, http://www.nightvisioncn.com/,

- EOST-210 Airborne/UAV/Helicopter Thermal Imaging Camera System- 2 axis 40 micro radian stable accuracy,640x512 uncooled, 40mk NETD, auto tracking
- EOST2000M, Maritime search & rescue thermal imaging camera system, 4-axis gyro stability 10 micro radian stabile accuracy, 640x512 cooled, auto tracking

Infrared Hand Helds & Cores

- China, Pearmain 384x288, 50 Hz uncooled core, lead time 1 to 7 days. http://pearmain.manufacturer.globalsources.com/si/6008813092486/pdtl/Thermal-imaging/1025737934/Thermal-Camera-Module.htm

- China, Dali 384x288, 50 Hz uncooled core, lead time 2-4 weeks (200 units), http://www.ir-thermalimagingcamera.com/sale-2713265-8-14um-ip54-industrial-thermal-imaging-module-for-security-surveillance.html

- Taiwan, Allied Scientific Pro either a 640x480 or a 384x288, 60 Hz uncooled core, lead time 2 weeks (up to 1000 units) http://alliedscientificpro.com/shop/uncooled-lwir-infrared-sensor-8-to-14-microns/

JENOPTIK

VarioCAM® HD Thermographic Infrared Cameras

Precision Thermography with up to 2048 × 1536 IR Pixels Resolution

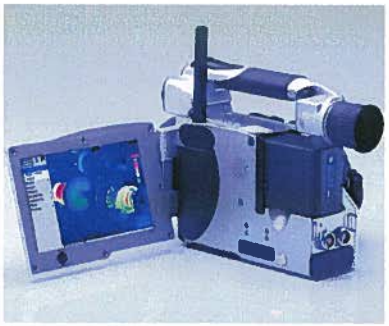

High Definition Infrared made in Germany: Thermographic precision you can rely on.

If demanding thermal imaging is your assignment, the new VarioCAM® HD uncooled thermographic cameras will be your first choice solution.

VarioCAM® HD outputs crisp and most detailed radiometric images of **up to 2048 x 1536 pixel** spatial resolution enabled by Jenoptik's ***Resolution Enhancement technology*** and offers a thermal resolution of **50 mK NETD**. Operating at a frame rate of up to 30 Hz, the camera provides a **real-time** image resolution of **1024 x 768 pixel**.

VarioCAM® HD is the world's first thermography camera featuring a built-in **laser rangefinder** for optimal temperature correction, autofocus support and precise geo-referencing in connection with the **built-in GPS** module. For immediate image control the camera offers a robust and extra-large **1280x800 pixel 5.6" TFT display** and an tiltable viewfinder. Versatile industry-proof standard interface options, including wireless and GigE-Vision allow for easy remote imaging.

Matching a broad variety of thermal imaging applications, a **great choice of high quality infrared optics** is available – of course, also made in Germany, manufactured by Jenoptik.

Applications:

- Industrial and scientific research & development
- Predictive and preventive maintenance
- Building inspection

VarioCAM® HD Thermographic Infrared Cameras

Precision Thermography with up to 2048 × 1536 IR Pixel Resolution

Specifications

	VarioCAM® HD 1024 inspect	VarioCAM® HD 1024 research	
Detector type	Uncooled microbolometer (Focal Plane Array)		
Image resolution [pixel]	1024 × 768	2048 × 1536 (RE mode)	1024 × 768
Image rate (@ max. image resolution)	30 Hz	n.s. [2]	30 Hz
Subframe modes & frame rates (optional)	640 × 480 (60 fps) I 384 × 288 (120 fps) I 1024 × 96 (240 fps)		
Spectral range	7.5 µm ... 14 µm		
Temperature measurement range [1]	-40 °C ... +1,200 °C I High temperature option: up to 2,000 °C		
Thermal resolution [NETD]	≤ 50 mK		
Measurement accuracy	± 1.5 K or ± 1.5 %		
Dynamic range	16 bit		
Laser rangefinder	Accuracy: ± 1.5 mm I Range: 70 m I Wavelength: 635 nm (red) I Laser class: 2		
Focus	Laser rangefinder supported autofocus I Passive autofocus I Motorized manual focus		
Display	Extra-large 5.6" color TFT display I 1280 × 800 pixel resolution I Suitable for daylight operation		
Viewfinder	Tiltable LCoS color viewfinder display I 800 × 600 pixel resolution		
Geo-localization	Built-in GPS for geo-referencing		
Digital VIS camera	CMOS color camera I up to 8 Megapixel resolution for image and video recording		
Audio	Integrated microphone and loudspeaker for image annotations		
Image / video storage	SDHC memory card		
Interfaces for image transfer	GigE-Vision I DVI-D I C-Video I WLAN (option)		
Interfaces for camera control	GigE-Vision I RS-232 I Trigger I USB 2.0 I Bluetooth (option)		
Power supply	External: 12 VDC ... 24 VDC I Battery: standard Li-Ion video camera battery		
Operating temperature	-25 °C ... +55 °C (operational)		
Storing temperature	-40 °C ... +70 °C		
Humidity	Relative humidity 10% ... 95%, non-condensing		
Shock	Operational: 25G, IEC 68-2-29		
Vibration	Operational: 2G, IEC 68-2-6		
Protection class	IP54		
Dimensions (with standard 1.0/30 mm lens)	210 mm × 125 mm × 155 mm [L × W × H]		
Weight (with standard 1.0/30 mm lens)	1.7 kg		
Measurement functions (selection)	Multiple measurement spots & ROIs I Hot/cold spot detection I Isotherms I Profiles I Differences		
Automatic functions (selection)	Focus I Image I Level I Range I NUC I Lens recognition I Image optimization I Alarm sequence		
Correction functions	LDC™ - Laser rangefinder based Distance Correction I Emissivity (manual or material table) Transmissivity I Ambient temperature I Humidity (option)		
Available lenses (with IP54-proof bayonet mount)	Super-Wide-Angle: 1.0 / 7.5 mm Wide-Angle: 1.0 / 15 mm Standard: 1.0 / 30 mm Telephoto: 1.0 / 60 mm Super-Telephoto: 1.0 / 120 mm	HFOV × VFOV, and minimum focus distance:	98° × 82° 100 mm 60° × 47° 200 mm 32° × 24° 300 mm 16° × 12° 2,000 mm 8° × 6° 4,000 mm

[1]) Overall range available for measurement and visualization. Four discrete sensitivity levels are used.
[2]) Single frame acquisition mode only. Frame rate for RE image series not specified yet. Live image refresh rate: 30 Hz.

JENOPTIK

JENOPTIK I Defense & Civil Systems
ESW GmbH - Sensor Systems
Pruessingstrasse 41 I 07745 Jena I Germany
Phone +49 3641 65-3942 I Fax -3494
infraredtechnology.dcs@jenoptik.com
www.jenoptik.com/infraredtechnology

Sales North / South Americas
JENOPTIK Advanced Systems, LLC
16490 Innovation Drive I Jupiter FL 33478 I USA
Phone +1 561 881-7400 ext. 1230 I Fax +1 561 88-1947
jdi.sales@jenoptik-inc.com

It is our policy to constantly improve the design and specifications. Accordingly, the details represented herein cannot be regarded as final and binding.

025007-004-001-04-99-14-0913-en

Welcome to e-cantonfair.com, Sign in | Join Free
Join as a qualified supplier
Guangzhou SAT I... verified supplier
2nd year Gold Member
SATIR | LEADING THE WAY IN THERMAL IMA

Guangzhou SAT Infrared Technology Co., Ltd.
Nico Chung
Can I help you ?
Contact supplier

UMTI Portable Surveillance Thermal Camera 160x120

FOB Price: To be determined

Introduction: Light weight monocular surveillance camera

Contact Supplier

Guangzh Technolo
Guang
Relev
Contact: N
Product Ra vision, surv camera, fire
Certification: N/A

Specifications

Portable Design, easy to operate
Build-in video-recording system (MP4 format)
General purpose rechargeable battery (Lithium Battery)
MIL-STD-810 standard encapsulation for harsh environments

Thermal Vision	
Detector Type	UFPA
Detector Scale	384×288
Spectral Range	8~14 um
NETD	≤80mk
FOV	12°x9°
Focus Range	10m~∞
Digital Zoom	2x
System Feature	
Control Mode	Control Key
Brightness/Contrast Control	Manual/Auto
Image Output Mode	View Finder/Video output
Storage	~20,000 images~1 hour video (with 2G storage space)
Viewfinder	High-resolution Gray Scale OLED, monocular
Video Output	PAL(or NTSC)
Power Supply	Li-Ion Rechargeable battery
Rated Voltage	7.2V
Power Consumption	<4W
Battery Operation Time	>3 hr
Start-up Time	<20s
Dimensions	188x94x80mm
Weight	650 g
Detection Range	
Human/meter	1125
Vehicle/meter	3450
Identify Range	
Human/meter	112

Vehicle/meter	345
Encapsulation	
Mil-spec	MIL-STD-810

THE OTHER PRODUCTS OF THIS SUPPLIER

YRH600 Explosion-proof thermal camera 384x288

Hotfind L-R Industrial Thermal Camera 384x288 IP54

E8-N/TN/GN Entry Level Thermal Camera 160x120 Portable 3"LCD

NV618W Automobile Safety Driving Assistant System

Contact the Supplier

From: **you** To: **supplier**

Subject

* This field is required.

Enter your message

* Message should contain 20-3000 characters.

Contact Now

Fair Member Services:service@cf-ec.com

Fair Member Services Hotline 020-32 438 433(Monday to Friday 9:00-17:00-18:00)

INFRARED CAMERAS

SEARCH

PRODUCTS

HYPERSPECTRAL IMAGING CAMERAS
- >Hyper-Cam
- >Hyper-Cam Methane
- >Airborne Platform
- >Reveal D&I
- >Motorized Polarizer Module

INFRARED CAMERAS
- >TS-IR Thermal Scientific IR Camera
- >HD-IR 1280 High Definition IR Camera
- >FAST-IR Rapid IR Camera
- >HDR-IR High Dynamic Range IR Camera
- >MS-IR Multispectral IR Camera

FEATURED VIDEO

Telops Hyper-Cam in a Gimbal

The Telops Hyper-Cam integrated into a fully automated gyrostabilized gimbal mounted in front of an helicopter.

SEE ALL VIDEOS

EXPERT ADVICE

YOU WANT TO INNOVATE BY INTEGRATING INFRARED SYSTEM SOLUTION TO YOUR BUSINESS ?

Vincent Farley will respond to your inquiry about infrared camera and instrumentation.

CONTACT HIM

HDR-IR High Dynamic Range IR Camera

The HDR-IR high dynamic range infrared camera series includes high performance cameras which cover extended scene temperature ranges.

These cameras maximize camera sensitivity automatically for any static or dynamic scenes. They find the best exposure time according to the scene and allow to resolve targets up to 2500°C.

Key Benefits

- Ultra-high dyanmic range ensure observation of scene targets with extremely high contrast and acc
- Real-time radiometric or uniformity corrected images
- Patent black body free correction technique
- Thermal sensitivity allows to detect temperature différences as small as 20 mK

DETECTOR SPECIFICATIONS

Click on the product name to download the datasheet.

	HDR-IR MW	HDR-IR VLW	HDR-IR HD InSb	HDR-IR HD MCT	HDR FA
Detector type	MCT	MCT	InSb	MCT	InSb
Spectral range	3 µm to 4.9 µm	7.7 µm to 11.8 µm	3 µm to 5 µm	3.7 µm to 4.8 µm	3 µm to
Spectral resolution	640 x 512 pixels	320 x 256 pixels	1280 x 1024 pixels	1280 x 1024 pixels	320 x 256
Detector Pitch	16 µm	30 µm	15 µm	15 µm	30 µr
Aperture size*	f/4	f/2	f/3	f/3	f/2.4
Sensor cooling	Rotary-stirling closed cycle	Rotary-stirling closed cycle	Rotary-stirling closed cycle	Split-stirling closed cycle	Split-stirlin cycl

*Other configurations available upon request

TYPICAL PERFORMANCES

	HDR-IR MW	HDR-IR VLW	HDR-IR HD InSb	HDR-IR HD MCT	HD F
Maximum full frame rate	115 Hz	300 Hz	105 Hz	50 Hz	15
Scene temperature range	Up to 2500°C				
Measurement accuracy	1 K or 1 % (°C) 2% (°C) with scene temperature <150°C				
NETD	20 mK	25 mK	22 mK	25 mK	25

ELECTRONIC SPECIFICATIONS

	HDR-IR MW	HDR-IR VLW	HDR-IR HD InSb	HDR-IR HD MCT	HDR FA
Exposure time	0.2 µs to full frame rate	0.5 µs to full frame rate	0.5 µs to full frame rate	16 µs to full frame rate	1 µs to ful rate

DALI
ZHEJIANG DALI TECHNOLOGY CO.,LTD
Professional Thermal Imaging Products Manufacturer
Sales & Support 86-571-86695666
Request A Quote - Email
Select Language

All Products
- IR Thermal Imaging Camera (34)
- Night Vision Thermal Imaging Camera (24)
- Handheld Thermal Imaging Camera (12)
- Uncooled Infrared Detectors (4)
- Thermal Imaging Module (6)
- Industrial Thermal Imager (14)
- Fixed Thermal Imaging Camera (20)
- Remote Thermal Imaging Camera (7)
- Long Distance Security Cameras (18)
- Thermal Security Camera (24)
- CCTV Surveillance System (17)
- Firefighter Thermal Imaging Camera (3)
- Vehicle Thermal Imaging Camera (3)
- Gas Detection Camera (3)

I'm Online Chat Now

Contact Us Today

Auto / Manual IP67 Thermal Imaging Binocular For Hunting / Marine Navigation

Large Image : Auto / Manual IP67 Thermal Imaging Binocular For Hunting / Marine Navigation

Product Details:

Place of Origin:	Zhejiang, China (Mainland)
Brand Name:	DALI
Certification:	CE
Model Number:	S750M

Payment & Shipping Terms:

Minimum Order Quantity:	1
Packaging Details:	basis on incasement request
Delivery Time:	2-4 weeks
Payment Terms:	L/C,T/T
Supply Ability:	200 Unit/Units

Submit Quiry

Detailed Product Description

Auto / Manual IP67 Thermal Imaging Binocular For Hunting / Marine Navigation

Quick Detail:

Place of Origin: Zhejiang, China (Mainland)
Brand Name: DALI
Model Number: S750M
Usage: Security
Theory: Infrared Thermometer
Detector type: Un-cooled FPA micro-bolometer
Array size: 384X288
Lens option: 61mm, Auto focus
Thermal sensitivity: ≤0.08°C@30°C
Frame frequency: 50Hz
Focus: auto/manual
Zoom: X2
Spectral range: 8-14um
Encapsulation: IP67
Photo and Record
GPS electronic compass
Laser range finder

Description:

S750M is portable, handheld thermal imaging binocular observation equipment for day and night searching and observation, has photo and record functions. With features of anti-shock and vibration, enjoys wide operating temperature range and other characteristics, used in the fields of night vision observation and surveillance, security smuggling, criminal investigation, search and r escue and othe r fields.

Applications:

Marine navigation
Personal security
Border surveillance
Hunting
Law enforcement

Technical specification

Items		S750M
Detector	Detector type	Uncooled FPA microbolometer
	Spectral range	8 ~ 14 μm
	Array size	384×288
	Pixel size	25μm
Machine Characteristics	NETD	≤80mk@30℃
Lens	Lens	61mm/F0.8
	Fov	9.0°×6.75°(±5%)
	Brightness enhancement	Auto/Manual
	Image enhancement	Yes
	Filtering	Yes

Information Machine	Laser range finder	Working band	1.55 μm(safe for human eye)
		Distance	20m~2Km
		Accuracy	≤2m
		Range	≤30m
		Success Rate	≥96%
		Working frequency	3/minute(urgency 10/minute)
	Target location accuracy	±2m(within1Km), ±5m(1Km-2Km)	
Environment	Operating temp	-20℃～+50℃(Standard)	
		-40℃～+60℃(Specially Made)	
	Storage temp	-40℃～+60℃(Standard)	
		-40℃～+65℃(Specially Made)	
	Encapsulation	IP67	
Power System	Battery type	Li-Ion, rechargeable	
	Battery operating time	3 hours continuous working,range detection of 100 times(at normal temperature)	

Contact Details

ZHEJIANG DALI TECHNOLOGY CO.,LTD
Contact Person: **Mr. Steve**
Tel:**86-571-86695666**
Fax:**86-571-86695600**

Send your inquiry directly to us

Please enter the inquiry details, such as product name, color, size, MOQ, FOB, etc.

(0 / 3000)

Submit Quiry

Other Products

- Industial LT3 IR Thermal Imaging Camera With 2m Drop Resistant
- Law Enforcement Applicat Thermal Imaging Binocular , Lightweight Thermal Imaging Cameras
- Waterproof Ultra - Compact Thermal Imaging Camera For Home Inspection
- Portable IR Thermal Imaging Camera S930H , Thermal Imaging Binocular For Security
- Handheld IP54 LT7-P IR Thermal Imaging Camera , Firefighter Thermal Imaging Camera
- Fusion Display IR Thermal Imaging Camera With 3.6" Touch Screen

About Us
- Company Profile
- Factory Tour
- Quality Control

IR Thermal Imaging Camera
- Auto Gas Detection IR Thermal Imaging Camera , Industrial Thermal Imager For Insulation Failure
- Parking Pot IR Thermal Imaging Camera , Industrial Thermal Imager
- Industrial IP67 IR Thermal Imaging Camera For Component Detective

Night Vision Thermal Imaging Camera
- CCD Visual Night Vision Thermal Imaging Camera , Infrared Thermal Imager With PTZ
- Double Visual IR Thermal Imaging Camera , CCTV Security Systems
- Online Industrial Night Vision Thermal Imaging Camera , Box Video Camera

Handheld Thermal Imaging Camera
- Fire Rescue Handheld Thermal Imaging Camera With Temperature Measurement Function
- Waterproof Digital Handheld Thermal Imaging Camera , 3.6" Touch Screen
- Lightweight Un - cooled IP54 Handheld Thermal Imaging Camera , 160*120

Contact Us
- Contact Info
- Request A Quote
- E-Mail
- Sitemap

China good quality IR Thermal Imaging Camera supplier. Copyright © 2015 ir-thermalimagingcamera.com. All rights reserved.

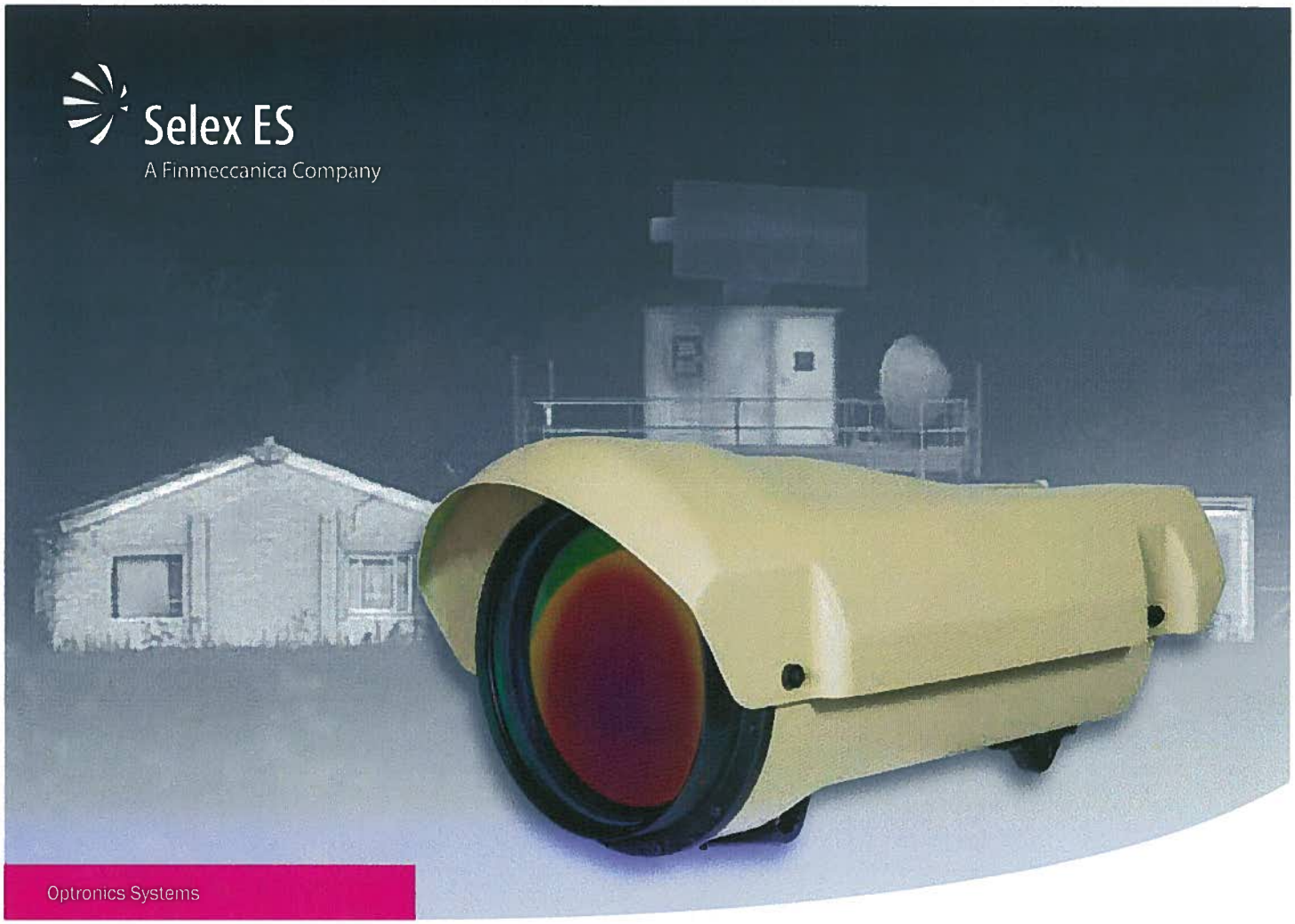

HORIZON SD/HD
THERMAL IMAGING CAMERA

The Horizon Medium Wave Infra-Red (MWIR) thermal imaging camera employs the latest focal plane array technology to meet long-range surveillance and target identification requirements.

Utilising a modular Integrated Detector Cooler Assembly, the camera is fitted with either Standard Definition (SD) or High Definition (HD) detector arrays. This design allows for rapid assembly and ease of maintenance.

Horizon HD provides a wider Field of View (FoV) for greater Situational Awareness, whilst delivering a narrower IFoV for longer range target identification and engagement.
Horizon cameras have been specifically designed with very long life cooling engines of 50,000 hours. This increases reliability and reduces through-life costs.

KEY BENEFITS

- Designed, developed and manufactured in the UK
- 'Dual Use' rated
- Very low through-life cost - 50,000 hours cooling engine life
- Ease of integration – video and communication over Ethernet
- Multiple digital and analogue video outputs
- ONVIF control and video interface
- Latest image processing
  - Turbulence mitigation
  - Image stabilisation
  - Local area contrast enhancement
- Ultra narrow field of view: 0.6°
- Qualified to operate from -40°C to +55°C
- Extended warranty options
- Finance options available
- Service provision contracts options

The Camera that Sees Further than You Can

TECHNICAL SPECIFICATION

Detector array resolution	640 x 512 (SD), 1280 x 720 (HD)
Detector pitch	16µm (SD), 12µm (HD)
FOV	7.3 x 5.9 degrees to 0.6 x 0.5 degrees (SD) 11.0 x 6.2 degrees to 0.9 x 0.5 degrees (HD)
Detector technology	CMT
Band	3.7µm - 4.95µm
F/Number	F/4
Focal length of continuous optical zoom	80-960mm
Comms	RS-422 Ethernet
Analogue video output	NTSC PAL (CCIR) HDTV 720p
Digital video output	HD-SDI Ethernet (H264, ONVIF)
Operating temperature	-40°C to 55°C
Weight	23kg
Size (L x W x H)	596.5mm x 299mm x 299mm
Power source	28VDC (18-32V)
Nominal power at steady state	<25W
Dynamic range enhancement	LACE Linear Edge enhancement
Image stabilisation	Yes
Turbulence mitigation	Yes
Auto focus	Yes
Cooling engine	Long life linear (50,000hrs)
Non-uniformity corrector	Built-in reference and quadratic NUC
E-Zoom	Interpolated (up to 8x)

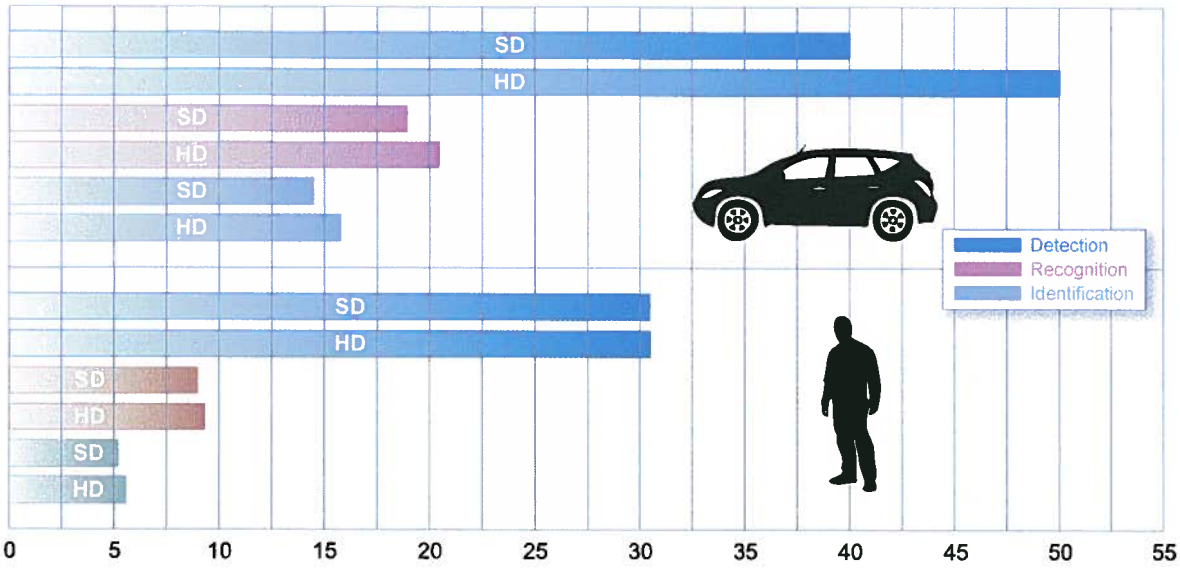

For more information please email infomarketing@selex-es.com
Selex ES Ltd - A Finmeccanica Company
Southampton First Avenue - Millbrook Industrial Estate - Southampton - Hampshire - SO15 0LG - Tel: +44 (0) 2380 702300
This publication is issued to provide outline information only and is supplied without liability for errors or omissions. No part of it may be reproduced or used unless authorised in writing.
We reserve the right to modify or revise all or part of this document without notice.
2014 © Copyright Selex ES Ltd

DALI

ZHEJIANG DALI TECHNOLOGY CO.,LTD

Professional Thermal Imaging Products Manufacturer

Sales & Support 86-571-86695666
Request A Quote - Email
Select Language

Home | Products | About Us | Factory Tour | Quality Control | Contact Us | Request A Quote

Home > Products > Fixed Thermal Imaging Camera > Cooled Long Distance Fixed Thermal Imaging Camera For CCTV Surveillance

All Products

- IR Thermal Imaging Camera (34)
- Night Vision Thermal Imaging Camera (24)
- Handheld Thermal Imaging Camera (12)
- Uncooled Infrared Detectors (4)
- Thermal Imaging Module (6)
- Industrial Thermal Imager (14)
- Fixed Thermal Imaging Camera (20)
- Remote Thermal Imaging Camera (7)
- Long Distance Security Cameras (18)
- Thermal Security Camera (24)
- CCTV Surveillance System (17)
- Firefighter Thermal Imaging Camera (3)
- Vehicle Thermal Imaging Camera (3)
- Gas Detection Camera (3)

I'm Online Chat Now

Contact Us Today

Cooled Long Distance Fixed Thermal Imaging Camera For CCTV Surveillance

Large Image : Cooled Long Distance Fixed Thermal Imaging Camera For CCTV Surveillance

Product Details:

Place of Origin:	Zhejiang, China (Mainland)
Brand Name:	DALI
Certification:	CE
Model Number:	DLD-M600

Payment & Shipping Terms:

Minimum Order Quantity:	1
Packaging Details:	basis on incasement request
Delivery Time:	2-4 weeks
Payment Terms:	L/C,T/T
Supply Ability:	200 Unit/Units

Submit Query

Detailed Product Description

Cooled Long Distance Fixed Thermal Imaging Camera For CCTV Surveillance

Quick Detail:

- 600mm focal length, ultra long-range observation distance
- 15KM vehicle/30KM medium vessel security detection
- Triple FOV, meets the different r equirement of detection ,recognition, identification
- FOV switch time <1S
- Digital Detail Enhancement(DDE)
- Multiple user defined auto mode , meets different targets observation require ment in different environment.
- RS422 re mote control
- Rugged hou sing,compact structure,high protection encapsulation(IP67)

Applications:

Suitable for border, maritime, ports and islands where require day and night sec urity surveillance.

Technical specification:

Item		Specification	
Detector	Detector type	HgTeCd Cooled FPA detector	
	Array size/format	320×256	640×512
	Pixel pitch	30μm	15μm
Image characteristics	Field of view(FOV)	WFOV: 11°×8.8° MFOV: 2.2°×1.76° NFOV: 0.92°×0.73°	
	Focal length	50/250/600mm	
	Spatial resolution	WFOV:0.6mrad MFOV 0.12 mrad NFOV 0.05mrad	
	FOV switch time	≤1s	
	NETD	≤35mk@30℃,F4	
	Frame frequency	50Hz	
	Focus	Auto/Electrical manual focus	
	Spectral range	3.7~4.8μm	
Thermal operation	Starting time	<8min(In normal temperatu re 25 degrees)	
	Brightness/gain adj ustment	manual brightness/gain adj ustment; auto brightness/gain adjustment	
	auto brightness/gain configuration adjustment	2 fix pattern,8 user defined setting pattern	
	Polarity reversal	Black hot/White hot	
	Zoom	2x	
	Noise reduction	Yes	
	DDE	Yes	
	Calibration	Automatic and manual calibration	
	Crosshair	Display/Hidden	
Power system	External power supply	24±3V DC	
	Power consumption	<14W(In normal temperature 25℃ normal work)	
Environment	Operating temperature	-40℃~ +55℃	
	Storage temperature	-45℃~+65℃	
	Encapsulation	IP67	
Physical	Weight	≤7Kg	

Contact Details

ZHEJIANG DALI TECHNOLOGY CO.,LTD
Contact Person: **Mr. Steve**
Tel:**86-571-86695666**
Fax:**86-571-86695600**

Send your inquiry directly to us

Please enter the inquiry details, such as product name, color, size, MOQ, FOB, etc.

(0 / 3000)

Submit Quiry

Other Products

- Long Distance Fixed Thermal Imaging Camera For Residential District , IP67
- Remote Control Fixed Thermal Imaging Camera , Online Dual FOV Monitoring System
- Waterproof CCTV Surveillance Fixed Thermal Imaging Camera With Night Vision
- Temperature Measurement Thermal Imaging Security Camera With 24/7 Monitoring
- Multi - interface Thermal Imaging Camera , Auto / Electri Infrared Thermal Imager
- Wifi Night Vision Thermographic Camera For Surveillance System

China good quality IR Thermal Imaging Camera supplier. Copyright © 2015 ir-thermalimagingcamera.com. All rights reserved.

ZHEJIANG DALI TECHNOLOGY CO.,LTD
Professional Thermal Imaging Products Manufacturer
Sales & Support 86-571-86695666
Request A Quote - Email
Select Language

All Products
- IR Thermal Imaging Camera (34)
- Night Vision Thermal Imaging Camera (24)
- Handheld Thermal Imaging Camera (12)
- Uncooled Infrared Detectors (4)
- Thermal Imaging Module (6)
- Industrial Thermal Imager (14)
- Fixed Thermal Imaging Camera (20)
- Remote Thermal Imaging Camera (7)
- Long Distance Security Cameras (18)
- Thermal Security Camera (24)
- CCTV Surveillance System (17)
- Firefighter Thermal Imaging Camera (3)
- Vehicle Thermal Imaging Camera (3)
- Gas Detection Camera (3)

I'm Online Chat Now

Contact Us Today

Manual Portable Thermal Imaging Module , 640X480 Thermal Camera Module

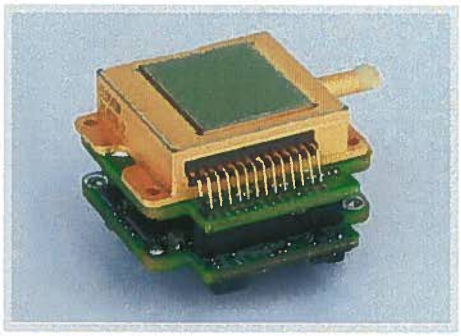

Large Image : Manual Portable Thermal Imaging Module , 640X480 Thermal Camera Module

Product Details:

Place of Origin:	**Zhejiang, China (Mainland)**
Brand Name:	**DALI**
Certification:	**CE**
Model Number:	**D840**

Payment & Shipping Terms:

Minimum Order Quantity:	**1**
Packaging Details:	**basis on incasement request**
Delivery Time:	**2-4 weeks**
Payment Terms:	**L/C,T/T**
Supply Ability:	**200 Unit/Units**

Submit a Quotation

Detailed Product Description

Manual Portable Thermal Imaging Module , 640X480 Thermal Camera Module

Quick Detail:

Place of Origin: Zhejiang, China (Mainland)
Brand Name: DALI
Model Number: D880
Usage: Security
Theory: Infrared Thermometer
Detector type: Un-cooled FPA micro-bolometer
Array size: 640X480
Pixel size:17μm
Thermal sensitivity: ≤60mK(f/1,300K,25-50Hz)
Temp control: TEC
Digital zoom: 2X,3X,4X
Power consumption: ≤2W(normal atmospheric temp)
Frame frequency: 50Hz

Description:

DALI detector contributes to high price & performance ratio
Small size & Low weight, multiple interface, easy for your integration
High resolution, good image quality
Low consumption for longer continuation
Pseudo color optional for your easy observation
Low and wide voltage power supply,0.5V~5V
Wide operational temperature extended to -40℃~ +60℃

Applications:

Marine navigation
Personal security
Border surveillance
Hunting
Law enforcement

Technical specification:

		D840
Detector characteristics	Detector type	Uncooled FPA microbolometer
	Array size	640X480
	Pixel	17um
	Spectral range	8～14um
	Temp control	TEC
	NETD	≤60mK(f/1,300K,25-50Hz)
	Thermal time constant	≤5ms
	Frame rate	50Hz
	Display resolution	640x480

Environment	Operation temperature	-15℃~ +50℃ (Can expanded to -40℃~ +60℃)
	Storage temperature	-40℃~ +70℃
	Humidity	5~95%,Non condensing
physical characteristics	Size(mm)	W40mm× H41mm× D35mm
	Weight	≤76g(including housing,shutter)
	Lens mount interface	M34×0.75 ;screw thread
	Mechanical interface	2×M3(four sides);screw hole
	Electrical connector	26 pins connector(including cable)

Competitive Advantage:

- Extremely compact and extremely light
- Image capture and recording

Contact Details

ZHEJIANG DALI TECHNOLOGY CO.,LTD
Contact Person: **Mr. Steve**
Tel:**86-571-86695666**
Fax:**86-571-86695600**

Send your inquiry directly to us

Please enter the inquiry details, such as product name, color, size, MOQ, FOB, etc.

(0 / 3000)

Submit Query

Other Products

- Small Size OEM Thermal Imaging Module For System Integration , 384X288
- Low Power Consumption Un - cooled Thermal Imaging Module For Hunting
- Universal Un - cooled Infrared Thermal Imaging Module For Coastal Defense
- Lightweight Thermal Imaging Cores For Port security , Thermal Imaging Camera Module
- 8-14um IP54 Industrial Thermal Imaging Module For Security Surveillance

About Us
- Company Profile
- Factory Tour
- Quality Control

IR Thermal Imaging Camera
- Auto Gas Detection IR Thermal Imaging Camera , Industrial Thermal Imager For Insulation Failure
- Parking Pot IR Thermal Imaging Camera , Industrial Thermal Imager
- Industrial IP67 IR Thermal Imaging Camera For Component Detective

Night Vision Thermal Imaging Camera
- CCD Visual Night Vision Thermal Imaging Camera , Infrared Thermal Imager With PTZ
- Double Visual IR Thermal Imaging Camera , CCTV Security Systems
- Online Industrial Night Vision Thermal Imaging Camera , Box Video Camera

Handheld Thermal Imaging Camera
- Fire Rescue Handheld Thermal Imaging Camera With Temperature Measurement Function
- Waterproof Digital Handheld Thermal Imaging Camera , 3.6" Touch Screen
- Lightweight Un - cooled IP54 Handheld Thermal Imaging Camera , 160*120

Contact Us
- Contact Info
- Request A Quote
- E-Mail
- Sitemap

China good quality IR Thermal Imaging Camera supplier. Copyright © 2015 ir-thermalimagingcamera.com All rights reserved.

ZHEJIANG DALI TECHNOLOGY CO.,LTD
Professional Thermal Imaging Products Manufacturer
Sales & Support 86-571-86695666
Request A Quote - Email
Select Language

All Products
- IR Thermal Imaging Camera (34)
- Night Vision Thermal Imaging Camera (24)
- Handheld Thermal Imaging Camera (12)
- Uncooled Infrared Detectors (4)
- Thermal Imaging Module (6)
- Industrial Thermal Imager (14)
- Fixed Thermal Imaging Camera (20)
- Remote Thermal Imaging Camera (7)
- Long Distance Security Cameras (18)
- Thermal Security Camera (24)
- CCTV Surveillance System (17)
- Firefighter Thermal Imaging Camera (3)
- Vehicle Thermal Imaging Camera (3)
- Gas Detection Camera (3)

I'm Online Chat Now

Contact Us Today

High Resolution Uncooled Infrared Detectors With Completely Independent Core Technology , 640*480

Detailed Product Description

High Resolution Uncooled Infrared Detectors With Completely Independent Core Technology , 640*480

Quick Detail:

Place of Origin: Zhejiang, China (Mainland) Brand Name: DALI
Model Number: DLC640/DLD640
Usage: Security
Detector type: Un-cooled FPA micro-bolometer
Array size: 640X480 Pixel pitch: 25um/17um
Spectral range: 8-14um Frame frequency: 25~50Hz
Thermal sensitivity: ≤60mk@(f/1;300k)

Description:

The Uncooled Microbolometer infrared FPA detector researched and developed by Dali has already been applied in industrial production. It has the advantages of high resolution, high sensitivity, low fixed pattern noise and fast response.Detector is manufactured in Standard MIL STD810/813, applicable to different industry.

Specifications:

Item	DLC640/DLD640 (25μm / 17μm)
Material	amorphous silicon
Array size	640×480
Pixel pitch	25μm / 17μm
Fill factor	≥60%
Spectral range	8-14μm
Temperature control	TEC
Frame rate	25Hz single / 50Hz double end
NETD	≤60mK(f/1,300K,25-50Hz)
Thermal time constant	≤5ms
Responsivity	≥8mV/K
Operability	≥99%
Power supply	5V
Power consumption	≤300mW(excluding TEC)
Output	single / double end
Dimension	32mm×23.5mm×7.6mm(pin is not included)
Weight	≤20g
Operating temperature	-40°C - +60°C
Storage temperature	-40°C - +85°C
Standards	MIL-STD-810 and -883

Competitive Advantage:

- Different resolution
- Short integral time
- Stable performance in temperature range -40℃ to +60℃
- Extremely low thermal noise
- Excellent nonuniformity

Contact Details

ZHEJIANG DALI TECHNOLOGY CO.,LTD

Contact Person: **Mr. Steve**

Tel:**86-571-86695666**

Fax:**86-571-86695600**

Send your inquiry directly to us

Please enter the inquiry details, such as product name, color, size, MOQ, FOB, etc.

(0 / 3000)

Submit Query Now

Other Products

- High Sensitivity Uncooled Infrared Detectors For Temperature Measurement
- FPA Amorphous Silicon Stable Uncooled Infrared Detectors For Online Monitoring
- Industrial Uncooled Infrared Detectors , Security Thermal IR Camera

About Us
- Company Profile
- Factory Tour
- Quality Control

IR Thermal Imaging Camera
- Auto Gas Detection IR Thermal Imaging Camera , Industrial Thermal Imager For Insulation Failure
- Parking Pot IR Thermal Imaging Camera , Industrial Thermal Imager
- Industrial IP67 IR Thermal Imaging Camera For Component Detective

Night Vision Thermal Imaging Camera
- CCD Visual Night Vision Thermal Imaging Camera , Infrared Thermal Imager With PTZ
- Double Visual IR Thermal Imaging Camera , CCTV Security Systems
- Online Industrial Night Vision Thermal Imaging Camera , Box Video Camera

Handheld Thermal Imaging Camera
- Fire Rescue Handheld Thermal Imaging Camera With Temperature Measurement Function
- Waterproof Digital Handheld Thermal Imaging Camera , 3.6" Touch Screen
- Lightweight Un - cooled IP54 Handheld Thermal Imaging Camera , 160*120

Contact Us
- Contact Info
- Request A Quote
- E-Mail
- Sitemap

China good quality IR Thermal Imaging Camera supplier. Copyright © 2015 ir-thermalimagingcamera.com. All rights reserved.

Thermal image sensors

17 µm

THERMAL IMAGE SENSORS

GEN2

BY ULIS

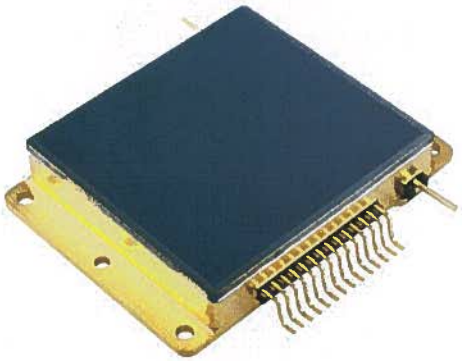

PICO1024-048

Pico*1024 Gen2* ™

1024 x 768

Military

Surveillance & Security

Thermography

ULIS

Infrared for you

www.ulis-ir.com

PICO1024-048

Pico1024 Gen2™

1024 x 768 - 17 µm

High performance, high definition infrared imaging

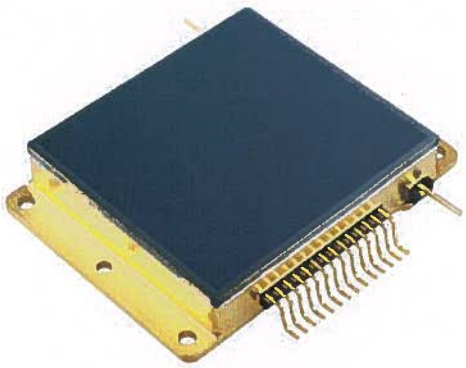

PERFORMANCE

- NETD < 50 mK (F/1, 300K, 30Hz)
- Frame rate up to 120Hz
- Typical array operability > 99.9%
- Low power consumption < 210 mW
- Extended operating temperature range: - 40°C to + 85°C
- Standards: MIL-STD-810 and -883
- Over exposure / Sun safe

FEATURES

- Material: resistive amorphous silicon
- Spectral response: 8 - 14 µm
- Readout configuration driven by serial link
- Overall dimension (mm): 41.2 x 30 x 6.6 pin out excluded
- Weight < 30 g
- Easy TEC-less implementation

- **High resolution, high contrast imaging for long range detection**
- **Robust for extreme environments (e.g. TWS, RWS, situation awareness, UGS)**
- **Detects fast moving objects**
- **Reduced calibration time**
- **24/7 surveillance capable**
- **Footprint compatible with UL05251-026**

ULIS IN BRIEF

- A unique business model designed to serve OEMs
- High production capacity
- High-performance and cost-effective products
- Guaranteed product availability
- Customer partnership to assure success
- A dedicated customer support team

ULIS
Infrared for you

ZI Les Iles Cordées
BP 27 - 38113 Veurey-Voroize - France
Phone: +33 4 76 53 74 70 - Fax: +33 4 76 53 74 80
www.ulis-ir.com - ulis@ulis-ir.com

ELS-02-2015/01

BUREAU VERITAS
ISO 9001
ISO 14001
OHSAS 18001

Groupe SOFRADIR

Pictures: ULIS - Layout: Komago - Printing: in France - All right reserved
This document contains proprietary information of ULIS. This document is not to be copied in whole or part. Information furnished in this statement herein is believed to be accurate and reliable. However, ULIS assumes no responsibility for the consequences which may result from its use. Information mentioned in this statement are subject to change without notice.

Search...

Shop > Products > UnCooled LWIR Infrared sensor (8 to 14 microns)

View Cart

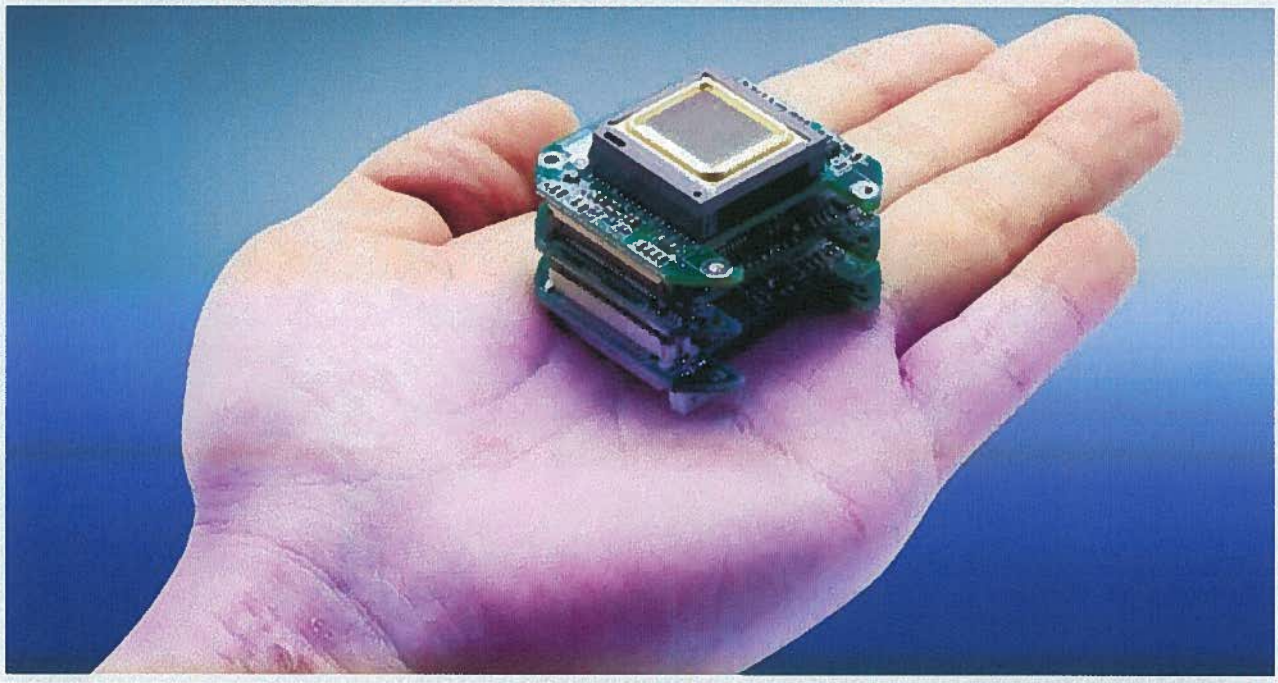

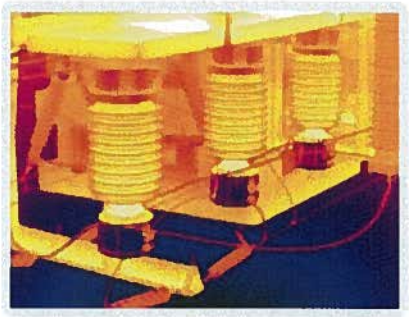

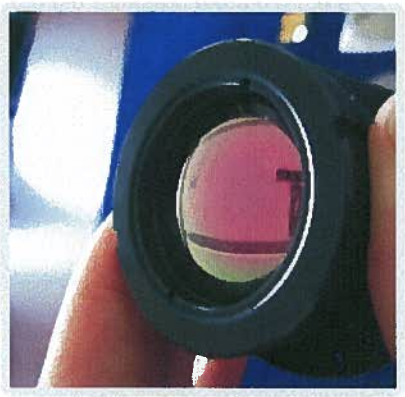

Question? Chat or call here now!

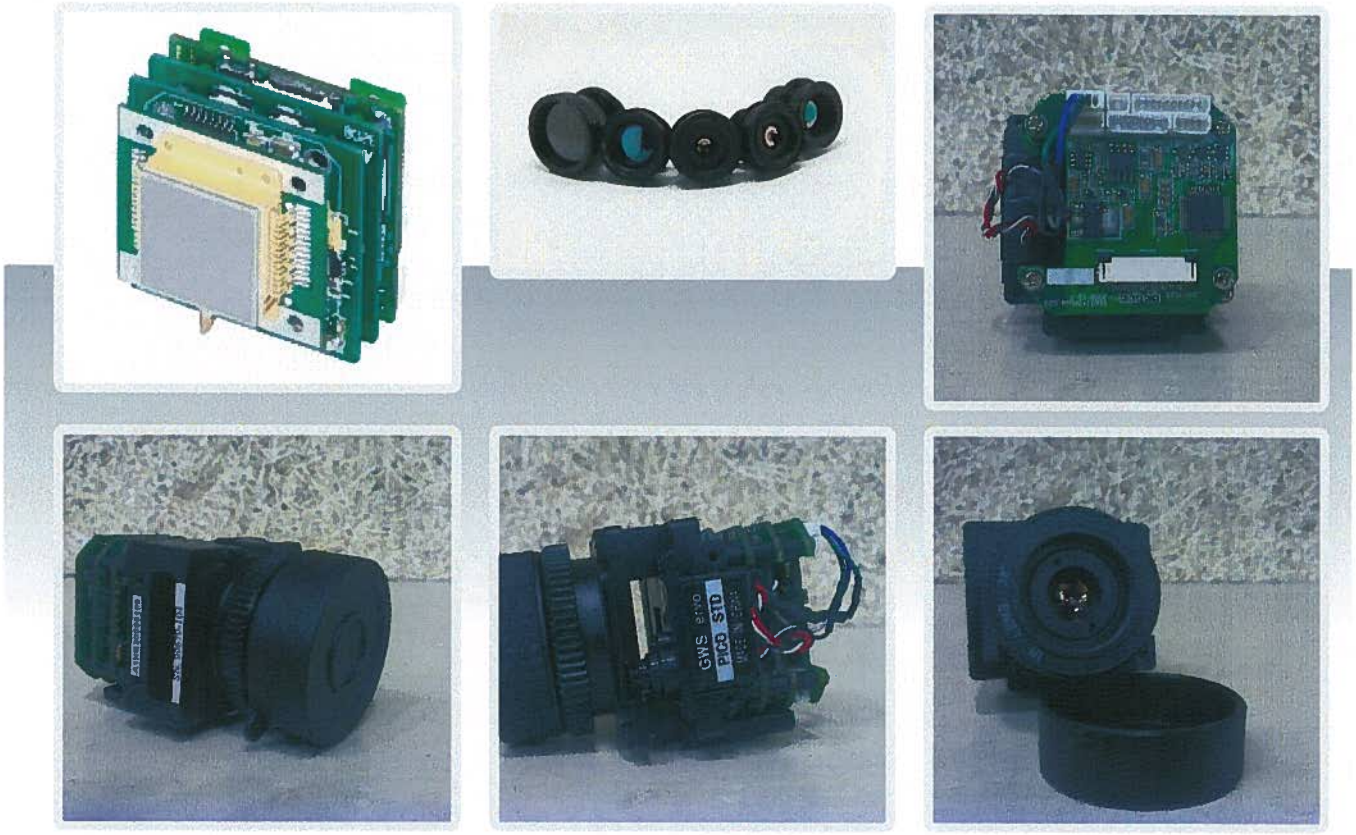

UnCooled LWIR Infrared sensor (8 to 14 microns)

From: $1,380

Core model Choose an option...

Lens Choose an option...

Quantity Choose an option...

3 types:

- ASP-HR160 160 x 120
- ASP-HR320 384 x 288
- ASP-HR640 640 x 480

None ITAR, exportable

More informations

Categories: 8 to 14 microns LWIR, Biology & Microscopy, Defence & Security, Microbolometer. Tags: custom, infrared sensor, swir camera, uncooled, VS Tech lens.

Question? Chat or call here now!

Description | Additional Information

Reviews (0)

Product Description

From our offices in Canada and Taiwan R.O.C. (Republic of China) we offer uncooled IR imaging modules from 8 to 12 microns.

These sensors are highly responsive and have been adapted for a wide range of applications. The sensor can be purchased either on it's own or with a multitude of different lenses.

The high frame rate output (60Hz @ NTSC or 50Hz @ PAL) enables greater image quality for a wide range of applications than does that of other companies' models.

32 bit SDK available.

We offer the following modules:

- Uncooled Thermal Module(640×480)
- Uncooled Thermal Module(384×288)
- Uncooled Thermal Module(160×120)

HR320 Core Manual

More informations

Need a Germanium Lens design and assembly?

Standard Germanium Optical Lens

Resolution

The camera cores vary in size enabling the customer to choose the most suitable type according to their own requirements.

Compact, light and tiny

The camera core is about 50g (not including lens) and exceptionally small facilitating target integration.

Control functions

Parameters, including brightness, contrast, auto-gain can be set by the user. The customer can also establish parameters via the RS232 interface.

Digital zoom

Our camera core has 2X/4X zoom function. Digital zoom will be of great help when the target is too small to identify.

NTSC & PAL video output

We supply PAL or NTSC, 16-bit parallel digital signal or analog signal. Video format must be specified at time of order.

Contact Us for more details or to get an official quote.

Question? Chat or call here now!

Application Images:

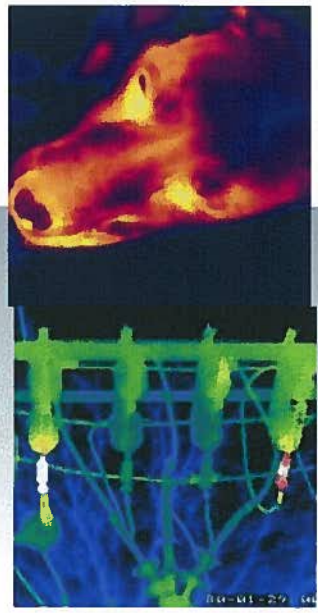

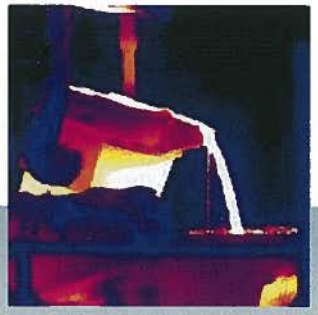

Specifications

Type	ASP-HR160	ASP-HR320	ASP-HR640
	Imaging Performance		
Detector Type	FPA, Uncooled Microbolometer		
Resolution	160 x 120	384 x 288	640 x 480
Spectral Range	8-14 um		
Thermal Sensitivity	80mK @ 300K	50mK @ 300K	60mK @ 300K
Field of View	Lenses are optional, FOV varies according to different lenses		
Focus	Manual/Automatic		
Image Frequency	60 Hz @ NTSC or 50 Hz @ PAL		
	Image Presentation		
Video Output	PAL or NTSC, 14-bit parallel digital signal or analog signal. Video format must be specifified at time of order.		
	Power		
Working Voltage	DC 7 – 12 V		

Question? Chat or call here now!

Power Consumption	< 2W	<2.5 W	< 3 W
	Environmental Specifications		
Operating Temperature Range	-40°C to 60°C		
Storage Temperature Range	-40°C to 70°C		
Humidity	<95%, non-condensing		
	Physical Characteristics (without lens, core only)		
Size (L x W x H)	40 mm x 40 mm x 30 mm		45 mm x 45 mm x 37 mm
Weight	50g		
	Interface		
RS232	Command and Control Functions		

Applications:

- Thermology
- Thermal Imaging for Automation
- Night Vision
- Surveillance
- Security of Nuclear Plan
- Law Enforcement
- Infrared Camera for Building Diagnostics
- Automotive Night Vision
- Aviation and Maritime Enhance Vision
- Electrical and Mechanical Thermal Imaging
- Thermal Imaging for Gas Detection
- Furnace and Boiler Inspection
- Medical/Biology
- Maritime
- Power plants
- Metal Production
- Petrochemicals

Question? Chat or call here now!

New Imaging Technologies: design and manufactures CMOS imaging sensors and CMOS cameras which include smart sensor features and wide dynamic range. The

WDR InGaAs Product Range

Description

For laser measurements, high temperature thermography, Coastal surveillance, bio medical imaging, waste sorting...

NIT introduces his new **WDR InGaAs products family**, including **sensors and camera modules**.

NIT Short Wave Infrared (SWIR) products are based on a proprietary **Wide Dynamic Range ROIC technologies** and offer a **Dynamic Range (DR) of more than 140dB in a single image without any external control.**

The internal Fixed Pattern Noise correction gives a **high uniformity pcitures in all light conditions** with no need of Look-up table.

The NIT WDR InGaAs sensors use **InGaAs photodiodes array** operating **from 900nm up to 1700nm** with a high QE and coupled to a patented Read Out Circuit (ROIC).

The camera modules, WiDy SWIR family, offer different interfaces compatibility with an exterme ease of use :

- The **digital version** are delivered with a full Software development kit (SDK), WiDy View, operating under Microsoft Windows.
- The **analog version** gives direct SWIR video flux through composite connection.

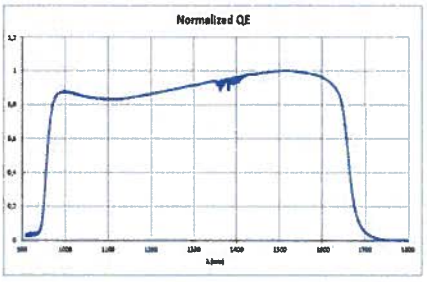

Spectral response

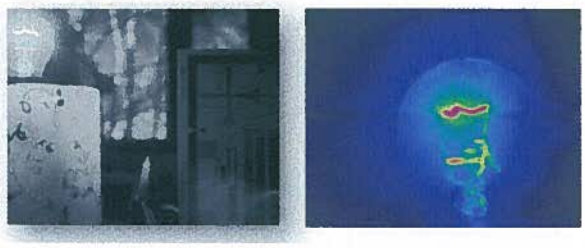

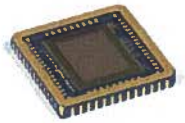

WDR InGaAs Sensors Family

White papers & Application Notes

Native WDR™ Technology : Novel Wide Dynamic Range CMOS Imagers.

ESSCIRC 2001 - A CMOS Image sensor with on-chip FPN compensation

Native WDR™ Sensor Technology for Welding Applications

DSS SPIE 2011 : Wide Dynamic Range ROIC & InGaAs for SWIR imaging

ISW2011 - Native WDR Sensor Technology

	Resolution	Pixel Size (µm²)	Optical Format	Frame Rate	Dynamic Range	Trigger In/Out	Output	Related Documents
NSC0803-SI	320 x 256	25x25	2/3"	150fps	140 dB	Rolling	Analog	On request
NSC1101-SI	640 x 512	15x15	1"	60fps	140 dB	Rolling	Analog	On request
NSC1201-SI	640 x 512	15x15	1"	60fps	140 dB	Snapshot	Analog	On request

WDR InGaAs Modules Family

Camera	Resolution	Output	Frame Rate	ADC	Operation Mode	Dynamic Range	Trigger In/Out	Software	Related Documents
WiDy SWIR 320A	320 x 256	Analog TV	50/60fps	--	Rolling shutter	140 dB	--	--	On request
WiDy SWIR 320U	320 x 256	USB 2.0	140fps	14 bit	Rolling shutter	140 dB	Trigger In/Out	WiDy View SDK	On request
WiDy SWIR 640U	640 x 512	USB 2.0	60fps	14 bit	Rolling shutter	140 dB	Trigger In/Out	WiDy View SDK	On request
WiDy SWIR 640A	640 x 512	Analog TV	50/60fps	--	Rolling shutter	140 dB	--	--	On request

See a video on our WiDy Swir

More information

Our General Terms & Conditions

© New Imaging Technologies | Contact : 1-4 impasse de la noisette, Bat D, 1er Etage - 91370 Verrières le Buisson - France
Legal statements - Credit

Mikro Tasarım San. ve Tic. Ltd. Şti

EN TR

About Press

Home Us Products Applications Career

Contact

ROIC Products

MT6425CA
CTIA ROIC
640x512 format
25µm pixel pitch
Si, InGaAs, MCT

MT6415CA
CTIA ROIC
640x512 format
15µm pixel pitch
Si, InGaAs, MCT

MT12815CA
CTIA ROIC
1280x1024 format
15µm pixel pitch
Si, InGaAs, MCT

MT3825BA
µBolometer ROIC
384x288 format
25µm pixel pitch
Resistive Pixels

MT6425DA
DI ROIC
640x512 format
25µm pixel pitch
InSb, QWIP, MCT, T2SL

MT6415DA
DI ROIC
640x512 format
15µm pixel pitch
InSb, QWIP, MCT, T2SL

MT12815DA
DI ROIC
1280x1024 format
15µm pixel pitch
InSb, QWIP, MCT, T2SL

MT3817BA
µBolometer ROIC
384x288 format
17µm pixel pitch
Resistive Pixels

MT6420DDA **MT6410DA** **MT12810DA** **MT6417BA**

Dual-DI ROIC	**DI ROIC**	**DI ROIC**	**µBolometer ROIC**
640x512 format	640x512 format	1280x720 format	640x480 format
20µm pixel pitch	10µm pixel pitch	10µm pixel pitch	17µm pixel pitch
InSb, QWIP, MCT, T2SL	InSb, QWIP, MCT, T2SL	InSb, QWIP, MCT, T2SL	Resistive Pixels

MT6425DDA	MT3825DDA	MT10225DDA	MT10217BA
Dual-DI ROIC	**Dual-DI ROIC**	**Dual-DI ROIC**	**µBolometer ROIC**
640x512 format	384x288 format	1024x768 format	1024x768 format
25µm pixel pitch	25µm pixel pitch	25µm pixel pitch	17µm pixel pitch
InSb, QWIP, MCT, T2SL	InSb, QWIP, MCT, T2SL	InSb, QWIP, MCT, T2SL	Resistive Pixels

MT20415SA	MT40915SA	MT40910SA	MT6412BD
SF ROIC (Astronomy)	**SF ROIC (Astronomy)**	**SF ROIC (Astronomy)**	**µBolometer D-ROIC**
2048x2048 format	4096x4096 format	4096x4096 format	640x480 format
15µm pixel pitch	15µm pixel pitch	10µm pixel pitch	12µm pixel pitch
Si, InGaAs, InSb, MCT	Si, InGaAs, InSb, MCT	Si, InGaAs, InSb, MCT	Resistive Pixels

Test Electronics and Demo Cameras

MT-USB-CAM-6415

NanoCAM-6415

MT-USB-CAM-E6415

ROIC Driver and Digitizer ASIC Products

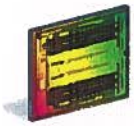

MTAS1410X2 / MTAS1410X4 (ROIC Driver and Digitizer ASICs)

Product Properties	
DI	Direct Injection
CTIA	Capacitive Trans-Impedance Amplifier
SF	Source Follower
ROIC	Readout Integrated Circuit
D-ROIC	Digital ROIC
Si	Silicon
InSb	Indium Antimonide
InGaAs	Indium Gallium Arsenide
MCT	Mercury Cadmium Telluride
QWIP	Quantum Well Infrared Photodetector
Dual-DI	Dual-Polarity Direct Injection
T2SL	Type II Superlattice
ASIC	Application Specific Integrated Circuit

©2015 Mikro-Tasarım. All rights reserved. Back to top

Custom infrared ROIC design

Custom ROIC design

Our ROIC design team is a group of highly skilled analog and digital designers. They design ROICs for InGaAs, QWIP, MCT, Bolometer, hybrid visible sensors or new emerging technologies. They create complex, high performance analog and digital full-custom CMOS integrated circuits. These offer major advantages to customers who seek customized solutions in applications where state-of-the-art designs are needed.

You can find examples of our designs in industrial automation, aerospace and aviation systems, automotive applications, (bio)-medical instrumentation, telecommunication, fiber optic sensing, and consumer products.

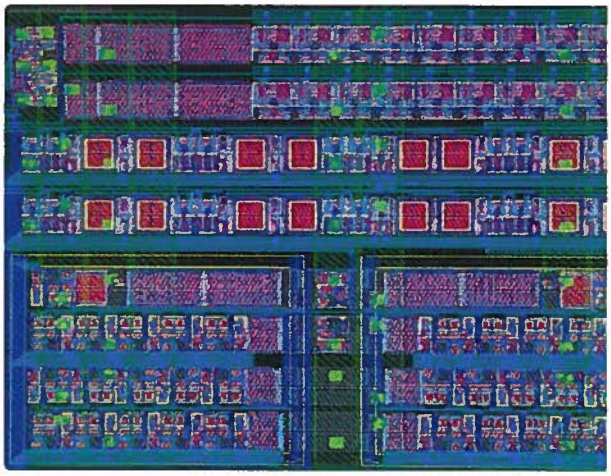

Full-custom designs generally require low noise, low dark current, or low power operation combined with high speed. Camera applications seek optimizations for short or long exposure times; complex windowing capability; specific pixel layouts. All these designs focus on the best possible performance level for a specific application, while keeping interfaces simple and recurring production costs low.

What do we offer?

Xenics has experience in a wide range of technologies and system applications but particularly in the field of infrared vision sensors. Our experience includes designs for high-performance, one-dimensional and two-dimensional, cooled as well as uncooled sensors for wavelengths ranging from NIR over SWIR, MWIR to LWIR.

Can't find what you're looking for?

Contact your regional support or sales team for help and detailed information.

GET IN CONTACT »

Xlin detector series

The Xlin detector series supports a unique combination of features for high-speed imaging applications in machine vision and spectroscopy.

LEARN MORE »

Xlin-1.7-3000

The high resolution Xlin-1.7-3000 InGaAs detector is specifically designed for earth observation.

LEARN MORE »

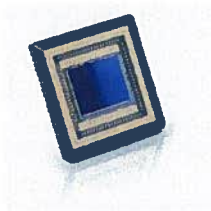

XFPA-1.7-640-LN2

The XFPA-1.7-640-LN2 excels in performance for any R&D spectroscopy or semiconductor failure analysis task.

LEARN MORE »

DOCUMENTS

PRESS RELEASES

Xenics InGaAs SWIR detector is part of the Proba-V space mission — Three Xlin-1.7-3000 linear arrays are launched into space aboard the ESA's Proba-V satellite (2013)

WHITEPAPERS

First results of the Xlin-1.7-3000 on board of the Proba-V satellite — The design, the qualification and the results of the Xlin-1.7-3000 on board of Proba-V satellite.

ALL THAT'S NEW

News Events

Type - ANY -

CORPORATE NEWS

Xenics strengthens Marketing and Sales for future growth

05/05/2015

PRODUCT NEWS

XCO-640: Stirling Cooled MWIR Imaging Core

20/04/2015

TECHNOLOGY NEWS

Customer success story for portable border security

18/02/2015

PRODUCT NEWS

High temperature thermography research using the world's fastes SWIR camera

09/02/2015

Professional service, knowledge and advice!

Secure in Air appreciates the professional service, knowledge and advice of Xenics in implementing the Gobi camera in our project GeoCampro. Our client was more than satisfied with the results, looking for (thermal) defects in the railways.

Robert de Nes, Secure in Air

MARKETS

Research & Development
Industrial Automation
Thermography
Surveillance, Safety & Security
Modules & Components
Custom Engineering

INDUSTRIES

Mining
Surveillance, Safety & Security

SUPPORT

Contact
Frequently Asked Questions
Technology

COMPANY

About Xenics
Investors
sInfraRed

CONTACT US

Xenics nv
Ambachtenlaan 44
BE-3001 Leuven
Belgium

Contact us

T. +32 16 38 99 00
F. +32 16 38 99 01

© 2015 Xenics Disclaimer & Privacy NDA Sales Conditions

Selex ES

A Finmeccanica Company

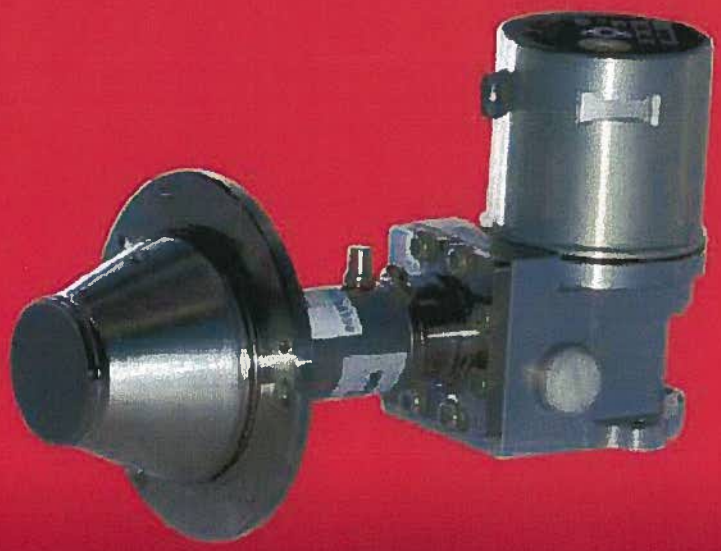

Optronics Systems

MERLIN
LONG WAVE INFRARED DETECTOR

Selex ES designs, develops and manufactures Infrared (IR) detectors at its dedicated facility in Southampton, UK. With a reputation for providing customers with the best in high performance and cost-effective technology for IR camera systems, Selex ES offers a unique level of expertise.

The Merlin Long Wave Infrared (LWIR) detector is a 1024 x 768 Mercury Cadmium Telluride (MCT) Integrated Detector Cooler Assembly (IDCA). The Merlin LWIR detector is designed for very high performance imaging in the 8 - 10μm waveband.

Using the Selex ES MCT process, the Merlin LWIR detector provides the highest environmental integrity along with the superior performance of focal plane detectors.

MAIN FEATURES

- Snapshot or interlaced operation
- Simple to use
- Long Wave (LW) 8 – 10μm
- Interlaced mode doubles charge capacity in each pixel for improved NETD
- High electro-optic performance with low crosstalk, automatic anti-blooming at the pixel level and excellent sensitivity
- Windowing gives enhanced frame rates over selected areas of the array
- Small element pitch enables miniaturisation of the Dewar assembly and optics
- Higher operating temperature than QWIPs
  - Longer cooler life
  - Less in-service support
  - Lower through-life cost
- Extremely short stare times for much less motion blur than QWIPs

KEY BENEFITS

- Low cost
- Compact
- Ultra high resolution
- High sensitivity

TECHNICAL SPECIFICATIONS

Format	
Array	1024 x 768 pixels
Pixel Pitch	16µm
Active Area	16.38 x 12.29mm

Typical Performance	
NETD (median)	32mK (23mK interlaced mode)
Pixel Operability	>99%

Interface Parameters	
Modes	Snapshot or interlaced
Configuration Control	Single serial interface
Output Voltage Range	2.5V
Charge Capacity	7 x 10^6 electrons (14 x 10^6 interlaced mode)
Number of Outputs	8
Pixel Rate	Up to 10MHz per output
Intrinsic MUX noise	50MV rms
Array Operating Temperature	Up to 90K
Nominal Operating Voltage	6V
Minimum Pins for Operation	20
Number of Input Clocks	1
Window Material	Germanium
Window Thickness	1.73mm
Cold Filter Material	Silicon
Cold Filter Thickness	0.4mm

IDCA	
Weight	<750g
Power Consumption	<10W steady state
Cooling Engine	Rotary Stirling engine
Operating Temperature Range	-40°C to +70°C

LINEAR ENGINE VARIANT	
Weight	950g
Power Consumption	<15W steady state
Cooling Engine	Linear Stirling engine
Operating Temperature Range	-40°C to +70°C

IDCA

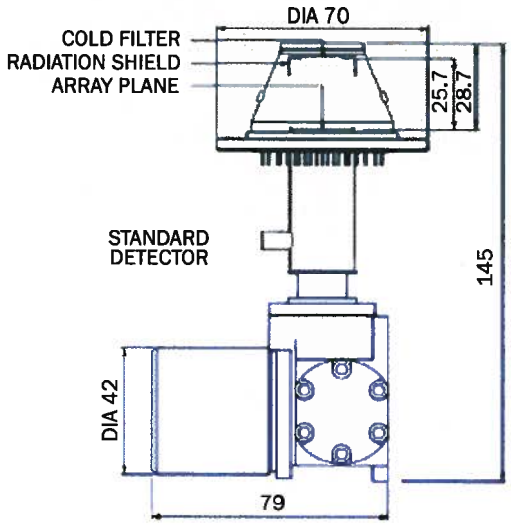

LINEAR ENGINE VARIANT

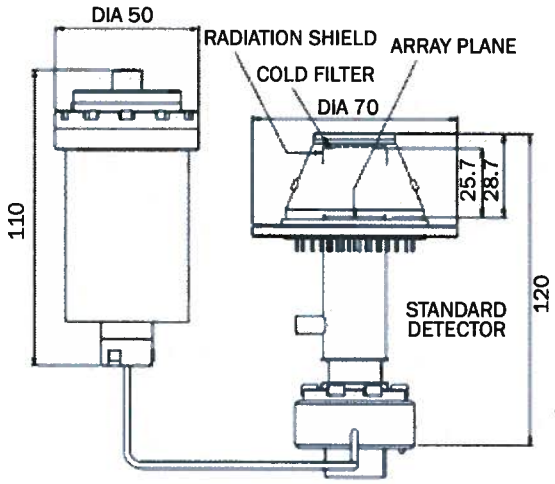

All dimensions in millimetres

For more information please email infomarketing@selex-es.com
Selex ES Ltd - A Finmeccanica Company
Millbrook Industrial Estate, Southampton, Hampshire, SO15 0LG, United Kingdom, Tel: +44 (0) 23 8070 2300, Fax: +44 (0) 23 8031 6777
This publication is issued to provide outline information only and is supplied without liability for errors or omissions. No part of it may be reproduced or used unless authorised in writing.
We reserve the right to modify or revise all or part of this document without notice.
2014 © Copyright Selex ES Ltd

Yiwu TianYing Optical Instrument Co., Limited

TianYing is the most innovative made of infrared thermal imaging camera, gyro stability thermal camera system, thermal weapon sight, laser rangefinder binoculars, and laser rangefinder module.

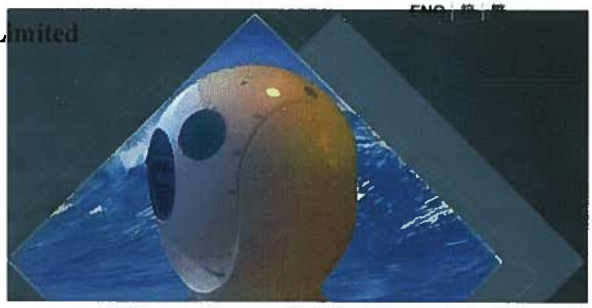

Not online QQ交谈 Call Inquiry Basket (0)

Infrared Thermal Imaging Cameras
Thermal Imaging Weapon Sight
Gyro Stability Thermal Camera Systems
Maritime Thermal Imaging Camera systems
UAV Thermal Imaging Camera system
Airborne Thermal Imaging Camera systems
Vehicle Thermal Imaging Camera systems
Thermal Imaging Camera Cores
Observing Thermal Imaging
Laser Rangefinder
Night Vision Devices
Binoculars, Riflescopes

Product Catalog > Gyro Stability Thermal Camera Systems > Maritime Thermal Imaging Camera systems

4 Axis Platform 30km 640x512 Maritime Cooled Thermal Imaging Camera System

Model No. :	EOST-3000M
Brand Name :	TianYing
Country of Origin :	China
Unit Price :	-
Minimum Order :	2 set

Inquire Now Add To Basket

Share on:

Total 3 Related Items 1 2 3

Product Description

The maritime cooled thermal imaging camera system survives in the harshest sea eavironment, auto tracking boat 30km, recognition suspect human activities up to 10km, mainly used for search and stable auto tracking task.

The system is composed by three parts: Pointer, Electronics Control Unit and Hand Control Unit. Pointer is including 640x512 30-600mm focus cooled infrared thermal imaging camera, visible light TV camera, high frequency laser rangefinder, 4 axis gyroscope stabilization turret and auto tracker. Hand Control Unit is including control key and operating lever, option display unit is included.

The maritime thermal camera system can be connected to a radar system, when the radar detects an object, the camera will automatically turn in the right direction and give you a visual image, so that you can instantly see what the blip on the radar screen really means, including fast moving objects.

EOST-3000M maitime thermal imaging camera system offer precise information and clear view, which is why TianYing Optical seeks to offer the most reliable surveillance solution. It is a fully stabilised, compactly designed surveillance system which bundles various state-of-the-art sensors. Thus, offering the user a large variety of functions comprised in only one device. EOST-3000M is available as a stand-alone unit or can be fully integrated into CMS and bridge systems.

Also it can be installed on vehicles or fixed mast for defense and security tasks.

EOST3000M 4-axis gyro stability platform 30km maritime cooled thermal camera system typical missions:
1) Maritime Patrol.
All weather surveillance, day/night long stand-off range detection, identification and tracking of naval targets.

2) Search And Rescue
All weather, day/night detection of naval units in distress and/or men at sea.

3) Coast Guard/Police Operations .
All weather, day/night detection and identification of illegal activities (immigration, smuggling, poaching, etc...).

4) Sentinel duties.
All weather, day/night support to independently perform surveillance, reconnaissance, target detection and track task when radar fails to work normally.

EOTS3000M 4-axis gyro stability platform 30km maritime cooled thermal camera system Main Features:
1) Stable 360 ° continuous turn gimble platfom with compact size and light weight.

2) High precision 4-axis gyroscope stabilization, the stabilisation accuracy: typical 20μradian .

3) High-performance 640x512 cooled thermal camera with powerful 20x optical zoom capability.

4) High-resolution, fully automatic visible light CCD camera with continuous 24x optical zoom.

5) Laser range finder with 1Hz, 2Hz, 5Hz, 20Hz continuous measureing frequency option.

6) Stable target tracking and Multi-model auto tracker.

7) Radar tracking and output target coordinate option.

8) Auto tracking boat beyond 30km, recognize suspect human activities up to 10km .

9) Capable of stand alone or integrated operations, independently perform surveillance, reconnaissance and target detection task when the radar fails to work normally.

10) Enables target detection in rough seas, supports all-weather, day or night missions, meets miliarys standard Mil-Std GJB 150 :Humidity, sand/dust, ice/freezing rain, shock, vibration,working low temperature (-40° C) and high temperature (+55 ° C).

EOST-3000M 4 axis grro stability 30km maritime thermal camera system Specification:

Model	EOST-3000M	EOST-2000M	EOST-100M
System type	4 axis stabilization	4 axis stabilization	2 axis stabilization
Azimuth range	360° continuous	360° continuous	360° continuous
Elevation range	-20° to +120°	-20° to +120°	-20° to +85°
Stabilization accuracy(RMS)	typical 20μrad	typical 10μrad	≤ 100μrad
IR thermal imager	cooled 640x512	cooled 640x512	uncooled 640x512
IR thermal imager FOV	18.3° to 0.9°	27.5° to 1.8°	6.2° x 5°
Detect human(94.5% success probability)	10km	5km	1500m
Recognize human(NATO 4347 STANAG)	6500m	3400m	1000m
Auto tracking helicopter/boat	≥30km	≥20km	≥5km
TV	Yes	Yes	Yes
Laser rangefinder	Yes	No	Option 2Hz continuous
Operating temperature	-40°C to 55°C	-40°C to 55°C	-40°C to 55°C
Environmental Standard	MIL-STD-GJB150	MIL-STD-GJB150	MIL-STD-GJB150
Weight	≤50kg	≤30kg	≤25kg

Note:
* According to NATO STANAG 4347, Detection need 1 lp/target that is 50% probability for 2°C temperature difference between target and background, Recognition need 3 lp/target, identification need 6 lp/target. Our detection human is use for 2 lp/target that is 94.5% success probability.

**Technical informantion is subject to change without notice.

EOST-3000M 4 axis gyro stability platform 30km maritime cooled thermal imaging camera system Included accessories In Standard Package:

Stabilized Three Sensor Gimbal System, Control Electronics Unit (CEU), Ergonomic Hand Control Unit (HCU), Cable Kit, Reusable shipping/storage case, Operator's Manual Kit.

Product Image

4 Axis Platform 30km 640x512 Maritime Cooled Thermal Camera System

Related Products

2 Axis Platform 5km 640x512 Maritime Thermal Imaging Camera System

4 Axis Platform 20km 640x512 Maritime Cooled Thermal Imaging Camera System

Company Address: Room 301, 1 unit, 18Building, Houcheng Yi Qu, Jiangdong Street Yiwu City,Zhejiang China. Post Code: 322000.
Telephone.:0086-579-85389306; Fax:0086-579-85380520; Mobile: 0086-13575936100(Jeny--English); 13515798545(Chinese).
Email: info@nightvisioncn.com, hawksoptics@hotmail.com, hawksoptics@gmail.com.
MSN Chat: hawksoptics@hotmail.com, Skype chat: hawksoptics, QQ Chat: 573692657.
web: http://www.nightvisioncn.com, http://m.nightvisioncn.com.

Copyright copy @ 2007 - 2015 Yiwu TianYing Optical Instrument Co., Limited. All rights reserved
Powered by DIYTrade.com

Yiwu TianYing Optical Instrument Co., Limited

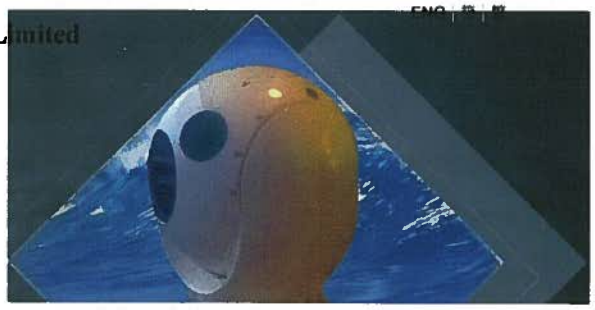

TianYing is the most innovative made of infrared thermal imaging camera, gyro stability thermal camera system, thermal weapon sight, laser rangefinder binoculars, and laser rangefinder module.

Not online QQ交谈 Call Inquiry Basket (0)

Infrared Thermal Imaging Cameras
Thermal Imaging Weapon Sight
Gyro Stability Thermal Camera Systems
Maritime Thermal Imaging Camera systems
UAV Thermal Imaging Camera system
Airborne Thermal Imaging Camera systems
Vehicle Thermal Imaging Camera systems
Thermal Imaging Camera Cores
Observing Thermal Imaging
Laser Rangefinder
Night Vision Devices
Binoculars, Riflescopes

Product Catalog > Gyro Stability Thermal Camera Systems > UAV Thermal Imaging Camera system

2 Axis Platform 640x512 75mm Lens UAV Thermal Imaging Camera System

Model No. :	EOST-210
Brand Name :	TianYing
Country of Origin :	China
Unit Price :	-
Minimum Order :	2 set

Inquire Now | Add To Basket

Share on:

Product Description

EOST-210 UAV Helicopter Thermal Imaging Camera System is a compact, lightweight, 0.04mrad stable accuracy, dual-sensor auto tracking system, designed for pursuit/patrol and surveillance missions. This model is based on the 8 inch gimbal design, configured for specific law enforcement missions.

It uses, both during night and day, a thermal imager operating in the long wavelength spectrum (8÷12μ), based on the 640x512 uncooled Focal Plane Array (FPA) detectors with 60mm or 75mm lens optics.

For day operations, including low light conditions, EOST-210 utilize a 36x zoom TV colour camera for target search. This colour high magnification, long range TV camera spotter is available for target identification,even at long distance.

EOST210 device is a high-performance sensor turret system of the lightest weight and most compact size in world, also it is the world's number one selling law enforcement multi-sensor turret system.

EOST-210 UAV thermal camera surveillance and tracking system Typical Missions:

1) Maritime Patrol.

All weather surveillance, day/night long stand-off range detection, identification and tracking of naval targets.

2) Search And Rescue.

All weather, day/night detection of naval units in distress and/or men at sea.

3) Coast Guard/Police Operations.

All weather, day/night detection and identification of illegal activities (immigration, smuggling, poaching, etc...).

4) Land Operations.

All weather, day/night support to the operation of multirole armed helicopters employed for patrol, escort or protection of ground troops.

EOST-210 UAV thermal imaging camera auto tracking system Applications:

1. Counter Drug.
2. Homeland Security.
3. Patrol.
4. Surveillance.
5. Reconnaissance.
6. Search And Rescue.

EOST-210 UAV thermal imaging camera system Main Features:

1. Compact 8 inch gimbal

2. Light weight only 10kg with dual sensors.

3. High definition color CCD camera with 36x continuous focus optical.

4. Large format 640x512 IR with 75mm lens optics or 60mm lens optics.

5. High precision 2-axis gyroscope stabilization, the stabilisation accuracy: typical 40μradian (RMS).

6. Real-time offer high quality infrared thermal image and high definition visible light image at same time

7. Multi-model auto tracker

8. Human bionics controller.

9. Simplified common interface standard

10. Supports all-weather, day or night missions, meets miliarys standard Mil-Std GJB 150 :Humidity, sand/dust, ice/freezing rain, shock, vibration,working low temperature (-40° C) and high temperature (+55 ° C).

EOST-210 UAV/helicopter thermal camera system Sepcification:

Model	**EOST-210**
System type	2 axis gryo stabilization
Azimuth range	360° continuous
Elevation range	-120° to +20°
Stabilization accuracy(RMS)	typical 40μrad
IR thermal imager.	uncooled 640x512
NETD	Typical 40mk F1.0 @ 30° C
IR lens diameter	75mm F1.0
Field of View,°, horizontal * vertical	8.3° x 6.6°
IR stadia capability(human target)	≥1000m
IR stadia capability(vehicle target)	≥2000m
Mid range TV	Yes
Laser rangefinder.	No
Auto tracking	Yes
Environmental Standard	MIL-STD-GJB150
Gimbal diameter	8 inch
Weight	10kg
Standard Package	Stabilized Gimbal Assembly, Electronics Control Unit, simplified hand control unit, standard cable kit.

Note *- Technical information is subject to change without notice. ** -Depending on the region of sale

Product Image

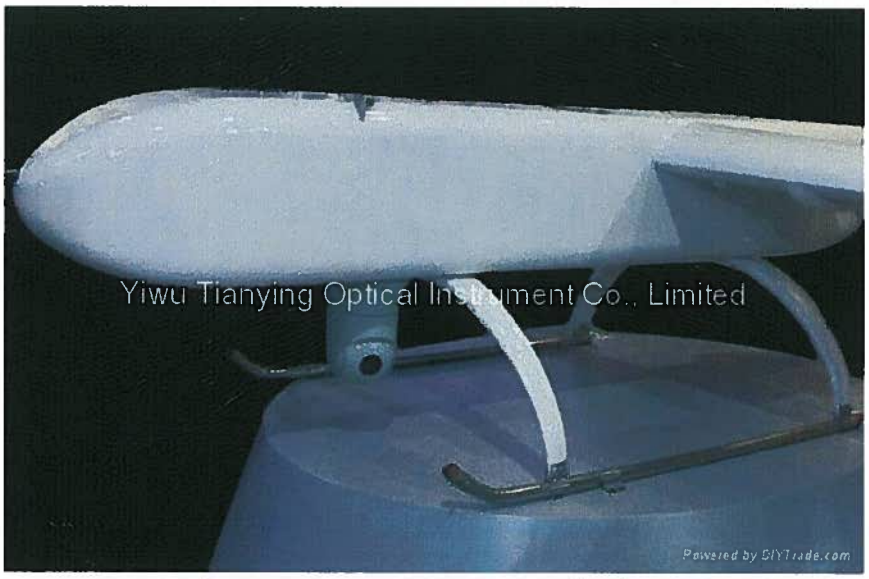

2 Axis Platform 640x512 75mm Lens 40mK UAV Thermal Imaging Camera

Company Address: Room 301, 1 unit, 18Building, Houcheng Yi Qu, Jiangdong Street Yiwu City,Zhejiang China. Post Code: 322000.
Telephone.:0086-579-85389306; Fax:0086-579-85380520; Mobile: 0086-13575936100(Jeny--English); 13515798545(Chinese).
Email: info@nightvisioncn.com, hawksoptics@hotmail.com, hawksoptics@gmail.com.
MSN Chat: hawksoptics@hotmail.com, Skype chat: hawksoptics, QQ Chat: 573692657.
web: http://www.nightvisioncn.com, http://m.nightvisioncn.com.

Copyright copy @ 2007 - 2015 Yiwu TianYing Optical Instrument Co., Limited. All rights reserved
Powered by DIYTrade.com

July 6, 2015

Department of Commerce
1401 Constitution Ave NW
Washington, DC 20230

Department of State
2201 C St NW
Washington, DC 20520

Dear Sirs/Madams:

We would like to thank the Department of State and the Department of Commerce for the opportunity to comment on the proposed changes to the US export controls relating to USML Category XII.

In reviewing the proposed rules, we strongly believe that fundamental changes are required in order to best serve the U.S., protecting national security by controlling sensitive technologies while supporting US participation in fast growing commercial markets for dual-use products.

We find that the proposed Category XII rules lack adequate control criteria and that such criteria do not exist and cannot be positively established. As detailed in Sections 1 and 2 below, we strongly urge that many rules be rewritten with "specially designed for military use" as the fundamental criteria to replace the proposed control criteria.

In addition, we suggest that the BIS companion rule is not necessary given that there is already a national security control for all items. The 600 series created in the companion rule should be eliminated or reintegrated into the USML as this creates an additional layer of regulation which serves no purpose other than to implement munition type controls at commerce.

Again, we thank the Department of State and the Department of Commerce for the opportunity to comment on these important changes and would welcome the chance to discuss these comments in greater detail should further clarification be required.

Respectfully submitted,

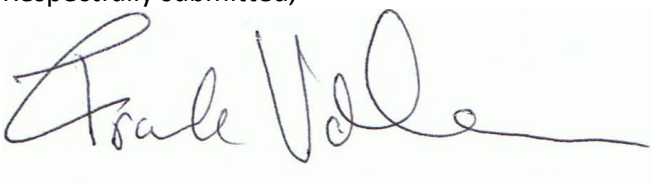

Frank Vallese, Sc.D.
President and CEO
ePhysics, LLC
www.linkedin.com/in/frankvallese/

Comments on the Proposed Changes to Export Controls for Category XII and related BIS Bookends

Contents

Overview
Recommendations
Section 1: Detailed Comments to Amendment to the ITAR, Revision of USML Category XII
Section 2: Detailed Comments to Amendment to the EAR, Revisions resulting from Category XII changes

Overview:

We appreciate the Administration's hard work to improve US export controls. These changes are needed to increase interoperability with our NATO allies, increase transparency and fairness amongst exporters, reduce incentives to avoid US content by non-US manufacturers and to focus export control resources on articles of significant concern. For Category XII articles, it is particularly challenging because the laser and sensor technologies have critical military importance as well as significant commercial application. Extra-tight U.S. export controls have had unforeseen consequences that have disadvantaged many U.S. manufacturers in the global marketplace while strengthening foreign competitors. Export Control Reform provides the opportunity to correct these errors and right-size the rules so that they not only protect our technology but also protect the health of the industry.

In reviewing the rewritten Category XII draft, we see several fundamental flaws:

1) The proposed rules do not establish a "bright line" between USML and CCL products. The proposed rules show a line that is not only improperly position but also lacking clarity concerning the jurisdiction of the articles. Control criteria (FOMs) are given that are not well-defined and have no bearing on distinguishing military use products from dual-use products.
2) In identifying certain items as the "crown jewels" of US technology to be better protected by ITAR controls, it appears that many dual-use products have inadvertently been captured as well. While the articles may have technological importance (e.g. night vision subsystems), their dual-use nature (thermal imaging systems with commercial applications) cannot be ignored. Even if those technologies are seen as critical to US defense, the availability of the technology outside the US and the significant foreign availability of related products needs to be considered before classifying them as "crown jewels" and controlling them with restrictive munitions policies, ignoring their dual-use disposition. Otherwise, by capturing dual-use items on the USML, the US government undermines the ability of US industry to adequately participate in fast-growing international commercial markets, whereby they may leverage increased production to decrease costs and fuel further technological development. This is unilateral control and has adverse consequences.
3) In the proposed rules, the US has labeled certain articles as USML or CCL 600 Series (with ITAR-like control) even though they are controlled as dual-use items by our Wassenaar partners and classified on the Wassenaar Dual-Use List. This is inconsistent with the intended ECR goal to increase interoperability with NATO and other close allies. Without a level playing field amongst the US and its allies, US products will be avoided because of their inconsistent level of control when compared to other countries.

In the following two sections, specific comments, suggestions and requests for clarification on the proposed rules are provided. The detailed comments refer to those proposed rules that are felt to require updating. Each includes a short statement of the issue with the proposed rule's language, a discussion or reasons supporting the issue and recommendations.

Recommendations:

We strongly support export control reform relating to USML Category XII. Yet, we believe that the proposed rules require fundamental change in order best serve the U.S., protecting national security and controlling sensitive technologies while supporting US participation in fast growing commercial markets for dual-use products.

We find that the proposed Category XII rules lack adequate control criteria and that such criteria do not exist and cannot be positively enumerated. As detailed in Sections 1 and 2 below, we strongly urge that many rules be rewritten with "specially designed for military use" as the fundamental criteria to replace the proposed control criteria.

In addition, we suggest that the BIS companion rule is not necessary given that there is already a national security control for all items. The 600 series created in the companion rule should be eliminated or reintegrated into the USML as this creates an additional layer of regulation which serves no purpose other than to implement munition type controls at commerce.

Section 1: Detailed Comments to Amendment to the ITAR, Revision of USML Category XII
http://www.regulations.gov/#!documentDetail;D=DOS_FRDOC_0001-3226

Comment 1 Section: XII(a)(9)

Issue: This text could capture hands-free thermal imaging cameras which are actively being developed for firefighting applications. These hands-free thermal imaging cameras have been available in the past. For example, FireFLIR, a product introduced by FLIR, and a helmet-mounted device by Cairns. Newer models are expected to have infrared cameras mounted to the helmet with the HMD attached to the breathing apparatus.

Recommendation: Revise the proposed rule to: "Helmet mounted display (HMD) systems or equipment *specially designed for military use*, incorporating optical sights or slewing devices, which include the ability to aim, launch, track, or manage munitions, or control infrared imaging systems or equipment, other than such items controlled in Category VIII, (e.g., Combat Vehicle Crew HMD, Mounted Warrior HMD, Integrated Helmet Assembly Subsystem, Drivers Head Tracked Vision System)."

Comment 2 Section: XII(c)

Issue: The section (c) title is confusing. "Infrared focal plane arrays, image intensifier tubes, night vision, electro-optic, infrared and terahertz systems, equipment and accessories, including cameras and cores, as follows:". It includes physical items (e.g. "image intensifier tubes"), applications (e.g. "night vision") and generic classifications (e.g. "electro-optic"?).

Recommendation: Choose a more generic category title that is clear and balanced.

Comment 3 Section: XII(c)(2)

Issue: Should the rules separately consider packaged and unpackaged IRFPAs?

Discussion: Regarding the separate consideration of packaged and unpackaged IRFPAs, there does not appear to be a large market today for unpackaged IRFPAs. So, the point seems rather moot. In addition, I believe a clarification is required for devices that incorporate the package in the detector manufacturing process, such as wafer-level-packaging and pixel-level-packaging. With the motivation to build smaller devices with lower cost, innovative technologies will likely be introduced and so the distinction needs to be clarified.

Recommendation: Modify the text to clarify how devices are controlled when the packaging is incorporated into the IRFPA.

Comment 4 Section: XII(c)(3)

Issue: The number of detector elements is not a criteria that delineates dual-use and military use encapsulated one-dimensional photon detector IRFPAs.

Reasons:

1) The detector is a dual-use device. Common commercial applications include: dense wavelength division multiplexing (DWDM), remote sensing (vegetation, clouds, humidity, atmospheric conditions), wild fires, radiometry.
2) The pixel count constraint has no specific military significance.
3) These are listed on the Wassenaar "Sensitive List of Dual-Use Goods and Technologies" and not on the Wassenaar "Munitions List". Listing dual-use items on the USML will result in unilateral control of US-made devices and is not consistent with the intent of the Wassenaar Agreement for export controlled devices.
4) There are foreign available dual-use products, for example:
    a. Xenics Xlin-17-3000 (http://www.xenics.com/en/xlin-17-3000)

b. Hamamatsu (http://www.hamamatsu.com/jp/en/product/category/3100/4005/4208/4121/index.html)

Recommendation: Revise the proposed rule to: "One-dimensional photon detector IRFPAs described in paragraph (c)(2) of this category in a permanent encapsulated sensor assembly~~, *having greater than 640 detector elements*~~ *and specially designed for military use;*"

Comment 5 Section: XII(c)(4)

Issue: The number of detector elements is not a criteria that delineates dual-use and military use encapsulated two-dimensional photon detector IRFPAs.

Reasons:

1) The detector is a dual-use device.
2) The pixel count constraint has no specific military significance.
3) These are listed on the Wassenaar "Sensitive List of Dual-Use Goods and Technologies" and not on the Wassenaar "Munitions List". Listing dual-use items on the USML will result in unilateral control of US-made devices and is not consistent with the intent of the Wassenaar Agreement for export controlled devices.
4) There are foreign available dual-use products, for example:
    a. Xenics XFPA-1.7-640-LN2 (http://www.xenics.com/en/xfpa-17-640-ln2)
    b. Hamamatsu (http://www.hamamatsu.com/jp/en/product/category/3100/4005/4208/4121/index.html)
    c. Chunghwa Telecom (http://www.leadinglight.com.tw/images/Large%20format%20FPA%20spec.pdf)
    d. SCD (http://www.scd.co.il/SCD/Templates/showpage.asp?DBID=1&LNGID=1&TMID=108&FID=1287&IID=1682)

Recommendation: Revise the proposed rule to: "Two-dimensional photon detector IRFPAs described in paragraph (c)(2) of this category in a permanent encapsulated sensor assembly~~, *having greater than 256 detector elements*~~ *and specially designed for military use*;"

Comment 6 Section: XII(c)(5)

Issue: The use of array size to identify those encapsulated microbolometer IRFPAs that are for military use is not appropriate. Encapsulated microbolometer IRFPAs having more than 328,000 detector elements are dual-use and commonly used in commercial applications.

Reasons:

1) The detectors are dual-use devices. Commercial applications include: commercial automotive vision, UAVs, security, thermography, scientific research.
2) Constraining the array size has no specific military significance.
3) These are listed on the Wassenaar "Sensitive List of Dual-Use Goods and Technologies" and not on the Wassenaar "Munitions List". Listing dual-use items on the USML will result in unilateral control of US-made devices and is not consistent with the intent of the Wassenaar Agreement for export controlled devices.
4) There are foreign available dual-use products, for example:
    a. ULIS PICO-1024 (http://www.ulis-ir.com/index.php?infrared-detector=gen2pico1024)
    b. SCD Bird-XGA (http://www.scd.co.il/Bird-XGA-17)

Recommendation: Revise the proposed rule to: "Microbolometer IRFPAs described in paragraph (c)(2) of this category in a permanent encapsulated sensor assembly~~, *having greater than 328,000 detector elements*~~ *and specially designed for military use*;".

Comment 7 Section: XII(c)(7)

Issue: The use of an array dimension to identify those charge multiplication FPAs that are for military use is not appropriate or consistent with their use. Charge multiplication FPAs having greater than 1,600 elements are commonly used in commercial applications and must be treated as dual-use.

Reasons:

1) The detectors are dual-use devices. Commercial applications include: enhanced underwater imaging, life science imaging applications (such as single molecule detection, live cell fluorescence microscopy, ion signaling and weak luminescence detection), photon counting, adaptive optics, single molecule detection, neutron tomography, Raman detection.
2) Constraining the array dimension has no specific military significance.

Recommendation: Revise the proposed rule to: "(7) Charge multiplication focal plane arrays ~~having greater than 1,600 elements in any dimension and having a maximum radiant sensitivity exceeding 50 mA/W for any wavelength exceeding 760 nm but not exceeding 900 nm, and avalanche detector elements therefor;~~ *specially designed for military use*;".

Comment 8 Section: XII(c)(8)

Issue: Encapsulated charge multiplication FPAs are dual-use devices commonly used in commercial applications.

Reasons:

1) The detectors are dual-use devices. Commercial applications include: enhanced underwater imaging, life science imaging applications (such as single molecule detection, live cell fluorescence microscopy, ion signaling and weak luminescence detection), photon counting, adaptive optics, single molecule detection, neutron tomography, Raman detection.
2) These are listed on the Wassenaar "Sensitive List of Dual-Use Goods and Technologies" and not on the Wassenaar "Munitions List". Listing dual-use items on the USML will result in unilateral control of US-made devices and is not consistent with the intent of the Wassenaar Agreement for export controlled devices.

Recommendation: Revise the proposed rule to: "(8) Charge multiplication focal plane arrays described in paragraph (c)(7) of this category in a permanent encapsulated sensor assembly, ~~and avalanche detector elements therefor;~~ *and specially designed for military use*;".

Comment 9 Section: XII(c)(9)

Issues: This section does not adequately capture only the IDCA-based IRFPA detectors that are designed for military use.

Reasons:

1) Some cooled IDCA-based IRFPA detectors that are specially designed for dual-use products would be captured by this rule. For example, those detectors that are designed for use in the following gas imaging cameras are designed exclusively for dual-use products and are inadvertently captured by this rule:
    a. IR Cameras Niatros (http://www.ircameras.com/camera/niatros-optical-gas-imager/)
    b. FLIR Gas FindIR (http://www.flir.com/ogi/display/?id=55671)
    c. Opgal Eye-C-Gas (http://www.opgal.com/portals/0/pdf/eyecgas_27.11.2012_small.pdf)
2) The following criteria are not related to the military use of this technology:
    a. cooling source temperatures below 218K
    b. mean-time-to-failure (MTTF) in excess of 3000 hours
    c. "active cold fingers" (Note: The term "active cold finger" is not common terminology and seems to be used only in export control papers. I believe that the meaning here is to

identify those cold fingers that are not passively cooled with liquid nitrogen or compressed gases. It may be better in the future to specific "non-passively cooled".)

3) Some cooled IDCA-based IRFPA detectors are listed on the Wassenaar "Sensitive List of Dual-Use Goods and Technologies" and not on the Wassenaar "Munitions List". Listing dual-use items on the USML will result in unilateral control of US-made devices and is not consistent with the intent of the Wassenaar Agreement for export controlled devices.

Recommendation: Revise the proposed rule to:

"(9) Integrated IRFPA dewar cooler assemblies (IDCAs), with or without an IRFPA, having any of the following:

(i) Variable or dual aperture mechanisms; or

(ii) Dewars specially designed for military use;"

<u>Comment 10</u> <u>Section: XII(c)(12)</u>

Issue: The listing of "Infrared imaging camera cores" in the title is confusing, is too broad in scope and includes terms that can be interpreted in different ways.

Reason:

1) This section includes more than just cores with infrared detectors. For example, the first option lists an image intensifier tube as a possible component, yet image intensifier tubes are not components of "Infrared imaging camera cores".
2) In order to prevent capturing many dual-use products, the title needs to be limited to constraint products specially designed for military use.
3) The title lists "electronics and optics" without being very specific about the nature of those items. For example, were they designed for military use only?

Recommendation: Revise the header for section (12) to: "(12) ~~Infrared i~~Imaging camera cores (*e.g.,* modules, engines, kits)~~, and specially designed electronics and optics~~ *specially designed for military use and* ~~,~~having any of the following:". Move optics, electronics and accessories to Xii(e).

<u>Comment 11</u> <u>Section: XII(c)(12)(i)</u>

Issue: This rule inadvertently captures dual-use intensified cameras that are designed for commercial applications such as scientific imaging.

Reasons:

1) The cameras are dual-use devices. The commercial applications for this intensified cameras include: fluorescence lifetime imaging microscopy, time-resolved imaging & spectroscopy, plasma diagnostics, combustion, planar laser induced fluorescence and particle imaging velocimetry.
2) Imposing military-level export controls on a dual-use camera is not justified simply because it contains an image intensifier tube.
3) As with other dual-use items, these items are controlled on the Wassenaar "Sensitive List of Dual-Use Goods and Technologies" and not on the Wassenaar "Munitions List". Listing dual-use items on the USML will result in unilateral control of US-made devices and is not consistent with the intent of the Wassenaar Agreement for export controlled devices.
4) There are foreign available dual-use products, for example:
    a. Andor iStar 512T (http://www.andor.com/scientific-cameras/intensified-camera-series)
    b. Photonic Science (http://www.photonic-science.co.uk/products/intensified-ccd-cameras.html)
    c. LaVision Nanostar (http://www.lavision.de/en/products/cameras/iccd_cameras.php)

Recommendation: Revise the header of section (12) to consider only products "specially designed for military use" and revise the proposed rule to: "(i) An image intensifier tube ~~described in paragraph (c)(1) of this~~;".

Comment 12 Section: XII(c)(12)(ii)

Issue: The shock criteria listed are poorly defined and are not exclusive to military products. This rule inadvertently captures dual-use microbolometer cameras.

Reasons:

1) The definition for maximum shock is not sufficient to fully define the constraint. For example, what is meant by "Output imagery"? Can the image flicker? How much? How can the 325 g of force be applied? What is the permissible shock profile?
2) Many commercial applications require dual-use microbolometer cameras to sustain shock. For example, some are used in an industrial setting and must withstand a 6' drop from a ladder. In a firefighting application, the thermal imager is used by the firefighter in very harsh conditions.
3) Constraining a camera based on the fact that it withstands a briefly defined shock rating is not sufficient to justify military significance.
4) As with other dual-use items, these items are controlled on the Wassenaar "Sensitive List of Dual-Use Goods and Technologies" and not on the Wassenaar "Munitions List". Listing dual-use items on the USML will result in unilateral control of US-made devices and is not consistent with the intent of the Wassenaar Agreement for export controlled devices.

Recommendation: Remove the proposed rule XII(c)(12)(ii).

Comment 13 Section: XII(c)(12)(iii)

Issue: The number of detector elements is not a criteria that delineates dual-use and military use microbolometer IRFPAs.

Reasons:

1) There are dual-use cameras that are captured by this rule. Applications for dual-use cameras include: portable thermography, industrial and scientific R&D, predictive and preventive maintenance, building inspection.
2) Constraining the pixel count has no specific military significance.
3) As with other dual-use items, these items are controlled on the Wassenaar "Sensitive List of Dual-Use Goods and Technologies" and not on the Wassenaar "Munitions List". Listing dual-use items on the USML will result in unilateral control of US-made devices and is not consistent with the intent of the Wassenaar Agreement for export controlled devices.
4) There are foreign available dual-use products, for example:
    a. Jenoptik IR-TCM-HD-1024 Thermography Camera Module (http://www.jenoptik.com/en-ir-tcm-hd-1024)
    b. Jenoptik VarioCAM HD Thermography Camera (http://www.jenoptik.com/en-variocam-high-definition-thermography-camera)
    c. Thermoteknix MicroCAM 1024 Thermal Imager (http://www.thermoteknix.com/products/oem-thermal-imaging/microcam-1024hd-thermal-imager/)

Recommendation: Revise the header of section (12) to consider only products "specially designed for military use" and revise the proposed rule to: "(iii) A microbolometer IRFPA;". If the products are limited to military use items only, no criteria limiting performance of the microbolometers used need to be stated.

Comment 14 Section: XII(c)(12)(iv)

Issue: This rule inadvertently captures some dual-use camera cores that use IDCAs.

Reasons:

1) There are dual-use cooled cameras that are captured by this rule. Applications for dual-use cooled cameras include: gas imaging, hyperspectral imaging, spectroscopy.
2) Constraining the camera simply because it uses a cryocooled IDCA has no specific military significance.
3) As with other dual-use items, these items are controlled on the Wassenaar "Sensitive List of Dual-Use Goods and Technologies" and not on the Wassenaar "Munitions List". Listing dual-use items on the USML will result in unilateral control of US-made devices and is not consistent with the intent of the Wassenaar Agreement for export controlled devices.
4) There are foreign available dual-use products, for example:
    a. Opgal Eye-C-Gas (http://www.opgal.com/portals/0/pdf/eyecgas_27.11.2012_small.pdf)
    b. Telops Hyper-Cam Methane (http://www.telops.com/en/hyperspectral-cameras/hyper-cam-methane)

Recommendation: Revise the header of section (12) to consider only products "specially designed for military use" and revise the proposed rule to: "(iv) An IDCA or IDCA parts or components described in paragraph (e)(7);". If the products are limited to military use items only, no criteria limiting performance of the IDCAs used need to be stated.

Comment 15 Section: XII(c)(12)(v)

Issue: This rule lists unencapsulated one-dimensional photon detector IRFPAs.

Reasons:

1) I'm not familiar with any product that uses an unencapsulated detector without first encapsulating it.

Recommendation: Seems like an unnecessary addition.

Comment 16 Section: XII(c)(12)(vi)

Issue: This rule lists unencapsulated two-dimensional photon detector IRFPAs.

Reasons:

1) I'm not familiar with any product that uses an unencapsulated detector without first encapsulating it.

Recommendation: Seems like an unnecessary addition.

Comment 17 Section: XII(c)(12)(vii)

Issue: This rule inadvertently captures some dual-use camera cores that use one-dimensional photon detector IRFPAs.

Reasons:

1) There are dual-use infrared linescan cameras that are captured by this rule. Applications for linescan cameras include: portable thermography, industrial and scientific R&D, predictive and preventive maintenance, building inspection. Here are some examples of dual-use cameras that are captured by the rule:
    a. Sensors Unlimited (http://www.sensorsinc.com/products/linescan-cameras/)
2) Constraining products based on the pixel count has no specific military significance.
3) As with other dual-use items, these items are controlled on the Wassenaar "Sensitive List of Dual-Use Goods and Technologies" and not on the Wassenaar "Munitions List". Listing dual-use items on the USML will result in unilateral control of US-made devices and is not consistent with the intent of the Wassenaar Agreement for export controlled devices.
4) There are foreign available dual-use products, for example:
    a. Xenics Lynx-1024-CL (http://www.xenics.com/en/camera/lynx-1024-cl)

Recommendation: Revise the header of section (12) to consider only products "specially designed for military use" and revise the proposed rule to: "(vii) A one-dimensional photon detector IRFPA;". If the products are limited to military use items only, no criteria limiting performance need to be stated.

Comment 18 Section: XII(c)(12)(viii)

Issue: This rule inadvertently captures some dual-use camera InGaAs cores that use two-dimensional photon detector IRFPAs.

Reasons:

1) There are dual-use infrared InGaAs cameras that are captured by this rule. Applications for dual-use InGaAs cameras include: spectroscopy, semiconductor inspection and DWDM optical performance monitoring. Here are some examples of dual-use cameras that are captured by the rule:
    a. Sensors Unlimited Mini SWIR (http://www.sensorsinc.com/products/detail/mini-swir-jsx-snapshot-camera-60-fps)
    b. FLIR Tau SWIR (http://www.flir.com/cores/display/?id=51890)
2) Constraining products based on the pixel count has no specific military significance.
3) As with other dual-use items, these items are controlled on the Wassenaar "Sensitive List of Dual-Use Goods and Technologies" and not on the Wassenaar "Munitions List". Listing dual-use items on the USML will result in unilateral control of US-made devices and is not consistent with the intent of the Wassenaar Agreement for export controlled devices.
4) There are foreign available dual-use products, for example:
    a. Xenics BobCat 640 (http://www.xenics.com/en/bobcat-640-gige)
    b. Raptor Owl 640 (http://www.raptorphotonics.com/product/owl-640-analog-33)
    c. SCD InGaAs 640 (http://www.scdusa-ir.com/ingaas/)

Recommendation: Revise the header of section (12) to consider only products "specially designed for military use" and revise the proposed rule to: "(viii) A two-dimensional photon detector IRFPA ~~described in paragraph (c)(2) or (4) of this category~~ having a peak response within the wavelength range exceeding 900 nm but not exceeding 2,500 nm~~, and greater than 111,000 detector elements~~;". If the products are limited to military use items only, no criteria limiting performance need to be stated.

Comment 19 Section: XII(c)(12)(ix)

Issue: This rule inadvertently captures some dual-use camera cooled cores that use two-dimensional cooled IDCAs.

Reasons:

1) There are dual-use infrared research cameras and certain gas-imaging that are captured by this rule. Applications for infrared research cameras include: Non-destructive testing, high-speed imaging of dynamic events, gaseous cloud studies. Applications for gas-imaging cameras include: methane emissions monitoring, leak detection, pollution monitoring, flare measurement, standoff emission characterization of smokestacks. Here are some examples of dual-use cameras that are captured by the rule:
    a. FLIR GF300/320 Infrared Cameras (http://www.flir.com/ogi/display/?id=55671)
    b. Sofradir EC IRE-320M Camera (http://www.thermal-cameras.com/th-mwirs.html)
2) Constraining products based on the pixel count has no specific military significance.
3) As with other dual-use items, these items are controlled on the Wassenaar "Sensitive List of Dual-Use Goods and Technologies" and not on the Wassenaar "Munitions List". Listing dual-use items on the USML will result in unilateral control of US-made devices and is not consistent with the intent of the Wassenaar Agreement for export controlled devices.

4) There are foreign available dual-use products, for example:
    a. Xenics Onca-LWIR-MCT-384 (http://www.xenics.com/en/onca-lwir-mct-384)
    b. Telops TX-IR (http://www.telops.com/en/infrared-cameras/ts-ir-thermal-scientific-ir-camera)

Recommendation: Revise the header of section (12) to consider only products "specially designed for military use" and revise the proposed rule to: "(ix) A two-dimensional photon detector IRFPA ~~described in paragraph (c)(4) of this category~~ having a peak response within the wavelength range exceeding 2,500 nm but not exceeding 30,000 nm;". If the products are limited to military use items only, no criteria limiting performance need to be stated.

Comment 20 Section: XII(c)(12)(xi)

Issue: The term "IRFPA" should be excluded from this description.

Reasons: The FPAs mentioned in XII(c)(7) and XII(c)(8) are not IRFPAs.

Recommendation: Revise the header of section (12) to consider only products "specially designed for military use" and revise the proposed rule to: "A charge multiplication FPA controlled in paragraph (c)(7) or (c)(8) of this category".

Comment 21 Section: XII(c)(13)(ii)

Issue: This rule inadvertently controls firefighting cameras and thermography cameras.

Reasons:

Recommendation:

Comment 22 Section: XII(c)(14)(iii)

Issue: This rule captures large format perimeter security cameras and their optics which are dual-use articles.

Reasons:
    a. Large format cameras are often used to monitor wide areas and so controlling them here is ineffective.
    b. In addition, multiple cameras would accomplish the same function as one high definition camera.

Recommendation: Revise the header of section (12) to consider only products "specially designed for military use" and revise the proposed rule to: "(iii) Fixed-site reconnaissance, surveillance or perimeter security systems or equipment *specially designed for military use* ~~having greater than 640 detector elements in any dimension~~;".

Comment 23 Section: XII(c)(14)(iv)

Issue: This rule captures large format perimeter security cameras with zoom optics which are dual-use articles.

Reasons:
    a. Large format cameras are often used to monitor wide areas and so controlling them here is ineffective.
    b. In addition, multiple cameras would accomplish the same function as one high definition camera.

Recommendation: Revise the header of section (12) to consider only products "specially designed for military use" and revise the proposed rule to: "(iv) Combat vehicle, tactical wheeled vehicle, naval vessel, or aircraft pilotage systems or equipment *specially designed for military use and* having a variable field of view or field of regard (*e.g.,* electronic pan or tilt), and either an IRFPA article controlled in this subchapter with greater than 640 detector elements in any dimension, or an IIT controlled in this category (*e.g.,* DAS, DVE, SeaFLIR, PNVS);".

Comment 24 Section: XII(c)(16)

Issue: Seeks to control as ITAR any optics that are designed for high definition infrared cameras [section XII(c)(16)(iii)] and high definition infrared cameras with zoom lenses [section XII(c)(16)(iv)].

Reasons: Infrared optics are normally designed for diverse commercial applications. Optics designed for military use normally have additional requirements. It is inadvisable to control all these infrared optics on the USML if they are designed for less stringent commercial applications.

Recommendation: Control only those infrared optics that were designed for military use.

Comment 25 Section: XII(c)(18)

Issue: Seems that these near-to-eye display are accessory items adequately covered in XII(e)(12).

Reasons:

Recommendation: Remove this rule.

Comment 26 Section: XII(c) Note 1 to paragraph (c)

Issue: Though unrealistic, the requirement "A permanent encapsulated sensor assembly (e.g., sealed enclosure, vacuum package) prevents … without destruction or damage to the IRFPA" is one that, with enough expense and motivation, may be able to be overcome. As such, the distinction between an unencapsulated and encapsulated sensor assembly may be irrelevant even though impractical. If the motivation to control unencapsulated IRFPAs is to more easily control the technology behind the IRFPA, it seems unnecessary to have such a demanding constraint. In addition, this constraint does not exist for dual-use non-US IRFPAs, so why should US manufacturers be encumbered with the cost and development of tamper resistant methods when we have agreed that our Wassenaar partners do not have the same requirement?

Recommendation: Remove Note 1 to paragraph (c).

Comment 27 Section: XII(c) Note 2 to paragraph (c)

Issue:

1) This note does not create a "bright line" between circumstances that meet the requirement and those that do not.
2) The parameter "having greater than 640 detector elements in any dimension" is not exclusive to military use.
3) Image intensifiers do not necessarily have "pixels", so including (c)(1) is incorrect.
4) The requirement that the items "… cannot be removed without destruction or damage to the article or render the item inoperable" does not define "damage" or "inoperable". For example, if the article's paint is scratched, is it damaged? If so, then it's a trivial requirement.
5) Why is there a constraint on removal of the item when most of these IRFPAs are available from foreign sources?
6) It is not practical to have such a requirement for products sold commercially as service and repair will be very costly. Implementing in accordance with this rule will make US companies uncompetitive and will encourage using non-US devices by foreign end-customers.
7) It may be possible but impractical to remove the item without destruction or damage.
8) These constraints are not placed on items listed on the Wassenaar Dual-Use List and consequently result in unilateral control of US-made devices which is not consistent with the intent of the Wassenaar Agreement for export controlled devices.

Recommendation: Dual-use end products need to be controlled as dual-use. However, distribution of articles that contain munitions items need to be export controlled and acceptance should

demand certain evaluation of the end-customer and security of the article. Remove Note 2 to paragraph (c).

Comment 28 Section: XII(e)(7)

Issue: "Cryocoolers having a cooling source temperature below 218K and a mean-time-to-failure (MTTF) in excess of 3000 hours" pertains to dual-use items and should not be controlled in this section unless they are specially designed for military use.

Reasons: Foreign availability for cryocoolers used in various civil applications. For example:

1) Ricor K508 (MTTF 10,000 hours): http://www.ricor.com/products/integral-rotary/k508/

Recommendation: Use specially designed for military use to capture any uniquely military cryocoolers.

Comment 29 Section: XII(e)(9)

Issue: "Infrared lenses, mirrors, …" are normally dual-use items and should not be controlled in this section unless they are specially designed for military use.

Reasons: Foreign availability of IR optics within and outside of Wassenaar

1) Z&Z Optic, China: http://www.zzoptic.com/
2) Ophir Optics, Israel: http://www.ophiropt.com/
3) Wavelength Tech, Singapore: http://www.wavelength-tech.com/

Recommendation: Use specially designed for military use to capture any uniquely military optics and remove from the companion rule references to 6A615 which impose unilateral controls on US suppliers.

Comment 30 Section: XII(e)(11)(ii)

Issue: Fusion is useful in dual-use articles. Check that items are not controlled in this section unless they are specially designed for military use. Also, be more specific about which sensors are being fused (e.g. visible and IR)?

Reasons: Foreign availability of fusion algorithms and systems. For example:

1) Xenics, http://www.xenics.com/en/meerkat-fusion

Recommendation: Use specially designed for military use to capture any uniquely military algorithm or electronics fusion approaches. The statement "to improve classification, identification, or tracking of targets relative to any of the individual sensors is too broad.

Section 2: Detailed Comments to Amendment to the EAR, Revisions resulting from Category XII changes
http://www.regulations.gov/#!documentDetail;D=BIS-2015-0016-0001

Comment 1 Section: 740.16 Availability of License Exemption APR

Issue: Cameras described in ECCN 6A003 may only be exported or re-exported under License Exception APR if they have no more than 111,000 elements (among other factors). It makes no sense to inflict the limitation on the number of elements when the articles are embedded in civil products.

Reasons:

1) Such a constraint could adversely impact civil applications that require additional array size.
2) Multiple lower resolution cameras positioned together could achieve the same performance. Consequently, the limitation has no real performance impact.
3) These items are controlled freely on the Wassenaar Dual-Use List. Encumbering US products will result in unilateral control of US-made devices and is not consistent with the intent of the Wassenaar Agreement for export controlled devices.

Recommendation: Remove the pixel count constraint entirely.

Comment 2 Section: 744.0 Revision to require a license for 9 Hz cameras

Issue: Apparently 744.9 is to be revised to require a license for 9 Hz cameras if exported to a "military end user" or if incorporated into a "military commodity".

Reasons: If the article wasn't designed specifically for military use, then this seems to establish a control requirement that is inappropriate. While the article may have military applicability, because of significant commercial use, the item is essentially commoditized. Encumbering US manufacturers would impose restrictions that are neither fair nor are easily managed.

Recommendation: Maintain the sanctity of <9Hz camera cores.

Comment 3 Section: ECCN 6A615c

Issue: The section ECCN 6A615c seeks to control "certain zinc selenide, zinc sulfide, germanium, or chalcogenide optics blanks." Though it's not clear, it seems likely (and should be clarified) that this rule also controls the lenses that are made from the blanks. This is absurd as many of the infrared lenses are designed for non-military applications.

Reasons: Encumbering US lens manufacturers with these export controls will undermine their participation in US markets. Significant foreign availability exists for infrared lenses outside the US (including Israel, Germany, China, The Netherlands and Japan) and would certainly fulfil the market need.

Recommendation: Control only those lenses that were designed for military use or use materials (such as AMTIR4) that may only be used in military applications.

Comment 4 Section: ECCN 6A615g

Issue: The section ECCN 6A615g section g captures IR zoom lenses used on cooled cameras ("…equipment incorporating a variable field of view or field of regard, and incorporating a photon detector-based infrared focal plane array having less than 640 elements"). Many infrared lenses are designed for non-military applications.

Reasons: Encumbering US lens manufacturers with the same export controls for both military and commercial products when significant foreign availability exists is not appropriate.

Recommendation: Control only those lenses that were designed for military use or use materials (such as AMTIR4) that may only be used in military applications.

#5

PUBLIC SUBMISSION

As of: 6/25/15 2:05 PM
Received: June 25, 2015
Status: Pending_Post
Tracking No. 1jz-8jmg-xgxa
Comments Due: July 06, 2015
Submission Type: Web

Docket: BIS-2015-0016
Revisions to the Export Administration Regulations (EAR): Control of Fire Control, Range Finder, Optical, and Guidance and Control Equipment the President Determines No Longer Warrant Control Under the United States Munitions List (USML)

Comment On: BIS-2015-0016-0001
Export Administration Regulations: Control of Fire Control, Range Finder, Optical, and Guidance and Control Equipment that No Longer Warrant Control under the U.S. Munitions List

Document: BIS-2015-0016-DRAFT-0005
Comment on FR Doc # 2015-10353

Submitter Information

Name: Paul McManamon
Address:
4161 Spruce Pine ct
Dayton, OH, 45424
Email: paul@excitingtechnology.com
Phone: 937-344-3921

General Comment

See attached file(s)

Attachments

Cat XII Commentsv1

[Email Directly To: *DDTCPublicComments@state.gov*]

[Subject Line, "ITAR Amendment—Category XII."]

Office of Defense Trade Controls Policy
Department of State
2401 E Street NW, SA-1, Room H1200
Washington, DC 20037

Subject: Amendment to the International Traffic in Arms Regulations: Revision of U.S. Munitions List Category XII

My company is called Exciting Technology LLC, but my comments are mostly my own. I also am part time Technical Director for LOCI, the Ladar and Optical Communications institute. I am advising two Phd students and one masters student. I spent 40 years working for the United States Air Force. When I retired I was chief scientist for the sensors directorate, Air Force Research Laboratory. My protocol equivalent was that of a 1 star general officer. Since retiring I was vice chair of the "Seeing Photons", the National Academy of Sciences, NAS, study on passive EOIR detectors and receivers, published in 2010. I was co-chair of the Optics and Photonics: Essential Technologies for our Nation" NAS study that resulted in a fast track White House study to respond to our recommendations. I was chair of the "Laser Radar" NAS study published in 2014. Laser Radar is equivalent to Lidar and Ladar. Many of my comments result for the fact that each of these NAS studies were asked to compare the state of the art in the United States against the SOA in of the rest of the world. Therefore in Passive EO/IR Sensors, any optical systems, and in active EO/IR sensors I have been responsible within the past 5 years for comparing US SOA vs. the rest of the world SOA.

I will make comments as I go through the proposed cat 12 regulations. Because the active EO sensing study was more recent, and many of my comments are similar for active and passive sensors, I will focus my comments on the active EO sensors. I think a substantial revision of this Cat 12 work is required. As currently structured it expands the wall around exports, in contrast to my understanding of the direction. In my opinion this will hurt both US industry and the US military. For the NAS studies I have chaired it is obvious our export restrictions have not keep technology expertise in the United States, but have caused the United Sates to lose its lead in many technical areas. With respect to passive EO systems I recommend those involved with this effort read "Seeing Photons: Progress and Limits of Visible and Infrared Sensor Arrays", published by the NAS in 2010. With respect to Active EO systems I recommend those involved read "Laser radar" Progress and opportunities in Active Electro-optical Sensing", published by the NAS in 2014. For active EO systems I also recommend my Field Guide to Lidar book.

a (2)
i: "An infrared focal plane array having a peak response at a wavelength exceeding 1,000 nm"

This rule obviously dramatically expands the area covered by ITAR in direct contradiction of the guidance that caused the Cat 12 revision. There are a wide variety of FPAs commercially available with a wavelength response above 1000nm. While I could quote probably 100 products commercially available with response over 1000 nm just look on the internet. We certainly have uncooled FPAs. We have the NIR FPAs, many of which are available from overseas companies. Most of the product line of SOFRADIR in France would be covered by this restriction.

a (4) "Laser spot trackers or laser spot detection, location or imaging systems or equipment, with an operational wavelength shorter than 400 nm or longer than 710 nm, and a detection range greater than 300 m"

b (2) "Aiming or target illumination systems or equipment having a laser output wavelength exceeding 710 nm;

For both of the above areas I do not see the rational for restricting these wavelengths.

b (3) Laser rangefinders having any of the following:

(i) Q -switched laser pulse; or

Q switched lasers are very common around the world. I think this restriction will hurt US industry compared to the rest of the world, and will indirectly hurt the US military because they will end up having to buy their systems overseas rather than from US suppliers.

(ii) Laser output wavelength exceeding 1,000 nm

Lasers with output exceeding 1000 nm are very common around the world. Same comment on hurting US industry and the US military.

(5) Systems or equipment that use laser energy with an output wavelength exceeding 710 nm to exploit differential target - background retroreflectance in order to detect personnel or optical / electro -optical equipment (e.g., optical augmentation systems);

I am not sure I can think of a commercial use for OA systems, so this might be okay even though the wavelength restriction does not make a lot of sense based on state of the art around the world.

(6) Light detection and ranging (LIDAR), laser detection and ranging (LADAR), or range-gated systems or equipment, incorporating or specially designed to incorporate an article controlled in this subchapter (MT if designed or modified for rockets, missiles, SLVs, drones, or unmanned aerial vehicle systems capable of delivering at least a 500 kg payload to a range of at least 300 km Note to paragraph (b)(6) :This paragraph does not control LIDAR systems or equipment for civil automotive applications having a range limited to 200 m or less

Lidar is being used around the world. It is correct that auto lidar is one of the larger coming uses. Exempting any auto lidar is a good thing. There are also widespread 3D mapping lidars. OPTEC (Canada) and Riegl (Germany) are two of the largest manufacturers. Due to ITAR controls it is not surprising the US does not have a larger manufacturer of 3D lidar. The Microsoft connect is a short range gaming system that is widespread and is essentially a lidar. Wind sensing lidars are sold world wide.
The US military has a definite need for 3D mapping systems. Continuing to discourage 3D mapping commercial lidar technology in the United States, as this paragraph does because 3D mapping technology will be beyond 200 meters, will hurt the US military.

(7)
"Synthetic aperture LIDAR or LADAR systems or equipment, having a stand - off range of 100 m or greater "

This shows a lack of understanding of what is critical in a synthetic aperture lidar. The max range of the lidar is mostly controlled by the power of the laser. More powerful lasers are widely available. Germany probably has the lead. If this line item talked about how many times better the SAL's resolution is than the diffraction limit of its real receive aperture size, or than the r_0 of the atmosphere, then this could make sense. Something like 10 times better resolution then the diffraction limit of the receive aperture, and/or 10x the diffraction limit of an aperture with a diameter equal to r_0 might make sense.

(8)
LIDAR, LADAR, or other laser range -gated systems or equipment,
as follows (MT if designed or modified for rockets, missiles, SLVs, drones, or unmanned aerial vehicle systems capable of delivering at least a 500 kg payload to a range of at least 300 km):
(i) Systems or equipment having a resolution (i.e., ground point spacing) of
0.2 m or less (better) from an altitude above ground level of greater than 16,500 ft , and incorporating or specially designed to incorporate a gimbal - mounted transmitter or beam director, and specially designed parts and components therefor

(ii) Aircraft systems or equipment having a laser output wavelength
exceeding 1,000 nm and a detection range exceeding 500 m for an obstacle with a diameter or width less than or equal to 10 mm (e.g.,wire, power line);

(iii) Systems or equipment having an electrical bandwidth of 100 MHz or
greater, and incorporating or specially designed to incorporate either a Geiger - mode detector array having at least 32 elements or a linear- mode detector array having at least 128 elements;

Could a Geiger mode auto-lidar have 32 or more elements, or could a linear mode auto lidar have more than 128 elements? I know from discussions with one large auto manufacturer that they will avoid any technology that has ITAR related entanglements.

It likely the full GMAPD arrays will be more expensive then auto companies want anyway, but if you could at least double these values it would increase the chances US companies could compete in the auto lidar area. For US companies to compete in 3D mapping I think you would have to allow them to use a 32 x 32 GMAPD or a 128 x 128 LMAPD, although they might be able to compete with smaller arrays. 3D mapping will want better than 5 foot range resolution, so the 100 Mhz limitation will catch 3D mappers. It would be very desirable if 3D mapping lidar develop could be encouraged in the United Sates, rather than being discouraged.

(14) Developmental lasers and laser systems or equipment funded by the Department of Defense

This is a huge expansion of the ITAR restrictions that will really hurt the US military, assuming I am right in interpreting this to say as soon as a laser company takes any DOD funding to work on a laser then that laser is caught by ITAR. This means a company cannot accept any DOD funding for lasers it is developing primarily for commercial application. It has to strictly divide its product line into military and non-military lasers. DOD will not be able to leverage commercial investment in lasers if this line stays. The Navy is currently putting laser weapons on ships as a trial, but the lasers were developed for commercial use. I wonder if the navy would be allowed to do this if this line holds. IPG might refuse to sell the lasers to DOD. Certainly their commercial business is much larger, and more profitable, than their military business.

PUBLIC SUBMISSION

As of: 7/1/15 10:16 AM
Received: June 30, 2015
Status: Pending_Post
Tracking No. 1jz-8jq0-umcm
Comments Due: July 06, 2015
Submission Type: API

Docket: BIS-2015-0016
Revisions to the Export Administration Regulations (EAR): Control of Fire Control, Range Finder, Optical, and Guidance and Control Equipment the President Determines No Longer Warrant Control Under the United States Munitions List (USML)

Comment On: BIS-2015-0016-0001
Export Administration Regulations: Control of Fire Control, Range Finder, Optical, and Guidance and Control Equipment that No Longer Warrant Control under the U.S. Munitions List

Document: BIS-2015-0016-DRAFT-0007
Comment on FR Doc # 2015-10353

Submitter Information

Name: Erick Koontz
Address:
6296 E. Grant Rd.
Suites #110 & #150
Tucson, AZ, 85712
Email: erick.koontz@fisba.com
Phone: 5208678100 x103
Organization: Fisba LLC

General Comment

I am writing in regards to the proposed additions to 6A615, specifically the terminology used for definition of item "c".

The proposed changes includes: "Zinc selenide, zinc sulfide, germanium or chalcogenide optics blanks, being flat or initially curved"

I will be commenting specifically on the chalcogenide material listed, but the same idea applies to all the materials in "c".

The term "optics blanks" is not well defined, in the industry, optics blank would be taken to mean a specific precursor shape cut out of raw material for the purpose of later manufacturing it into a final optical element of some kind. However, the raw material in the case of

chalcogenides is referred to as a "boule" in the industry. This listing is unclear whether the "as-melted" chalcogenide material of whatever shape would be included under the heading of "optical blank". Chalcogenide boules are typically made in diameters of up to 5 inches and lengths of similar values. However, at the boule stage there is no optical function to the raw material although its general size attributes may be in the same range as those enumerated in 6A615 Items c.1-c.4.

An argument exists to exclude raw material boules from this restriction because they are generally not "specifically designed" for any final optical blank of a given size. They are simply the standard raw material boule size, defined by the melting process more than by the end use of the material.

If boules of raw material are indeed included in this proposed restriction, the effect to U.S. glass makers and subsequent manufacturers of optics for both commercial and defense purposes will be detrimental.

Restrictions on glass blanks specifically designed to service defense needs are well intentioned and proper. However, restriction of "as-melted" glass boules would put severe restrictions on U.S. glass makers selling their product abroad. IR materials and chalcogenides in particular have a wide range of uses in commercial markets, and the number of chalcogenide optics in the market is ever increasing. Restrictions on unshaped boules of chalcogenide glass would put unnecessary restriction on US glass makers as well as optical companies utilizing this glass. These restrictions would serve to stifle US technological and commercial development in a growing and vital market.

July 2, 2015

Regulatory Policy Division
Bureau of Industry and Security
U.S. Department of Commerce
Washington, DC 20230
Email To: publiccomments@bis.doc.gov

Subject: Revision to EAR Related to the ITAR Category XII Proposal, RIN 0694-AF75

Dear Sir/Madam,

FLIR Systems, Inc. (FLIR) is providing this document in response to the proposed revision of the Export Administration Regulations (EAR) to accommodate the draft proposal for Category XII of the ITAR. FLIR is a world leader in the design, manufacture, and marketing of sensor systems that enhance perception and awareness. FLIR's advanced thermal imaging and threat detection systems are used for a wide variety of imaging, thermography, and security applications, including airborne and ground-based surveillance, condition monitoring, research and development, manufacturing process control, search and rescue, drug interdiction, navigation, transportation safety, border and maritime patrol, and environmental monitoring. FLIR has annual revenues of approximately $1.5B with over half of that revenue generated by sales outside of the U.S. The EAR revisions and Category XII of the United States Munitions List (USML) have the potential to have a significant negative impact on the sales of FLIR's products that are in normal commercial use.

This document will address most of the major sections of the proposed EAR revisions as FLIR designs, manufactures, and markets a wide variety of products that are based on technology that could be controlled under the EAR.

TOP LEVEL COMMENT

As part of the Administration's Export Control Reform (ECR) Initiative, the rewrite of USML category XII and the companion revisions to the EAR was to establish a "bright line" between items on the USML and the Commerce Control List (CCL) by describing more precisely the articles warranting control on the USML. The objective of ECR is to protect and enhance US national security interests which includes strengthening the US industrial base. Taken together however, the proposed revision of USML Category XII and the related EAR changes would place items in normal commercial use on the USML and impose greater restrictions on items on the CCL. Over-control, as proposed in the two rules, will provide incentive for foreign customers to seek foreign, rather than US products. In the short term this reduces US control and visibility over commercial products that have potential military applications. In the long term, over-control can diminish the US night vision/thermal imaging industrial base by effectively limiting foreign markets, thereby weakening, rather than strengthening the US industrial base.

The Export Control Reform (ECR) initiative was launched with the expressed purpose of building higher walls around fewer items. This was meant to focus resources toward the most significant technologies, while enhancing our industrial base by reducing incentives for foreign manufacturers to "design-out" US-origin components in order to avoid ITAR (i.e., incorporation of ITAR components change the nature of foreign manufactured end-items from dual-use to US ITAR controlled). The ECR also had the expressed purpose of setting straightforward guidelines that would not take a team of lawyers to understand. This proposed rule is

considerably more complex than the current rule and even more expansive. In Flir's experience, US Government export regulations have driven high-tech jobs abroad and have weakened US company's ability to compete in the global marketplace. In contrast to all the other revised categories, these proposed rules do not move lower-level items that are clearly military to the CCL. Instead, they explicitly propose to place items that are in normal commercial use on the USML and impose more restrictive controls on the items proposed to remain on the CCL.

FLIR is greatly concerned that the proposal for Category XII does not reflect the expressed purpose of the ECR. The proposed draft for Category XII fails for several reasons as listed below.

- Commercial markets dominate sales of many technologies described in the Category XII draft
- Foreign availability is not adequately considered
- Actual military items are not specified in the proposal.

Therefore, FLIR recommends that these proposed rules be fundamentally rewritten after thorough and sincere collaboration with stakeholders among industry, USG, and research institutes. Now that there is a definition of "specially designed," use of this as a control parameter would be a simple and effective way to implement the principle of ECR in USML Category XII and the corresponding revisions to the EAR. If the USG continues to seek to identify technical parameters for the revised USML and EAR, using "specially designed" as the principle would achieve the ECR objectives. The broad criteria proposed are based on limits of today's commercial performance for these items rather than defining parameters of military significance. The proposal for Category XII would regulate companies to performance parameters that are simply at the edge of today's commercial market, as opposed to defining parameters of military sensitive items. The proposed approach allows for no future growth in these rapidly advancing technology areas in commercial and consumer markets. Furthermore, it will disincentivize investment by U.S. companies in emerging technology and markets.

Moreover, the proposed revisions to the USML and the EAR are inconsistent with the controls in the Wassenaar Arrangement. The USML should also align with the internationally agreed upon Wassenaar Munitions List. Commodities and components not specially designed for military purposes or on the Wassenaar Dual-Use List should be controlled under the Commerce Control List (CCL). Though still controlled under the CCL, the list controlled by the Department of Commerce allows for more flexibility on how controls are applied, and can adjust to conditions more quickly than items under the USML. EAR controls that are more restrictive than the Wassenaar Dual-Use List and the license-free treatment of Wassenaar Dual-Use items within the European Union and other allied trading partners, will further disadvantage US companies for the smaller portion of the commercial market proposed for the CCL under these rules.

This proposed EAR companion rule is equally confusing and difficult to navigate. Certain articles have greater restrictions applied without apparent logic (6A002 items have more restrictions than 6A003 items). This proposed rule places excessive increased controls on exports of dual-use products to Canada, which is a radical departure from the vast majority of items subject to the EAR. Placing greater restrictions on license exceptions such as STA, APR, and TSR is in direct conflict with the ECR objectives and result in the need to obtain more export licenses. There are numerous changes that mostly increase controls and complicate the process.

These proposed rules are not simplifying the regulations and in fact, this will be a boon to the trade compliance legal community as it will be very difficult to gain an understanding of these changes and implement process changes without specialized legal consultation. It will be particularly burdensome for small businesses as they attempt to understand the rules and may not have the resources to hire the required specialized trade compliance legal experts. This will result in demotivating companies from entering global markets and has a spiraling effect to weaken US companies and strengthen foreign competitors.

Request For Comments (note: the questions are shortened in the responses below)

The Public Notice document requested input on nine questions. Following are responses to those questions.

1) ***The Public is asked to identify any potential lack of coverage between the Wassenaar ML (W-ML) and Wassenaar Dual-Use List (W-DUL) as a result of the Category XII (Cat XII) proposal.***

RESPONSE: FLIR is not aware of any areas that lack coverage that need to be controlled.

2) ***The Public is asked to identify any items proposed for control on the USML that are not controlled on the Wassenaar ML or DUL.***

RESPONSE: Readout Integrated Circuits (ROICs) as described in the proposed CAT XII sections (e)(4) and (e)(5) are not controlled on the W-ML or the W-DUL. In 2012, the Sensors and Instrumentation Technical Advisory Committee (SITAC) provided comments on a draft USG Wassenaar proposal to control ROICs. A copy of the 2012 SITAC comments is attached as Exhibit A.

3) ***The Public is asked to provide examples of control criteria that do not establish a bright line between the USML and the CCL.***

RESPONSE: There are multiple examples with specific information in FLIR's response to DDTC's request for comments on the Category XII proposed rule that identify the lack of a bright line between USML and CCL items. The current CCL controls, implementing the W-DUL, clearly identify items subject to the EAR.

4) ***The stated goal of Export Control Reform (ECR) is to only control items on the ITAR that are not in normal commercial use or to assure that only items that provide the U.S. government with a critical military or intelligence advantage. The Public is asked to provide specific examples of commercial use as well as data related to foreign availability of such items.***

RESPONSE: FLIR's response to DDTC's request for comments on the Category XII proposed rule provides numerous examples of items listed in CAT XII that are in commercial use and available world-wide.

a. Lasers covered in paragraph (b)
b. Cooled and Uncooled focal plane arrays, cameras incorporating cooled and uncooled focal plane arrays, IRFPA integrated dewar cooler assemblies (IDCAs), Gimbals, cameras (with no shock specification), Binoculars, imaging systems, cryo-coolers, optics, electronic assemblies, ROICs and many more items.

5) ***The Public is asked to identify parameters that are unique to military users.***

RESPONSE: Where applicable or possible, military performance parameters were identified in FLIR's response to DDTC's request for comments on the CAT XII proposed rule. However, there is a basic flaw with the proposed language in trying to identify military parameters on items that are inherently dual-use. For example, infrared focal plane arrays (IRFPA) are typically designed to a general performance standard and it isn't until the IRFPA is installed into a higher-level system that the militarization occurs. The same IRFPA may be installed in a commercial thermography camera that is also installed into a thermal weapon sight.

6) ***The Public is asked to comment on the consequences of controlling items on the USML when they are also controlled on the W-DUL.***

RESPONSE: This document and FLIR's response to DDTC's request for comments on the CAT XII proposed rule addresses the foreign availability of many of the items listed on the proposed CAT XII. Later in this document it will be explained that IRFPA technology is widely available world-wide including from credible manufacturing facilities located in the EU, Middle East, and Asia (including China). Further, third party market data will be shown that demonstrates that commercial applications for uncooled products outnumber military applications by 4 to 1 world-wide. Additionally, market research data identifies that over half of all cooled detectors and products are produced outside of the U.S.

It is no surprise that given a choice for equal performance, that non-US camera and system manufacturers will choose to integrate dual-use products manufactured outside of the U.S. over products that are ITAR controlled. Many non-US manufacturers of products that incorporate IRFPAs advertise their products as "ITAR-FREE". This situation places U.S. manufacturers of thermal imaging components and systems at a distinct disadvantage in the ability to compete in the global market place. Figure 1 shows the significant number of non-U.S. manufacturers of uncooled detectors that have entered the market over the last decade. These Non-U.S. detector manufacturers have relatively quickly developed manufacturing capability and are producing advanced technology.

Figure 1 **The Number of Foreign UFPA Production Manufacturing Facilities Is Increasing Dramatically**

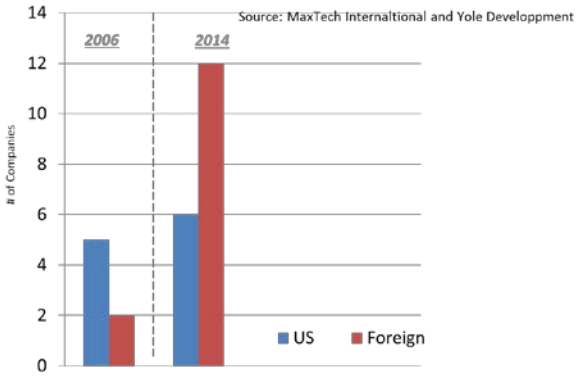

The Number and technical sophistication of foreign UFPA manufacturers has increased and will continue to do so as foreign firms take advantage of ITAR export restrictions on U.S. manufacturers. Figure 2 is a table showing by country, Microbolometer IRFPA technology currently being manufactured.

Figure 2 Companies Producing Microbolometer IRFPAs

		Number of Companies Producing Microbolometer IRFPAs							
						Source: MaxTech International			
	U.S	Japan	Israel	China	Canada	France	Germany	Korea	Turkey
Material Type									
Vanadium Oxide (VOx)	5	1	1	2	2				
Amorphous Silicon (a-Si)	1			2		1	1		
Silicon-on-Insulator (SOI)		2						1	
Titanium Oxide (TiOx)								1	
Various Uncooled Technologies				1				1	1
	6	3	1	5	2	1	1	3	1

The data represented in figures 1 and 2 clearly illustrate substantial capability outside the US. This demonstrates that treating comparable US items as USML will not be effective in seeking to "own the night." [1]

7) ***The Public is asked to comment on weapon shock load and packaged focal plane array criteria described in the USML Category XII draft.***

RESPONSE:

A) The Weapon Shock Load language attempts to restrict the use of a camera with greater than 111,000 detector elements (pixels) from being used for a weapon sight. The concern is that insufficient technical parameters have been identified and that there has been no consideration of foreign availability.

1) The military weapon shock specification for a thermal weapon sight is much more involved than the few parameters listed. This link represents the type of requirements for a military thermal weapon sight as specified for the Squad Thermal Sight (STS) system. https://www.fbo.gov/index?s=opportunity&mode=form&id=d8a51751cb529883b80cb9203299fb1a&tab=core&tabmode=list&= Extensive design, testing, and validation must be accomplished in order for a camera to survive the harsh environment of a thermal weapon sight. The STS solicitation is a common example of requirements for cameras integrated into thermal weapon sights and highlights the need for items to be "specially designed" for military applications in order to be considered.

   a. There are commercial requirements for cameras to survive the shock load that results from normal use of a camera. It is common for consumer thermography and industrial cameras to have a requirement to survive a 2 meter drop test. Underwriter Laboratories (UL) has requirements for consumer and industrial products to survive shock as a result of drop tests. http://ulstandardsinfonet.ul.com/tocs/tocs.asp?fn=0294.toc
   b. Consumer point and shoot cameras and cell phones have shock specifications that exceed the 325g shock load specified in this draft. For example, the Panasonic FT2 consumer camera is tested to MIL-STD 810F Method 516.5- for Shock http://www.dpreview.com/articles/9043332764/panadmcft2#specs. There are many consumer point and shoot cameras on the market that have been ruggedized to meet the needs of adventure seekers.
   c. Thermal imaging cameras (TIC) used for civil firefighters must survive a 2 to 5 meter drop which generate a shock load between 600g's to 1,500g's. NFPA 1801 provides the rigorous testing required for TICs. http://www.nfpa.org/codes-and-standards/document-information pages?mode=code&code=1801 Manufacturers of these systems find that the environmental protections that allow survival of drop tests or extreme heat experienced by firefighters, occurs at the system level. Significant design and testing is required for these cameras to meet the NFPA requirements.

2) There is significant foreign availability of Microbolometer IRFPA imaging cameras that exceed the shock specification as well as the 111,000 pixel limit. Figure 3 lists a sample of cameras

[1] "Owning the Night" is a long-standing motto of the US Army Night Vision and Electronic Sensors Directorate

available from non-US manufacturers. Numerous manufacturers in the EU produce cameras with 786,000 pixels. Further, there are camera manufacturers in Asia (including China), the EU, the Middle East that commercially provide cameras that exceed the 111,000 pixel count without regard to a shock load specification.

Figure 3 Microbolometer IRFPA Cameras Available From Non-US Sources

Model	MFG	Country	Detector Type	Format	Web Link
CX640	COX	S. Korea	Uncooled	640x480	http://coxcamera.com/products/cx320cx640/
CX600	COX	S. Korea	Uncooled	640x480	http://coxcamera.com/products/cx300cx600cx1000/
TC640	ULIRvision	China	Uncooled	640x480	http://ulirvision.en.alibaba.com/product/1708476949-221296359/Thermal_Imaging_Core_TC640.html
SMIR 11X	Sunma IR Tech	China	Uncooled	640x480	
ATOM 1024	Sofradir EC	US/France	Uncooled	1024x768	http://www.electrophysics.com/DbImages/SofEC-Atom1024-v23.pdf
MicroCAM 1024 HD	Thermotecknix	UK	Uncooled	1024x768	http://www.thermoteknix.com/products/oem-thermal-imaging/microcam-1024hd-thermal-imager/
IR-TCM1024	Jenoptik	Germany	Uncooled	1024x768	http://www.jenoptik.com/en-ir-tcm-hd-1024
IR121D	Guide	China	Uncooled	640x480	http://www.wuhan-guide.com/en/Products/CVS/255.aspx
JIR-UL-623	Xi'an Gatherstar	China	Uncooled	320x240	
D-840 - module	Dali	China	Uncooled	640x480	http://translate.google.com/translate?hl=en&sl=zh-CN&u=http://www.dali-tech.com/products/d840-122.html&prev=search
UTCC640	Beijing Hamilton	China	Uncooled	640x512	http://hamilton-tech.company.weiku.com/item/Uncooled-thermal-camera-core-640-13582768.html
HX3220i 640x480/12	NEC	Japan	Uncooled	640x480/12	
EyeR 640	Opgal	Israel	Uncooled	640x480	http://www.opgal.com/DEFENSE/DefenseProducts/ThermalCores/EyeR64017u.aspx
Thermcore 121	Guide Infrared	China	Uncooled	640x480	http://www.wuhan-guide.com/en/Products/CVS/255.aspx
XTM 640	Xenics	Belgium	Uncooled	640x480	http://www.xenics.com/en/xtm-640

3) This requirement will be a significant deterrent for US companies competing in international markets. Camera customers will be concerned that the drop shock will result in fragile cameras that can't be used in normal commercial/industrial use.

RECOMMENDATION: The approach taken in Category XV of the ITAR is a logical approach. Products must be designed, rated, tested or advertised to be considered military. The military does not purchase products without validation and certification of environmental design and implementation standards. During the CAT XV review it was agreed that designing and building to military standards must be intentional and it was acknowledged that these requirements are significant cost drivers.

B) Package/encapsulated IRFPA as a military control parameter.

ISSUE: The concept of a permanent encapsulated sensor assembly is 1) not well defined and 2) is not a bright line parameter to distinguish an ITAR item from a CCL item.

IRFPAs are packaged using various methods depending on the type of detector. Microbolometer IRFPAs/detectors are typically packaged in a sealed vacuum device. Photon detector IRFPAs may be packaged in different methods depending on many factors. A photon detector may eventually become packaged in a sealed vacuum assembly however; those steps have little to do with whether the device is military in nature. It's not clear why the "permanent encapsulated sensor assembly" is used as a military parameter. One can speculate that the USG is concerned about either reverse engineering of

IRFPAs, diversion of IRFPAs, or both.

Permanent encapsulation will not eliminate reverse engineering by an entity that is knowledgeable, funded and motivated. However, reverse engineering is a concern for all technologies and companies such as FLIR institute extensive measures to protect intellectual property.

The motivation to purchase a camera assembly with the purpose to remove the IRFPA for diversion into a military system isn't practical. The availability of IRFPAs world-wide and the extra cost of purchasing a camera to harvest the IRFPA then dispose of the camera assembly isn't cost effective or practical on any type of a large scale basis. It is possible that there might be a one-off situation where an IRFPA is removed from a commercial camera, but it is unlikely to occur in volume.

In summary, FLIR is concerned that the encapsulation of an IRFPA is being used as a distinguishing parameter for a military item, which has no bearing on its military utility. Further, we are concerned that the definition of a permanent encapsulation sensor assembly is not sufficiently defined.

RECOMMENDATION: Remove this packaging concept as criteria for distinguishing a military item and add language that CAT XII will control FPAs specially designed for military applications.

8) ***BIS seeks comments on the proposed increase of controls on items, as described in this rule, that are currently exportable without a license or under a license exception.***

RESPONSE: Placing additional controls on the technology covered by this regulation further restricts the ability of US manufacturers from competing in the global market. Almost every section of the Category XII proposal lists products and technology that are available from non-US sources. Refer to FLIR's submittal related to DDTC's request for comments on Category XII for the details and examples of the foreign availability issue.

Placing additional controls on items that are in commercial use and available from non-US sources is in direct conflict with the ECR guiding principles. The consequences of controlling technology more strictly than our Wassenaar partners or competitors in the rest-of-the-world (ROW) will be devastating to the US manufacturing base. OEMs will continue sourcing systems and components from companies that are not encumbered by overly restrictive US export controls.

Performance is rapidly improving and commercial manufacturing techniques are greatly reducing manufacturing costs and reducing prices for most of the technologies addressed in Category XII. Much of this innovation is driven from commercial demand rather than military requirements. As an example and as shown in Figures 1 and 2, a growing number of commercial manufacturers of microbolometer IRFPAs are non-US companies. Placing additional restrictive controls on US manufacturers of dual-use technology will have the unintended effect of strengthening non-US companies at the expense of US manufacturers. Overseas customers will avoid overly restrictive US export controls by turning to those offshore producers; US producers will lose economies of scale, and in the end America's military will become dependent on non-US sources for this vital technology. The US Satellite and LCD industries are examples of exactly this situation occurring which resulted in the product development and manufacturing efficiencies and expertise moving outside of the US.

Currently, US companies are competing for commercial markets using technology with restricted performance compared to non-US competitors. For example, FRN Vol. 70, 136 / July 15, 2005 created a

regulation that allowed cameras with less than or equal to nine (9) frames per second (aka 9hz) to be exported under National Security 1 (NS1) rules. The concept behind this rule was that cameras operating at 9hz or slower would not likely be used for military purposes due to the negative impact to the video output. FLIR has found this premise to hold true; FLIR does not manufacture any military products that incorporate 9hz cameras. There are always a few outlier examples where a 9hz thermal weapon sight might be advertised on a web site however, that is not a typical situation. Thermal weapon sights developed by the US DOD require much faster frames rates than 9 Hz. While the 9hz rule is important because it allows US companies to offer products to commercial markets, US companies find that they are competing against non-US companies which are able to provide higher performance products that operate at 30hz or 60hz. It takes focused marketing to convince a customer to purchase a product with lower performance for similar prices as higher performing products from non-US companies. US companies have been at a great disadvantage competing with performance constrained products. i.e., the 9hz performance limitation.

It is a significant disappointment that the CAT XII and accompanying EAR proposals would consider placing stricter controls on technology that is widely available world-wide. The data in figures 1 and 2 tell the story; The US once was the sole source for this thermal imaging technology and now the US is outnumbered by non-US manufacturers of the core technology. While currently a US company is the largest producer of Microbolometer IRFPAs, a French company is the second largest producer. Additionally, US industry is significantly concerned by the demonstrated rapid advancement by several Chinese companies in developing production quantities of quality IRFPAs in a relatively short time. Further constraining US companies from competing globally and maintaining technology leadership is an incomprehensible proposal that will seriously compromise, rather than enhance, US National Security.

9) ***BIS seeks comments on the impact of the proposed controls on the export to Canada of items described in this rule.***

RESPONSE: The first impact is that the Canadians are extremely offended and are asking questions about why such controls are proposed. Apparently, the Canadian Government is contacting Canadian companies and seeking information about impact to their business as a result of this additional control. It's not clear that this rule was thoroughly vetted since there are scenarios where hardware and technical data for defense articles can be provided under the USML Canadian Exemption, but similar data for non-military items will require an export license from BIS.

OTHER OBSERVATIONS AND COMMENTS

ECCN 6A002. There appears to be a "death by dual-use determination" scenario woven into this proposed language. Recently several commodity jurisdiction (CJ) determinations have correctly determined that dual-use optical sensors are not subject to the ITAR. ECCN 6A002, implementing the W-DUL, controls these sensors. Additionally, the CAT XII draft also acknowledges that some Microbolometer IRFPAs are appropriately controlled by the EAR. However, the proposed EAR language appears to be an attempt to place highly restrictive controls on these dual-use items to make a dual-use classification undesirable. In addition, it appears that the proposed more restrictive controls on ECCN 6A002 would be more restrictive than controls on ITAR parts and components under the Canadian exemption.

a. Imposing world-wide Regional Stability (RS) controls on this entire ECCN results in many new license requirements, including obtaining an export license to ship products to Canada. Additionally, there are many other complicated dissections of the regulations

that, depending on material type and detector function, are so overly complicated that it will require specialized legal analysis to understand the impact and also to develop an internal compliance plan.

b. Removing of STA eligibility will result in the need to obtain additional export licenses for exports to our closest allies. STA was developed as a method to allow US companies to compete globally, support US allies, and reduce the time and cost (for both industry and the USG) associated with obtaining export licenses.
c. Expanded restrictions on APR. This also is an exception designed to allow the transfer of items within the A:1 country group. The proposed language will require obtaining export licenses where most other ECCNs are able to utilize this exception.
d. The language in 744.9 related to end-use/user requirement is expanded to make it almost impossible for a US exporter to confidently certify to an end-use statement.

COMMENT: This proposed language is very restrictive and not conducive to supporting commercial sales of these dual-use products. US manufacturers will be further restricted from competing globally and non-US IRFPA manufacturers will continue to grow their market share.

ECCN 6A003: Many of the same comments as made on 6A002 apply to this ECCN. The language is complicated and will require detailed legal expert analysis. However, it is clear that the intent of this language is to place additional restrictive controls on US manufacturers of articles controlled by this ECCN. In particular, this is true of the proposed revisions to 744.9, ECCN 0A919, and license exceptions APR and STA.

740.16(b)(3) describes a provision that is known as the Uncooled Thermal Imaging Camera (UTIC) rule. The UTIC rule is the result of a Memorandum of Understanding (MOU) between BIS and Defense Technology Security Administration (DTSA) that was implemented around 2008. The UTIC rule allows the export of 6A003b.4.b cameras with less than 111,000 pixels to EU+ countries without obtaining an export license. Apparently, the MOU has a provision that allows for expanding the pixel criteria depending on technology advancement, commercial and foreign availability.

RECOMMENDATION: Following are recommendations related to UTIC.

a. Based on data in Figure 3 and also provided by FLIR's response to the CAT XII proposal, the pixel count should be increased to 800,000 pixels (1024x768). Microbolometer IRFPAs are available on a commercial basis from non-US manufacturers.
b. The language that states "fully packaged for use as consumer ready civil products" is unclear. This language should be replaced with the definition of camera which is found as Note 1 to 6A003.b.

ECCN 6A990: FLIR's response to the CAT XII rule provides extensive evidence that supports EAR99 control for ROICs designed for 6A002.a.3 focal plane arrays. As demonstrated by that evidence, which is incorporated by reference in these comments, the controls proposed for this ECCN are overly restrictive considering that these devices are available world-wide.

RECOMMENDATION: Remove these proposed added controls.

6A615 Military fire control, range finder, and optical, equipment, and "specially designed" "parts," "components," "accessories," and "attachments," as follows (See List of Items Controlled).

b. Gimbals permanently configured to contain a single payload consisting of a camera operating exclusively in the visible spectrum (i.e., 400 nm to 760 nm) and having a minimum root-mean-square (RMS) stabilization better (less) than 35 microradians.

The draft CAT XII proposes to move these articles to the EAR only if a non-removable single "visible spectrum" payload is installed in the gimbal. Further, the EAR proposes to control these commercial items as ITAR items moved to the EAR. However, these gimbals should be treated as commercial items with no military capability. The CAT XII language will control television broadcast cameras installed in gimbals used for traffic monitoring or movie filming. Interchangeability of cameras is a common requirement and avoids the need for a filming company or local news channel from acquiring multiple gimbal systems rather than a system with interchangeability options. There are commercially available systems from non-US companies which have interchangeable cameras and that are not controlled on the Wassenaar DUL or the Wassenaar ML.

1) Dynamic Perspective, Broadcast platforms Switzerland http://dynamicperspective.com/dynax5/overview/
2) SWESystems, Broadcast platforms Sweden. http://www.swesystem.se/broadcast.html
3) Shotover, 6-axis stabilized platforms, New Zealand. Advertise "NO ITAR or EAR Controls" http://www.shotover.com/k1

Controlling these articles as 600-series articles is not logical and will only overlay excessive controls on commercially available and commercially used articles.

RECOMMENDATION: remove these articles from 6A615 and classify as EAR99 items.

ECCN 6D002 and 6D003: These added restrictions will greatly impede FLIR's ability to support the sales, service, and repair requirements demanded by non-military end-users. This condition will impede FLIR's ability to provide normal software updates that fix bugs, add commercial features and otherwise update an operating system without adding capability. It is unclear whether License Exception TSU would still be available for such exports, and if so, that it would address all of these scenarios.

ECCN 6E001, 6E002, and 6E990: These added restrictions will greatly impede FLIR's ability to work with customers who purchase 6A002 and 6A003 articles. Certain technical data related to operation of systems, mechanical and electrical interface control documentation, and simple assembly is often required. TSR is a common exception that is critical to supporting FLIR non-US operations as well as non-US customers. Moreover, the proposed 740.2(a)(7) restriction for 6E002 would prohibit use of other license exceptions, including even GOV for USG users.

ECCN 6D991, 6D994, 6E994 and 0E987: FLIR has an extensive network of service centers world-wide. The proposed restrictions for 6D994 and 6E994 will require obtaining export licenses for items that have historically been treated as EAR99. This will essentially shutdown FLIR's ability to service our products outside of the US, and ultimately close down service centers that have been in operation for decades. This will also add to the number of export licenses that must be analyzed and processed by BIS.

ECCN 0A919: The restrictions placed by this proposed language are overly restrictive and will essentially discourage non-US camera and system manufacturers from purchasing US technology. Not allowing de minimis and requiring world-wide licensing is essentially the same as controlling these articles under the ITAR. The proposed 6A990 language includes ROICs which are essentially incorporated into every IRFPA. As demonstrated in FLIR's CAT XII input, most IRFPAs are dual-use. The monetary value of an ROIC is a

few hundred dollars at the most and the consequence of this provision is that a non-US system incorporating a minimal amount of US origin (dual-use) technology will be controlled by the US Government for exports and re-exports. The net result is that non-US technology will be much more desirable than US articles.

The new restrictions proposed for 744.9, end-use/end-user controls will make it almost impossible for a US exporter to confidently certify to an end-use statement. Additionally, US companies will be held to a greater standard than any other licensing regime in the world, including Wassenaar. The proposed language requires that a US exporter perform extensive end-use analysis for products that may be designed for commercial and consumer end-use. For example, consumer markets for automotive, thermography, and smartphones incorporating 6A993 products are expected to experience massive growth. The conditions placed by 744.9 will require assurances that these consumer products are not used by military end-users. Screening consumer level product sales is unnecessary due to the nature of the product and impossible from a compliance standpoint.

The consequences of these controls are very severe and will jeopardize the ability of US companies from leading and participating in the fastest growth markets for this technology. Figure 4 provides a view of the markets that are expanding world-wide. Further, it is clear from this data that the requirements by the military for uncooled Microbolometer IRFPAs represents a fraction of the demand and promises little growth.

Figure 4 UFPA Camera Forecast by Market

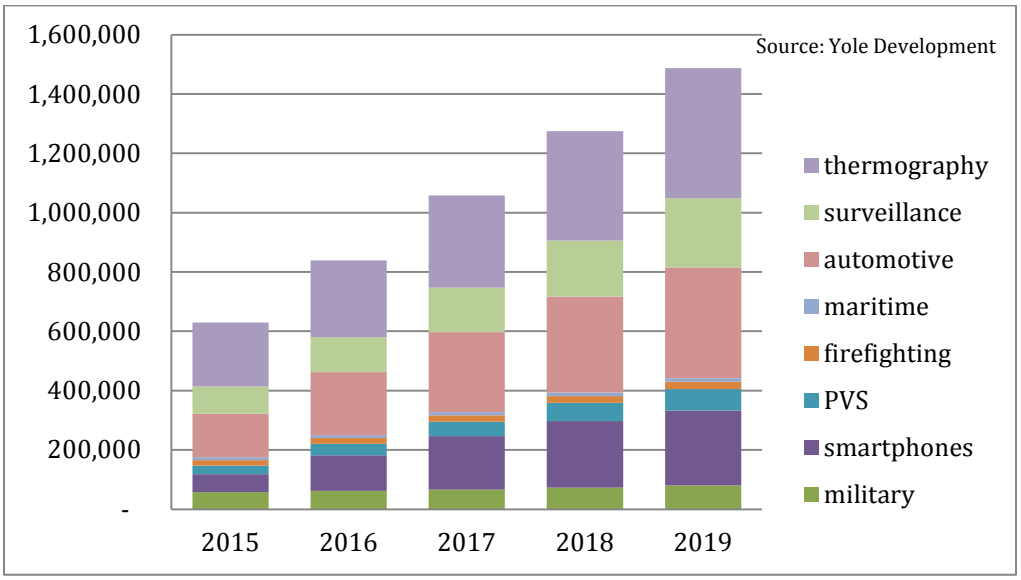

CONCLUSION

FLIR is greatly concerned that the proposal for Category XII does not reflect the expressed purpose of ECR. The proposed draft for CAT XII fails for several reasons as listed below.

- Commercial markets dominate sales of many technologies described in the Category XII draft
- Foreign availability is not adequately considered
- Actual military items are not specified in the proposal

This EAR companion rule is applying tighter controls and removing license exceptions. The UTIC rule within APR and STA have been helpful license exceptions that have allowed US industry to modestly compete within Wassenaar countries. It is incredibly disappointing that the result of multiple years of review of Category XII by the USG Interagency group resulted in a proposal that has serious negative consequences to US industry.

- US companies will be restricted from competing globally
- Non-US sales for commercial and dual-use applications for thermal imaging represent half of the world-wide demand for this technology[2]. US companies will not be able to access these critical revenue sources.
- Advanced technology development will be impeded by reduced financial resources that would be available from non-US sales. Non-US sales have been essential to fund R&D especially since US DOD funding for IRFPA technology development has been greatly reduced over the past decade.
- US companies will not be incentivized to continue to invest in US based technology or factories
- Non-US companies will be motivated to continue to invest in developing this technology and will ultimately dominate the market

Placing ITAR controls on dual-use technology will have the unintended effect of strengthening non-US companies at the expense of US manufacturers. Overseas customers will avoid ITAR controls by turning to those offshore producers; US producers will lose economies of scale, and in the end America's military will become dependent on non-US sources for this vital technology.

Therefore, FLIR recommends that this proposal be fundamentally rewritten after thorough and sincere collaboration with stakeholders among industry, USG, and research institutes. FLIR has been an active participant in this CAT XII discussion by participation and assuming leadership roles in Industry / Government organizations such as the Department of Commerce's Sensors and Instrumentation Technical Advisory Committee (SITAC), and the State Department's Defense Trade Advisory Group (DTAG). FLIR is committed to continue to partner with the USG and work towards the creation of a meaningful and logical path forward to assure protection of US national security as well as create an environment that will allow US companies to thrive, innovate, create jobs, compete globally, and maintain US leadership in a critical technology.

Please contact the undersigned by phone at 503-498-3301 or email at steve.tribble@flir.com

Best regards,
FLIR SYSTEMS, INC.

Steven J. Tribble
Vice President, Global Trade Compliance

[2] MaxTech International 2015 Report "The World Market for Commercial and Dual-Use Infrared Imaging and Infrared Thermometry Equipment"

24 January 2013

Matthew Borman
Bureau of Industry and Security
U.S. Department of Commerce
Washington, DC 20230

RE: Wassenaar Proposal WA-EG (13) US XXX – 6.A.2.f Control of ROICs for Infrared Focal Plane Arrays

Dear Matt:

The Sensors and Instrumentation Technical Advisory Committee (SITAC) has concerns regarding the draft Wassenaar Arrangement (WA) proposal related to controls of readout integrated circuits (ROIC) for infrared focal plane arrays (IRFPA). SITAC does not see any merit in submitting a proposal to Wassenaar to control technology that is widely available both within and outside of the Wassenaar regime. The only possible result would be to put US companies and companies located in Wassenaar member countries at a competitive disadvantage to ROIC designers and manufacturers located in non-Wassenaar countries.

WA Participating States seek, through their national policies, to ensure that transfers of products do not contribute to the development or enhancement of military capabilities. The WA objective will not be improved/protected by placing controls on technology and products that have been widely available worldwide for decades.

The details for the design and manufacturing of ROICs for IRFPAs are widely available in the public domain. There are hundreds of patents issued and annual papers published and presented at international technical symposiums. ROIC design techniques are taught in universities and at conferences. Entities located outside of Wassenaar member states, such as China, Taiwan, and Israel design and manufacture ROICs for infrared focal plane arrays. The ROIC devices are manufactured at silicon foundries world-wide. Existence of this technical capability outside of Wassenaar is evident by the significant number of patents and published papers available on this technology.

ROIC Background

Despite the proposal's implication to the contrary, most ROICs are simple integrated circuit devices – typically less than 25 transistors, repeated thousands of times across the ROIC, one time for each pixel. ROICS can be designed by CMOS integrated circuit (IC) designers graduated every year by most high quality electrical engineering universities in the world. As documented below, the key features of various ROIC designs are published in patents and papers that can be reproduced by a designer skilled in the art of IC design. In addition ROICs can be, and in some instances, are fabricated in nearly all CMOS foundries found throughout the world, e.g., TowerJazz, with Fabs in Israel and Japan, TSMC with Fabs in Taiwan, China and Singapore and SMIC with Fabs in China. The simulation and layout computer tools necessary for ROIC fabrication are also available worldwide as are the same tools used to design many complex integrated circuits such as microprocessors and Flash A/D. The "design rules" for laying out the needed electronic

components or the layouts for the components themselves are available in the libraries of these foundries.

Patents

A recent search of the United States Patent Technology Office database produced over five hundred (500) patents issued worldwide directly related to ROICs for IRFPAs and are listed in Enclosure 1. Additionally, of the five hundred patents there are over fifty (50) patents issued to entities in China, listed in Enclosure 2. The patent searches performed for these reports were not exhaustive and it is highly likely that many more patents related to this technology would be found after a more thorough search.

Published Papers

Papers have been published for decades on the details of the design and testing of ROICs. Following are a few examples of papers that have been published by entities outside of Wassenaar on this topic.

1) The Institution of Electronics and Telecommunications Engineers (IETE) Journal of Research has published many relevant papers including: "320x256 Readout Integrated Circuit for Infrared Focal Plane Arrays with Low-Temperature MOSFET Model". Authored by a team from the National ASIC System Engineering Research Center, Southeast University, Nanjing, Jiangsu, China.
2) SPIE – "Optimization of Readout Circuit with Background Suppression for Dual-Band Quantum Well Infrared Focal Plane Array Photodetector." Authored by a team from the National Chi Nan University in Taiwan.
3) SPIE Photonics Asia – "Design low-noise readout circuit for near-infrared InGaAs focal plane array", Paper 8562-4 Author(s): Zhangcheng Huang, Huang Songlei, Jiaxiong Fang, Shanghai Institute of Technical Physics (China)

The papers referenced above are authored by non-Wassenaar country entities and is a small fraction of papers that have been published on this technology.

Conferences / Symposiums

The International Society of Optical Engineering (SPIE) hosts symposiums where papers on details related to ROICs, focal plane arrays, lasers, and many other electro-optical devices are presented. Additionally, SPIE offers classes, related to ROIC design at conferences, such as the Defense, Security and Sensing Symposium in April 2013. The following examples represent just a small sampling of the over one hundred courses offered either on-line or during this coming session as well as courses that have been offered for almost twenty years.

1) Analog-to-Digital Converters for Digital ROICs (SC1076). This course surveys structure and operation of analog-to-digital converters (ADCs) implemented on digital readout integrated circuits (ROICs) and digital image sensors.
2) SPIE-98-04-01-RFC, SPIE 95-0401-RFC, and SPIE 94-0401-RFC are notes from a week-long ROIC and FPA design course taught annually going back to 1994.

These presentations and courses presented at SPIE are typically approved by the US DOD, and are attended by international and domestic audiences.

University Degrees

Many US and non-US universities have practical courses in IC design. Some of the best universities in this area of study are MIT, Stanford, UC Berkeley, Cal Tech, and the University of Utah. It is common for non-US citizens, including Chinese nationals, that have been educated and received advanced degrees from one of the universities listed above, to apply for and in some cases be hired for IC design positions to US companies that design ROICs.

Consequences

In addition to the basic issue that the technology is widely available, the language in the proposal has many inaccuracies and is not clear. There are consumer level products such as CCD video cameras, automotive sensors, and gaming sensors (X-Box) that will be burdened with new export controls. Currently, the automotive and gaming industries use NIR monolithic FPAs with non-eye-safe lasers. Measuring ranges is required for these industries and the need for longer ranges and increased pixel counts is growing. Because of FDA safety requirements this need is driving laser wavelengths into the eye-safe SWIR band and consequently these industries will be profoundly impacted by this proposed control on ROICs.

The proposed language casts an overly broad net that will capture not only existing consumer products but also those that are under development or not yet envisioned.

ECR and Wassenaar Objectives

While the export control reform (ECR) is focused on the movement of products between the ITAR and the EAR, it has the following primary objectives which are relevant when considering placing new controls on widely available technology;

1. Increase support and improve interoperability with allies
2. Focusing resources on the most significant technologies (support higher walls around fewer items)
3. Enhance our industrial base (reduce incentives to design out US technology; set clear-cut rules)

Further, the Wassenaar Participating States seek to ensure that transfers of products do not contribute to the development or enhancement of military capabilities. This proposal does not provide sufficient specificity to meet either ECR or Wassenaar objectives as it attempts to place controls on technology in a very broad manner that is widely available world-wide and in many cases incorporated into dual-use and consumer products. Non-US entities will be further dis-incentivized to incorporate US and other Wassenaar member produced components into products due to the complications and associated cost of compliance for overly regulated components.

Summary

Based on the above facts, there is no reason to submit a proposal on the control of ROICs into the Wassenaar process. There is significant data available in the public domain through patents, papers, university courses, conferences and symposiums that demonstrates the design and manufacturing capability exists outside of the WA members, and there is no evidence that control of ROICs will advance the objectives of WA or ECR. Additionally, this broadly drafted proposal will capture many commercial and consumer products and result in loss of business to companies located in the US and WA partner countries. SITAC welcomes the opportunity to discuss this issue further with BIS should there be any questions regarding this letter.

Sincerely,

Steven J. Tribble
SITAC Chairman

Enclosure 1

USPTO Data Base Search ROICs for IRFPAs

ROIC and Infrared Focal Plane Array Patents

as of 3 January 2013

(this is not an exhaustive list, it is a sampling)

Item No.	Publication No.	Country	Source	Title	Application No.	Assignee
1	CN102095501	CN	CN Patents	Irfpa (infrared focal plane array) and read-out circuit thereof	CN201010570406	Beijing Guangwei Integrated Circuit Inc.
2	CN102095501	CN	CN Patents	Irfpa (infrared focal plane array) and read-out circuit thereof	CN201010570406	Beijing Guangwei Integrated Circuit Inc.
3	US5326996	US	US Grants	Charge skimming and variable integration time in focal plane arrays	US08/087034	Bae Systems Information And Electronic Systems Integration Inc.
4	US7180046	US	US Grants	Focal plane array with on-chip low-voltage differential serial interface	US10/903565	Bae Systems Information And Electronic Systems Integration Inc.
5	US20060022119	US	US Applications	Focal plane array with on-chip low-voltage differential serial interface	US10/903565	Bae Systems Information And Electronic Systems Integration Inc.
6	US6028309	US	US Grants	Methods and circuitry for correcting temperature-induced errors in microbolometer focal plane array	US09/021714	Flir Systems, Inc.
7	US6675600	US	US Grants	Thermal mismatch compensation technique for integrated circuit assemblies	US10/310230	Schilmass Co. L.l.c.
8	WO9715813	WO	WO Applications	Uncooled focal plane array sensor	US96170	Lockheed-martin Ir Imaging Systems, Inc.
9	CN102447845	CN	CN Patents	Infrared focal plane array readout circuit and adaptive power consumption regulation method thereof	CN201110299627	Peking University
10	WO2005008197	WO	WO Applications	Dual-mode focal plane array for missile seekers	US03404	Bae Systems Information And Electronic Systems Integration Inc.
11	US20100118168	US	US Applications	High density composite focal plane array	US12/327383	Bae Systems Information And Electronic Systems Integration Inc.
12	US5512748	US	US Grants	Thermal imaging system with a monolithic focal plane array and method	US08/281711	L-3 Communications Corporation
13	US7132648	US	US Grants	Uniform, non-disruptive, and radiometrically accurate calibration of infrared focal plane arrays using global s	US10/824285	Science & Technology Corporation @ Unm
14	US5743006	US	US Grants	Method for fabricating a focal plane array for thermal imaging system	US08/485957	L-3 Communications Corporation
15	US5789736	US	US Grants	Signal readout circuit having a two-dimensional focal plane cell array capable of reading out signals with imp	US08/690943	Nec Corporation
16	US6498346	US	US Grants	Large dynamic range focal plane array	US09/666296	Lockheed Martin Corporation
17	US5227656	US	US Grants	Electro-optical detector array	US07/609678	L-3 Communications Corporation
18	US7135680	US	US Grants	Focal plane processor for ir detection	US10/511000	Semi Conductor Devices (scd) Partnership
19	CN101304003	CN	CN Patents	Single slice integration technique for diffraction microlens array and ultraviolet focal plane array	CN200710040514	University Of Shanghai For Science And Technology
20	CN101304003	CN	CN Patents	Single slice integration technique for diffraction microlens array and ultraviolet focal plane array	CN200710040514	University Of Shanghai For Science And Technology
21	CN2754070	CN	CN Patents	Background current inhibition reading-out circuit for infrared focal plane array	CN200420061801	Chongqing Univ.
22	US5449907	US	US Grants	Programmable on-focal plane signal processor	US08/142996	International Business Machines Corp.
23	US5644838	US	US Grants	Method of fabricating a focal plane array for hybrid thermal imaging system	US08/368066	L-3 Communications Corporation
24	US6791610	US	US Grants	Uncooled focal plane array sensor	US09/051180	Lockheed-martin Ir Imaging Systems, Inc.
25	WO2004053443	WO	WO Applications	Thermal mismatch compensation technique for integrated circuit assemblies	US02389	Bae Systems Information And Electronic Systems Integration Inc
26	US6031231	US	US Grants	Infrared focal plane array	US08/927407	Mitsubishi Denki Kabushiki Kaisha
27	US5610389	US	US Grants	Stabilized hybrid focal plane array structure	US08/409229	Drs Sensors & Targeting Systems, Inc.
28	US5604977	US	US Grants	Method of fabricating focal plane array	US08/478570	L-3 Communications Corporation
29	US6906326	US	US Grants	Quantum dot infrared photodetector focal plane array	US10/627460	Retro Reflective Optics, Llc
30	US5585624	US	US Grants	Apparatus and method for mounting and stabilizing a hybrid focal plane array	US08/409230	Drs Sensors & Targeting Systems, Inc.
31	CN101246047	CN	CN Patents	Infrared focal plane array dark field current compensation circuit and method thereof	CN200710049358	University Of Electronic Science And Technology Of China
32	US7566942	US	US Grants	Multi-spectral pixel and focal plane array	US11/251955	Massachusetts Institute Of Technology
33	CN100587419	CN	CN Patents	Infrared focal plane array dark field current compensation circuit	CN200710049358	University Of Electronic Science And Technology Of China
34	CN101635295	CN	CN Patents	Quantum well infrared focal plane array and manufacturing method	CN200910041873	Sun Yat-sen University
35	KR101153722	KR	KR Patents	System in package method of semi-active focal plansystem in package method of semi-active focal plane arr	KR20110023039	Korea Advanced Institute Of Science And Technology
36	CN102494784	CN	CN Patents	Readout circuit and readout method for point-by-point bias correction data of infrared focal plane array ima	CN201110419260	University Of Electronic Science And Technology Of China
37	US20020166968	US	US Applications	Apparatus and method of measuring bolometric resistance changes in an uncooled and thermally unstabiliz	US09/853245	Irvine Sensors Corporation
38	CN102564599	CN	CN Patents	Readout circuit in infrared focal plane array and reference resistor of readout circuit as well as manufacturin	CN201110437202	University Of Electronic Science And Technology Of China
39	CN101635295	CN	CN Patents	Quantum well infrared focal plane array and manufacturing method	CN200910041873	Sun Yat-sen University
40	CN102589718	CN	CN Patents	Reading method of silicon substrate focal plane device	CN201210045860	Zhang Kang
41	CN102589719	CN	CN Patents	Reading circuit of silicon substrate focal plane device	CN201210045862	Zhang Kang
42	US7491938	US	US Grants	Multi-spectral uncooled microbolometer detectors	US11/589525	Bae Systems Information And Electronic Systems Integration Inc.
43	WO2006044983	WO	WO Applications	Multi-spectral pixel and focal plane array	US20050376	Massachusetts Institute Of Technology
44	US5486698	US	US Grants	Thermal imaging system with integrated thermal chopper	US08/229497	L-3 Communications Corporation
45	US6249002	US	US Grants	Bolometric focal plane array	US09/011942	Lockheed-martin Ir Imaging Systems, Inc.
46	US4956695	US	US Grants	Three-dimensional packaging of focal plane assemblies using ceramic spacers	US07/351122	Rockwell International Corporation
47	US6005266	US	US Grants	Very low leakage jfet for monolithically integrated arrays	US08/816313	Princeton University, The Trustees Of
48	US20050017176	US	US Applications	Quantum dot infrared photodetector focal plane array	US10/627460	Retro Reflective Optics, Llc
49	US6495830	US	US Grants	Programmable hyper-spectral infrared focal plane arrays	US09/666828	Lockheed Martin Corporation
50	US5523570	US	US Grants	Double direct injection dual band sensor readout input circuit	US08/276037	Bae Systems Information And Electronic Systems Integration Inc.
51	US5875113	US	US Grants	Process to prevent the exploitation of illicit knowledge of the structure or function of an integrated circuit	US08/746307	Cordell; Steve
52	US20090173883	US	US Applications	Multi-band focal plane array	US11/493121	Northrop Grumman Systems Corporation
53	US7592593	US	US Grants	Multi-band focal plane array	US11/493121	Northrop Grumman Systems Corporation
54	CN102214662	CN	CN Patents	Monolithic integration structure of un-cooled infrared focal plane array detector and manufacturing method	CN201110105424	Peking University
55	JP10281869	JP	JP Applications	Low crosstalk row differential circuit architecture for integrated dichroic focal plane array	JP351565	He Holdings Inc Dba Hughes Electron
56	US20080179520	US	US Applications	Direct-view focal plane array	US11/699839	Northrop Grumman Corporation
57	CN1165078	CN	CN Patents	Pixel array layout method and metal wire structure for focal plane read-out circuit	CN01134707	Beijing University
58	EP1837911	EP	EP Applications	Infrared focal plane array	EP07110375	Mitsubishi Denki Kabushiki Kaisha
59	CN102280456	CN	CN Patents	An infrared focal plane array probe integrated structure and preparation method	CN201110121051	Peking University
60	JP8313359	JP	JP Applications	Focal plane array for hybrid thermal imaging device and manufacture thereof	JP113	Texas Instr Inc Lt;tigt;
61	EP0721224	EP	EP Applications	Focal plane array for hybrid thermal imaging system and method	EP953095	Raytheon Company
62	CN1348209	CN	CN Patents	Pixel array layout method and metal wire structure for focal plane read-out circuit	CN01134707	Beijing Univ.
63	US20070176104	US	US Applications	Multi-spectral uncooled microbolometer detectors	US11/589525	Bae Systems Information And Electronic Systems Integration Inc.

64	JP3187760	JP	JP Grants	Low crosstalk row differential circuit architecture for integrated dichroic focal plane array	JP351565	He Holdings Inc Dba Hughes Electron
65	US20060118729	US	US Applications	Multicycle integration focal plane array (mifpa) for lock-in (li-), gated (g-), and gated lock-in (gli-) imaging, sp	US10/002861	
66	US5424544	US	US Grants	Inter-pixel thermal isolation for hybrid thermal detectors	US08/235835	L-3 Communications Corporation
67	US20120138774	US	US Applications	Focal plane array processing method and apparatus	US13/299995	The Massachusetts Institute Of Technology
68	US7105371	US	US Grants	Method of acquiring an image from an optical structure having pixels with dedicated readout circuits	US10/712844	California Institute Of Technology
69	CN202120912	CN	CN Patents	Non-refrigeration infrared focal plane array detector	CN201120147997	Ir Co Ltd Wuhan High German
70	US5128534	US	US Grants	High charge capacity focal plane array readout cell	US07/554238	Microelectronics Technology, Inc.
71	EP0849802	EP	EP Grants	Low-crosstalk differencing circuit architecture for integrated two-color focal plane arrays	EP973101	Raytheon Company
72	US20090250612	US	US Applications	Post-supported microbolometer pixel	US12/303125	Bae Systems Information And Electronic Systems Integration Inc.
73	US5426303	US	US Grants	Thermal isolation structure for hybrid thermal detectors	US08/235068	L-3 Communications Corporation
74	CN101995295	CN	CN Patents	Non-refrigerating infrared focal plane array as well as preparation method and application thereof	CN200910090545	Peking University
75	US5478242	US	US Grants	Thermal isolation of hybrid thermal detectors through an anisotropic etch	US08/236778	L-3 Communications Corporation
76	US5532484	US	US Grants	Defective pixel signal substitution in thermal imaging systems	US08/304001	L-3 Communications Corporation
77	WO9835212	WO	WO Applications	Methods and circuitry for correcting temperature-induced errors in microbolometer focal plane array	US98020	Indigo Systems Corporation
78	US5663564	US	US Grants	Photovoltaic detector with integrated dark current offset correction	US08/618699	Santa Barbara Research Center
79	EP2363887	EP	EP Applications	Focal plane array and method for manufacturing the same	EP10155249	Sensonor Technologies As
80	EP2363888	EP	EP Applications	Focal plane array and method for manufacturing the same	EP10155250	Sensonor Technologies As
81	US5410145	US	US Grants	Light detector using reverse biased photodiodes with dark current compensation	US08/202127	Coroy, Trenton G.
82	US20030122077	US	US Applications	Method and apparatus for temperature compensation of an uncooled focal plane array	US10/281393	Aprolase Development Co., Llc
83	US20020166967	US	US Applications	Method and apparatus for temperature compensation of an uncooled focal plane array	US09/853819	Aprolase Development Co., Llc
84	EP0651566	EP	EP Applications	Programmable on-focal plane signal processor.	EP94115178	International Business Machines Corporation
85	US5602043	US	US Grants	Monolithic thermal detector with pyroelectric film and method	US08/368067	Texas Instruments Incorporated
86	US20110315880	US	US Applications	Teramos-terahertz thermal sensor and focal plane array	US13/141694	
87	CN102280455	CN	CN Patents	Non-a is made the cooled infrared focal plane array probe	CN201110120925	Ir Co Ltd Wuhan High German
88	US8320423	US	US Grants	Compact, all solid-state, avalanche photodiode emitter-detector pixel with electronically selectable, passive	US12/806904	
89	CN101825516	CN	CN Patents	Device and method for testing infrared focal plane array device	CN201010161721	University Of Electronic Science And Technology Of China
90	US6891160	US	US Grants	Method and apparatus for temperature compensation of an uncooled focal plane array	US10/281393	Aprolase Development Co., Llc
91	US6555842	US	US Grants	Active pixel sensor with intra-pixel charge transfer	US09/604846	California Institute Of Technology
92	US6476392	US	US Grants	Method and apparatus for temperature compensation of an uncooled focal plane array	US09/853819	Aprolase Development Co., Llc
93	US4369458	US	US Grants	Self-aligned, flip-chip focal plane array configuration	US06/165158	Micron Technology, Inc.
94	US5382977	US	US Grants	Electronically scanned buffered direct injection circuit for staring ir focal plane array	US08/124845	Rockwell International Corporation
95	JP2012531070	JP	JP Patents	Miniature phase revision antenna for high resolution focal plane thz image pickup array	JP2012513283	Ohio State Di Salt Lake City
96	US20070034776	US	US Applications	Active search sensor and a method of detection using non-specular reflections	US11/064589	Bae Systems Information And Electronic Systems Integration Inc.
97	EP0859413	EP	EP Applications	Infrared focal plane array	EP98100324	Mitsubishi Denki Kabushiki Kaisha
98	US5847390	US	US Grants	Reduced stress electrode for focal plane array of thermal imaging system and method	US08/838663	Raytheon Company
99	US8294099	US	US Grants	On-wafer butted microbolometer imaging array	US12/757247	Bae Systems Information And Electronic Systems Integration Inc.
100	CN102384789	CN	CN Patents	Infrared focal plane array device and manufacture method thereof	CN201010267982	Institute Of Microelectronics Chinese Academy Of Sciences
101	US5757000	US	US Grants	Reduced stress focal plane array for thermal imaging system and method	US08/842933	Raytheon Company
102	EP0507541	EP	EP Applications	Infrared focal plane array processor with integrator and low pass filter per pixel.	EP92302814	Raytheon Company
103	EP1463960	EP	EP Applications	Dual mode adaptive threshold architecture for 3-d ladar focal plane array	EP037012	Raytheon Company
104	US20060091284	US	US Applications	Multi-spectral pixel and focal plane array	US11/251955	Massachusetts Institute Of Technology
105	US5834775	US	US Grants	Integral slot shield for infrared focal plane arrays	US08/768254	Drs Infrared Technologies, Lp
106	EP0553406	EP	EP Applications	Readout amplifier for staring ir focal plane array.	EP921188	Rockwell International Corporation
107	US20100258725	US	US Applications	On-wafer butted microbolometer imaging array	US12/757247	Bae Systems Information And Electronic Systems Integration, Inc.
108	US5751005	US	US Grants	Low-crosstalk column differencing circuit architecture for integrated two-color focal plane arrays	US08/770311	Raytheon Company
109	EP0678756	EP	EP Grants	Staring focal plane array architecture for multiple applications	EP951058	Raytheon Ti Systems, Inc.
110	US20080079704	US	US Applications	Multi-color read-out integrated circuit	US11/529811	Teledyne Scientific & Imaging, Llc
111	US5756999	US	US Grants	Methods and circuitry for correcting temperature-induced errors in microbolometer focal plane array	US08/799663	Flir Systems, Inc.
112	US5268576	US	US Grants	Infrared focal plane array processor with integration and low pass filter per pixel	US07/942113	Raytheon Company, A Corporation Of Delaware
113	US5574282	US	US Grants	Thermal isolation for hybrid thermal detectors	US08/268365	Texas Instruments Incorporated, A Corp. Of Delaware
114	US6359290	US	US Grants	Self-aligned bump bond infrared focal plane array architecture	US08/595901	Raytheon Company
115	US20040011962	US	US Applications	Multicycle integration focal plane array (mifpa) for lock-in (li-), gated (g-), and gated lock-in (gli-) imaging, sp	US10/973710	Chin Ken K.
116	US5578826	US	US Grants	Thermal isolation for hybrid thermal detectors	US08/468159	Texas Instruments Incorporated, A Corp. Of Delaware
117	US5846850	US	US Grants	Double sided interdiffusion process and structure for a double layer heterojunction focal plane array	US08/706583	Drs Infrared Technologies, Lp
118	US7489351	US	US Grants	Dynamic range extension for focal plane arrays	US11/038167	Schilmass Co. L.l.c.
119	US6649913	US	US Grants	Method and apparatus providing focal plane array active thermal control elements	US10/084687	Raytheon Company
120	US6384413	US	US Grants	Focal plane infrared readout circuit	US09/416964	California Institute Of Technology
121	US5536680	US	US Grants	Self-aligned bump bond infrared focal plane array architecture	US08/437614	Texas Instruments Incorporated
122	US20060164530	US	US Applications	Dynamic range extension for focal plane arrays	US11/038167	Schilmass Co. L.l.c.
123	US5327234	US	US Grants	Time delay and integrate focal plane array detector	US07/729659	Raytheon Company, A Corporation Of Delaware
124	US20060125940	US	US Applications	Substitution of defective readout circuits in imagers	US10/011841	Bae Systems Information And Electronic Systems Integration Inc.
125	WO2006023160	WO	WO Applications	Focal plane array with on-chip low-voltage differential serial interface	US20050248	Bae Systems Information And Electronic Systems Integration Inc.
126	US20050279920	US	US Applications	Self-pixelating focal plane array with electronic output	US10/873045	The Boeing Company
127	US6479320	US	US Grants	Vacuum package fabrication of microelectromechanical system devices with integrated circuit components	US09/496826	L-3 Communications Corporation
128	US6586831	US	US Grants	Vacuum package fabrication of integrated circuit components	US09/928031	L-3 Communications Corporation
129	USRE40249	US	US Grants	Infrared imaging system employing on-focal plane nonuniformity correction	US09/667826	Amber Engineering, Inc., California
130	CN101242495	CN	CN Patents	Self-adapted digitalization method and its circuit for infrared plane array	CN200710020008	Nanjing University Of Science And Technology

131	US20100044552	US	US Applications	Automatic simultaneous dual gain readout integrated circuit using threshold voltage shifts of mosfet bulk to	US12/194505	Lockheed Martin Corporation
132	WO2010021894	WO	WO Applications	Automatic simultaneous dual gain readout integrated circuit using threshold voltage shifts of mosfeet bulk t	US20090536	Lockheed Martin Corporation
133	CN100544411	CN	CN Patents	Self-adapted digitalization method and its circuit for infrared plane array	CN200710020008	Nanjing University Of Science And Technology
134	WO03103364	WO	WO Applications	Focal plane processor for ir detection	IL03004	Semi Conductor Devices (scd) Partnership
135	US5113365	US	US Grants	Method and charge coupled apparatus for algorithmic computations	US07/352765	Massachusetts Institute Of Technology, A Corp. Of Massachusetts
136	US7269359	US	US Grants	Focal plane array with synchronous detection circuits for an active remote sensing system	US10/322692	Exelis Inc.
137	US8319862	US	US Grants	Non-uniformity correction of images generated by focal plane arrays of photodetectors	US12/162366	Rafael Advanced Defense Systems Ltd.
138	US20050072923	US	US Applications	Focal plane processor for ir detection	US10/442934	Semi Conductor Devices (scd) Partnership
139	US20120248288	US	US Applications	Dual well read-out integrated circuit (roic)	US13/074290	Flir Systems, Inc.
140	WO9708753	WO	WO Applications	Bolometric focal plane array	US96138	Lockheed-martin Ir Imaging Systems
141	US5811808	US	US Grants	Infrared imaging system employing on-focal plane nonuniformity correction	US08/712891	Amber Engineering, Inc., California
142	US5296816	US	US Grants	Integrated circuit sensor and detector and spectrometers incorporating the sensor	US07/820862	Micromass Uk Limited
143	EP0645925	EP	EP Grants	A signal readout circuit and its drive circuit	EP94114560	Nec Corporation
144	US6204496	US	US Grants	Focal plane readout unit cell induced pulse diversion circuit and method	US09/163930	Raytheon Company
145	US4660066	US	US Grants	Structure for packaging focal plane imagers and signal processing circuits	US06/767063	Texas Instruments Incorporated
146	US20050151079	US	US Applications	Focal plane processor for ir detection	US10/511000	Semi Conductor Devices (scd) Partnership
147	WO2008118535	WO	WO Applications	Post-supported microbolometer pixel	US20080527	Bae Systems Information And Electronic Systems Integration Inc.
148	US6744068	US	US Grants	Active pixel sensor with intra-pixel charge transfer	US10/388250	California Institute Of Technology
149	US4720738	US	US Grants	Focal plane array structure including a signal processing system	US06/898890	Raytheon Company
150	CN101740501	CN	CN Patents	Photoelectrical p-n junction modification method of ion implantation type hgcdte infrared focal plane	CN200910198960	Shanghai Institute Of Technical Physics, Chinese Academy Of Sciences
151	JP3839486	JP	JP Grants	Non cooling focal plane arrangement sensor	JP51676497	Lockheed Martin Love Ares Imaging Systems Inc
152	EP0529998	EP	EP Applications	Uncooled focal plane array.	EP92307730	Texas Instruments Incorporated
153	US6157404	US	US Grants	Imaging system including an array of dual-band microbridge detectors	US09/119158	Lockheed-martin Ir Imaging Systems, Inc.
154	US8283632	US	US Grants	Multi-color read-out integrated circuit	US11/529811	Teledyne Scientific & Imaging, Llc
155	US7852391	US	US Grants	Substitution of defective readout circuits in imagers	US10/011841	Bae Systems Information And Electronic Systems Integration Inc.
156	JP2008523772	JP	JP Applications	The imaging system which possesses the substitute redundant read-out ability of the read-out	JP2007546863	Bieii Information Systems And Electronic Systems Integrator Application Inc
157	CN101740501	CN	CN Patents	Photoelectrical p-n junction modification method of ion implantation type hgcdte infrared focal plane	CN200910198960	Shanghai Institute Of Technical Physics, Chinese Academy Of Sciences
158	US4661168	US	US Grants	Method of integrating infrared sensitive image recording element with ccd on same substrate	US06/802601	Licentia Patent-verwaltungs-gmbh
159	US4956602	US	US Grants	Wafer scale testing of redundant integrated circuit dies	US07/310841	Amber Engineering, Inc.
160	US4654622	US	US Grants	Monolithic integrated dual mode ir/mm-wave focal plane sensor	US06/781557	Honeywell Inc.
161	WO2010056661	WO	WO Applications	High density composite focal plane array	US20090638	Bae Systems Information And Electronic Systems Integration Inc.
162	US5559332	US	US Grants	Thermal detector and method	US08/334666	L-3 Communications Corporation
163	US6136517	US	US Grants	Method for photo composition of large area integrated circuits	US09/036090	Raytheon Company
164	US6879923	US	US Grants	Digital offset corrector	US09/881648	Lockheed-martin Ir Imaging Systems, Inc.
165	US6509962	US	US Grants	Integrated circuit image sensor for wheel alignment systems	US09/566247	Hunter Engineering Company
166	US4445117	US	US Grants	Transistorized focal plane having floating gate output nodes	US06/335131	Hughes Aircraft Company, A Corp. Of De
167	US5426566	US	US Grants	Multichip integrated circuit packages and systems	US08/000826	International Business Machines Corporation
168	US6660988	US	US Grants	Detector selective fpa architecture for ultra-high fpa operability and fabrication method	US09/846726	Teledyne Scientific & Imaging, Llc
169	WO2004053443	WO	WO Applications	Thermal mismatch compensation technique for integrated circuit assemblies	US02389	Bae Systems Information And Electronic Systems Integration Inc
170	US5399989	US	US Grants	Voltage amplifying source follower circuit	US07/804346	Conexant Systems, Inc.
171	US7045761	US	US Grants	Self-pixelating focal plane array with electronic output	US10/873045	The Boeing Company
172	US6335478	US	US Grants	Thermopile infrared sensor, thermopile infrared sensors array, and method of manufacturing the same	US09/628677	Chou, Bruce S.c.
173	US4652901	US	US Grants	Infrared sensitive silicon substrate with integrated electronic processing devices and method for producing s	US06/346730	Licentia Patent-verwaltungs-gmbh
174	CN1477859	CN	CN Patents	Flash electric charge amplification structure focal plane reading-out circuit and its reset reading-out method	CN03142613	Beijing Univ.
175	CN1203663	CN	CN Patents	Flash electric charge amplification structure focal plane reading-out circuit and its reset reading-out method	CN03142613	Beijing Univ.
176	JP2008134143	JP	JP Applications	Verification structure and verification method of infrared thermal image array module	JP2006320354	Ministry Of National Defense Chung Shan Inst Of Science & Technology
177	US7608823	US	US Grants	Multimode focal plane array with electrically isolated commons for independent sub-array biasing	US11/163022	Teledyne Scientific & Imaging, Llc
178	JP7128696	JP	JP Applications	Programmable focal plane signal processor and system	JP18378994	Internatl Business Mach Corp Lt;ibmgt;
179	CN102466521	CN	CN Patents	Tdi (time delay integration) scan imaging method for snapshot type area array infrared detector	CN201010540463	Nanjing University Of Science
180	US7858917	US	US Grants	Digital photon-counting geiger-mode avalanche photodiode solid-state monolithic intensity imaging focal-pl	US10/836896	Massachusetts Institute Of Technology
181	US20080121944	US	US Applications	Verification architecture of infrared thermal imaging array module	US11/604314	Chung Shan Institute Of Science And Technology
182	CN1900741	CN	CN Patents	High spectrum full polarization three dimension imaging integrate detecting system	CN200510086927	Beijing Univ. Of Aeronatucis And Astronatucis
183	US5740314	US	US Grants	Ir heating lamp array with reflectors modified by removal of segments thereof	US08/702746	Edison Welding Institute
184	WO9701926	WO	WO Applications	Digital offset corrector for microbolometer array	US96110	Lockheed Martin Ir Imaging Systems
185	US7462920	US	US Grants	Verification architecture of infrared thermal imaging array module	US11/604314	Chung Shan Institute Of Science And Technology
186	WO03029772	WO	WO Applications	Imaging array	US02299	Hrl Laboratories, Llc
187	US20110115916	US	US Applications	System for mosaic image acquisition	US12/619443	Pv Labs, Inc.
188	US20110272559	US	US Applications	Detector array for high speed sampling of a pulse	US12/776094	Flir Systems, Inc., Oregon
189	US20090237511	US	US Applications	Multi-window/multi-target tracking (mw/mt tracking) for point source objects	US12/050344	Bae Systems Information And Electronic Systems Integration Inc.
190	CN102288959	CN	CN Patents	A millimetric wave focal plane passive iamging system and method	CN201110164899	Beijing Institute Of Technology
191	US20030122079	US	US Applications	Millimeter wave imaging array	US10/256335	Hrl Laboratories, Llc
192	US20070076481	US	US Applications	Multimode focal plane array with electrically isolated commons for independent sub-array biasing	US11/163022	Teledyne Scientific & Imaging, Llc
193	US5438336	US	US Grants	Focal plane imaging array with internal calibration source	US08/151713	Northrop Grumman Systems Corporation
194	CN102565069	CN	CN Patents	Infrared microscopic non-destructive detector for integrated circuit	CN201110434080	Tianjin University Of Technology
195	US6147340	US	US Grants	Focal plane readout unit cell background suppression circuit and method	US09/163937	Raytheon Company
196	CN102809436	CN	CN Patents	One kind of infrared row of focal-plane reading circuits	CN201210289417	Wuxi Meng Involved In Sensing Technology Co Ltd
197	KR20120100643	KR	KR Patents	Infrared detector with semi-active focal plane array and method for manufacturing the same	KR20110019687	Korea Advanced Institute Of Science And Technology

198	CN101354288	CN	CN Patents	High speed low power consumption double-row line infrared focal plane read-out circuit	CN200810119756	Peking University
199	US5949483	US	US Grants	Active pixel sensor array with multiresolution readout	US08/785930	California Institute Of Technology
200	EP1928025	EP	EP Applications	Process control for the design and fabrication of thermal imaging array modules	EP060247	Chung Shan Institute Of Science And Technology
201	CN101354288	CN	CN Patents	High speed low power consumption double-row line infrared focal plane read-out circuit	CN200810119756	Peking University
202	US6329649	US	US Grants	Mm-wave/ir monolithically integrated focal plane array	US09/414988	Hrl Laboratories, Llc A Corporation Of California,
203	US7492400	US	US Grants	Adaptive pixel for high dynamic range and disturbance detection and correction	US10/858944	Board Of Trustees Of The Leland Stanford Junior University, The
204	CN100451678	CN	CN Patents	High spectrum full polarization three dimension imaging integrate detecting system	CN200510086927	Beijing Univ. Of Aeronatucis And Astronatucis
205	US6166768	US	US Grants	Active pixel sensor array with simple floating gate pixels	US08/785931	California Institute Of Technology
206	US6943838	US	US Grants	Active pixel sensor pixel having a photodetector whose output is coupled to an output transistor gate	US09/749989	California Institute Of Technology
207	US5539206	US	US Grants	Enhanced quantum well infrared photodetector	US08/425598	Lockheed Martin Corporation
208	US6693670	US	US Grants	Multi-photodetector unit cell	US09/629703	Vision - Sciences Inc.
209	US4416054	US	US Grants	Method of batch-fabricating flip-chip bonded dual integrated circuit arrays	US06/427333	Micron Technology, Inc.
210	US7489024	US	US Grants	Tmos-infrared uncooled sensor and focal plane array	US10/545892	Technion Research & Development Foundation Ltd
211	US8218012	US	US Grants	Multi-window/multi-target tracking (mw/mt tracking) method and system for point source objects	US12/050344	Bae Systems Information And Electronic Systems Integration Inc.
212	US8026471	US	US Grants	Single-photon avalanche detector-based focal plane array	US12/178329	Princeton Lightwave, Inc.
213	CN102410880	CN	CN Patents	Infrared focal plane array blind pixel detection method based on integral time adjustment	CN201110223261	Chongqing University Of Posts And Telecommunications
214	CN101876570	CN	CN Patents	Readout integrated circuit with automatic blind-pixel elimination function	CN201010142926	Shanghai Institute Of Technical Physics, Chinese Academy Of Sciences
215	US20050224714	US	US Applications	Ultra low-cost uncooled infrared detector arrays in cmos	US11/100037	Akin, Tayfun
216	US20100019128	US	US Applications	Focal plane array imager	US12/178329	Princeton Lightwave, Inc.
217	US5627923	US	US Grants	Three-dimensional opto-electric integrated circuit using optical wiring	US08/307239	Hitachi, Ltd.
218	EP1282045	EP	EP Applications	Parallel processing logic circuit for sensor processing	EP024000	Nippon Telegraph And Telephone Corporation
219	US6369933	US	US Grants	Optical correlator having multiple active components formed on a single integrated circuit	US09/542554	Citizen Finetech Miyota Co., Ltd.
220	US5793322	US	US Grants	Successive approximation analog-to-digital converter using balanced charge integrating amplifiers	US08/744955	California Institute Of Technology, California
221	US20060244067	US	US Applications	Tmos-infrared uncooled sensor and focal plane array	US10/545892	Technion Research & Development Foundation Ltd
222	US6247037	US	US Grants	Optical correlator having multiple active components formed on a single integrated circuit	US09/238311	Micron Technology, Inc.
223	CN101358880	CN	CN Patents	Infrared focal plane read-out circuit and output stage structure thereof	CN200810119758	Peking University
224	WO2004075251	WO	WO Applications	Tmos-infrared uncooled sensor and focal plane array	IL20040001	Technion Research & Development Foundation Ltd.
225	CN202003246	CN	CN Patents	Bi-directional digital-type infrared focal plane temperature control system	CN201120047264	Overall System Of China Ministry Of Ordnance Industry
226	US5386128	US	US Grants	Monolithic in-based iii-v compound semiconductor focal plane array cell with single stage ccd output	US08/186185	United States Of America, The, As Represented By The Administrator Of The National Aeronautics And S
227	CN101358880	CN	CN Patents	Infrared focal plane read-out circuit and output stage structure thereof	CN200810119758	Peking University
228	US6274869	US	US Grants	Digital offset corrector	US09/981109	Lockheed-martin Ir Imaging Systems, Inc.
229	US5391875	US	US Grants	Infrared sensor package	US07/555867	Raytheon Company, A De Corp., Massachusetts
230	US7915585	US	US Grants	Microbolometer pixel and fabrication method utilizing ion implantation	US12/414766	Bae Systems Information And Electronic Systems Integration Inc.
231	US20100243896	US	US Applications	Microbolometer pixel and fabrication method utilizing ion implantation	US12/414766	Bae Systems Information And Electronic Systems Integration Inc.
232	US5237334	US	US Grants	Focal plane antenna array for millimeter waves	US07/876696	Waters; William M.
233	EP1637903	EP	EP Applications	Three-dimensional imaging processing module incorporating stacked layers containing microelectronic circu	EP04104485	Ludwig, David E.
234	US6665013	US	US Grants	Active pixel sensor having intra-pixel charge transfer with analog-to-digital converter	US09/305346	California Institute Of Technology
235	US7411672	US	US Grants	Method and apparatus for chemical imaging in a microfluidic circuit	US11/824878	Chemimage Corporation
236	EP1007920	EP	EP Grants	Methods and circuitry for correcting temperature-induced errors in microbolometer focal plane array	EP98904855	Indigo Systems Corporation
237	WO02084741	WO	WO Applications	Monolithic infrared focal plane array detectors	US02117	Epir Ltd.
238	EP0857296	EP	EP Applications	Uncooled focal plane array sensor	EP969369	Lockheed-martin Ir Imaging Systems
239	JP5198848	JP	JP Applications	Focal plane-array	JP226004	Texas Instr Inc Lt;tigt;
240	US4780605	US	US Grants	Coherent light phase detecting focal plane charge-transfer-device	US07/121966	Lockheed Martin Corporation
241	US5925883	US	US Grants	Staring ir-fpa with ccd-based image motion compensation	US08/900408	Raytheon Company
242	CN101740502	CN	CN Patents	Light sensitive component array forming method of mercury cadmium telluride micro-table-board infrared d	CN200910198967	Shanghai Institute Of Technical Physics, Chinese Academy Of Sciences
243	US7488926	US	US Grants	Pixel array with shared pixel output lines	US11/326354	Microsoft Corporation
244	US20030102432	US	US Applications	Monolithic infrared focal plane array detectors	US09/833363	Epir Technologies, Inc.
245	EP0242748	EP	EP Applications	Bipolar/mos input circuit for photovoltaic detectors.	EP871054	Honeywell Inc.
246	CN101740502	CN	CN Patents	Light sensitive component array forming method of mercury cadmium telluride micro-table-board infrared d	CN200910198967	Shanghai Institute Of Technical Physics, Chinese Academy Of Sciences
247	US5459319	US	US Grants	Radiation detector circuit having a 1-bit quantized output	US07/159538	Boeing Company, The, A Corp. Of De
248	EP0870330	EP	EP Grants	Bolometric focal plane array	EP96929779	Lockheed-martin Ir Imaging Systems
249	US20060249658	US	US Applications	Method and apparatus for providing enhanced resolution in photodetectors	US11/125305	Sensors Unlimited, Inc.
250	US6657194	US	US Grants	Multispectral monolithic infrared focal plane array detectors	US09/834446	Epir Technologies, Inc.
251	FR2599529	FR	FR Patents	Method of integrating detection diode output currents into a monolithic integrated circuit and integrator fo	FR86079	Telecommunications Sa
252	US5315147	US	US Grants	Monolithic focal plane array	US07/412161	Grumman Aerospace Corporation, 1111 Stewart Ave., Behtpage, Ny 11714-3580
253	US6906304	US	US Grants	Photo-sensor array for motion detection	US10/305062	Microsoft Corporation
254	US5185292	US	US Grants	Process for forming extremely thin edge-connectable integrated circuit structure	US07/802882	Harris Corporation
255	WO2011107487	WO	WO Applications	Focal plane array and method for manufacturing the same	EP2011053050	Sensonor Technologies As
256	WO2011107486	WO	WO Applications	Focal plane array and method for manufacturing the same	EP2011053049	Sensonor Technologies As
257	US6515285	US	US Grants	Method and apparatus for compensating a radiation sensor for ambient temperature variations	US09/502840	Bae Systems Information And Electronic Systems Integration Inc.
258	US6355939	US	US Grants	Multi-band infrared photodetector	US09/185262	Lockheed Martin Corporation
259	WO2005098380	WO	WO Applications	Ultra low-cost uncooled infrared detector arrays in cmos	EP2005051529	Akin, Tayfun
260	JP7154702	JP	JP Applications	Focal plane array integrated circuit for individually performing picture signal processing	JP174995	Texas Instr Inc Lt;tigt;
261	US6521477	US	US Grants	Vacuum package fabrication of integrated circuit components	US09/496820	L-3 Communications Corporation
262	US5489554	US	US Grants	Method of making a 3-dimensional circuit assembly having electrical contacts that extend through the ic lay	US08/192207	Tally Loch Investments Llc
263	US5729285	US	US Grants	Focal plane array integrated circuit with individual pixel signal processing	US08/474229	L-3 Communications Corporation
264	US5926217	US	US Grants	Focal plane array integrated circuit with individual pixel signal processing	US08/097522	L-3 Communications Corporation

265	US6317536	US	US Grants	Phased fiber array for multiplexing and demultiplexing	US09/445648	Corning Incorporated
266	US6080987	US	US Grants	Infrared-sensitive conductive-polymer coating	US08/958955	L-3 Communications Corporation
267	US6172417	US	US Grants	Integrated semiconductor devices	US08/535677	Lucent Technologies, Inc.
268	JP2004333132	JP	JP Applications	Thermal infrared solid-state imaging apparatus	JP2003124794	Mitsubishi Electric Corp
269	JP2008511042	JP	JP Applications	Lens control method and the device and camera module which installs this	JP2007530099	Panabijon Raiabiriti Imaging Company Ltd
270	US5471515	US	US Grants	Active pixel sensor with intra-pixel charge transfer	US08/188032	California Institute Of Technology
271	US7616877	US	US Grants	Method and apparatus for controlling a lens, and camera module incorporating same	US11/210022	Panavision Imaging, Llc
272	US7583074	US	US Grants	Low cost millimeter wave imager	US11/303642	Hrl Laboratories, Llc
273	JP8021767	JP	JP Applications	Infrared detector and preparation thereof	JP35830	Texas Instr Inc Lt;tigt;
274	CN1933149	CN	CN Patents	Backward integrated micro-lens infrared focal plane detector and micro-lens producing method	CN200610117106	Shanghai Inst. Of Technical Physics
275	US20120006971	US	US Applications	Radiation-hardened roic with tdi capability, multi-layer sensor chip assembly and method for imaging	US12/831694	Raytheon Company
276	JP6201457	JP	JP Applications	High-speed event detector and queuing sensor thereof	JP202952	Eiru Syst Inc
277	US20100309288	US	US Applications	3-dimensional hybrid camera and production system	US12/782845	Advanced Scientific Concepts, Inc.
278	US7777186	US	US Grants	Pixel interconnect insulators and methods thereof	US12/191596	L-3 Communications Cincinnati Electronics Corporation
279	US20100038539	US	US Applications	Pixel interconnect insulators and methods thereof	US12/191596	Cincinnati Electronics Corporation
280	EP0663696	EP	EP Grants	Thermal imaging device	EP953000	Raytheon Company
281	CN101103308	CN	CN Patents	Method and apparatus for controlling a lens, and camera module incorporating same	CN200580033219	Panavision Imaging Llc
282	EP1463960	EP	EP Grants	Dual mode adaptive threshold architecture for 3-d ladar focal plane array	EP037012	Raytheon Company
283	JP5027661	JP	JP Patents	Lens control method and the device and camera module which installs this	JP2007530099	Panavision Imaging Limited Liability Company
284	US7109488	US	US Grants	Multi-color infrared imaging device	US10/787907	Army, United States Of America As Represented By The Department Of The
285	US20120326124	US	US Applications	Frontside-illuminated inverted quantum well infrared photodetector devices	US13/605465	L-3 Communications Cincinnati Electronics Corporation
286	US20080316026	US	US Applications	Method and apparatus for detecting presence and range of a target object using a common detector	US11/812445	Lockheed Martin Corporation
287	US7332720	US	US Grants	Cold shield for cryogenic camera	US10/683073	Northrop Grumman Systems Corporation
288	CN101103308	CN	CN Patents	Method and apparatus for controlling a lens, and camera module incorporating same	CN200580033219	Panavision Imaging Llc
289	EP0721224	EP	EP Applications	Focal plane array for hybrid thermal imaging system and method	EP953095	Raytheon Company
290	EP0678756	EP	EP Applications	Staring focal plane array architecture for multiple applications.	EP951058	Raytheon Ti Systems, Inc.
291	US7235773	US	US Grants	Method and apparatus for image signal compensation of dark current, focal plane temperature, and electro	US11/104206	Exelis, Inc.
292	JP3998599	JP	JP Grants	Thermal infrared solid-state imaging apparatus	JP2003124794	Mitsubishi Electric Corp
293	EP0680101	EP	EP Grants	Thermal detector and method of making the same	EP953029	Raytheon Company
294	US20100038520	US	US Applications	Method and apparatus for detecting presence and range of a target object using a multimode detector	US12/581640	Lockheed Martin Corporation
295	CN201229510	CN	CN Patents	High precision temperature control device for infrared focus plane	CN200820068474	Hubei Grinds Plentiful Photoelectricity Science And Technology Co., Ltd.
296	US5485010	US	US Grants	Thermal isolation structure for hybrid thermal imaging system	US08/182868	L-3 Communications Corporation
297	CN101894848	CN	CN Patents	Tellurium-cadmium-mercury infrared focal plane integrated with anti-reflection film and method for prepari	CN201010198869	Shanghai Institute Of Technical Physics, Chinese Academy Of Sciences
298	US5426304	US	US Grants	Infrared detector thermal isolation structure and method	US08/182865	Raytheon Company, A Corporation Of Delaware
299	US5436450	US	US Grants	Infrared detector local biasing structure and method	US08/182268	Raytheon Company, A Corporation Of Delaware
300	US20080208514	US	US Applications	Threat launch detection system and method	US11/588247	Bae Systems Information And Electronic Systems Integration Inc.
301	CN100444381	CN	CN Patents	Backward integrated micro-lens infrared focal plane detector and micro-lens producing method	CN200610117106	Shanghai Inst. Of Technical Physics
302	US7224009	US	US Grants	Method for forming a low leakage contact in a cmos imager	US11/128176	Micron Technology, Inc.
303	CN100433328	CN	CN Patents	Infrared focal plane detector with antireflective convergence microlens and microlens preparing method	CN200610118053	Shanghai Inst. Of Technical Physics, Cas
304	CN101201271	CN	CN Patents	Internal modulation type ferro-electricity non-refrigeration infrared focal plane prober	CN200710066481	Yunnan Nationalities University
305	CN1949508	CN	CN Patents	Infrared focal plane detector with antireflective convergence microlens and microlens preparing method	CN200610118053	Shanghai Inst. Of Technical Physics, Cas
306	CN101871817	CN	CN Patents	Hybrid-type pyroelectric uncooled focal plane detector and manufacturing process thereof	CN200910094401	Kunming Institute Of Physics
307	US7385199	US	US Grants	Microbolometer ir focal plane array (fpa) with in-situ mirco vacuum sensor and method of fabrication	US11/162849	Teledyne Scientific & Imaging, Llc
308	US5179283	US	US Grants	Infrared detector focal plane	US07/390058	Raytheon Company A Corporation Of Delaware
309	CN102509728	CN	CN Patents	Design and preparation method of non-refrigeration infrared detector	CN201110338955	Peking University
310	US20070075888	US	US Applications	Digital readout method and apparatus	US11/415007	Massachusetts Institute Of Technology, The
311	US20120193608	US	US Applications	Frontside-illuminated inverted quantum well infrared photodetector devices and methods of fabricating the	US13/019658	L-3 Communications Cincinnati Electronics Corporation
312	US5572059	US	US Grants	Thermal isolation of hybrid thermal detectors through an anisotropic etch	US08/477718	L-3 Communications Corporation
313	US5602392	US	US Grants	Thermal crosstalk reduction for infrared detectors with common electrodes	US08/476409	L-3 Communications Corporation
314	US5304791	US	US Grants	Apparatus for detecting high speed events	US07/919136	Ail Systems, Inc.
315	CN101201271	CN	CN Patents	Internal modulation type ferro-electricity non-refrigeration infrared focal plane prober	CN200710066481	Yunnan Nationalities University
316	US20090268069	US	US Applications	Photopumped semiconductor image amplifier with optical preamplification	US12/148970	Northrop Grumman Systems Corporation
317	CN1214480	CN	CN Patents	Apparatus which includes virtually imaged phased array (vipa) in combination with wavelength splitter to de	CN98119460	Fujitsu, Ltd.
318	EP0999599	EP	EP Applications	Optical cavity enhancement infrared photodetector	EP99250287	Lockheed Martin Corporation
319	CN101894848	CN	CN Patents	Tellurium-cadmium-mercury infrared focal plane integrated with anti-reflection film and method for prepari	CN201010198869	Shanghai Institute Of Technical Physics, Chinese Academy Of Sciences
320	JP11223745	JP	JP Applications	Device equipped with virtual image phase array combined with wavelength demultiplexer for demultiplexing	JP285015	Fujitsu Ltd
321	US5309223	US	US Grants	Laser-based semiconductor lead measurement system	US07/719727	Cyberoptics Corporation
322	US5457318	US	US Grants	Thermal detector apparatus and method using reduced thermal capacity	US08/235413	L-3 Communications Corporation
323	US7245133	US	US Grants	Integration of photon emission microscope and focused ion beam	US10/985808	Dcg Systems, Inc.
324	WO2007085942	WO	WO Applications	Photodiode readout circuit	IB2007000165	Melexis Nv
325	US20070012870	US	US Applications	Analog bus driver and multiplexer	US11/454342	California Institute Of Technology
326	WO2006138564	WO	WO Applications	Analog bus driver and multiplexer	US20060234	California Institute Of Technology
327	US7579594	US	US Grants	Infrared radiation imager having sub-pixelization and detector interdigitation	US12/033648	Drs Sensors & Targeting Systems, Inc.
328	US20120001073	US	US Applications	Ir detector system and method	US13/203220	Selex Galileo Limited
329	CN1696658	CN	CN Patents	Multichannel detector module on focal plane of infrared ray and installation method	CN200510025915	Shanghai Inst Of Tech Physics, C.a.s
330	US7145124	US	US Grants	Multispectral imaging chip using photonic crystals	US10/941204	Raytheon Company
331	EP0644443	EP	EP Applications	Three-dimensional opto-electric integrated circuit using optical wiring.	EP941143	Hitachi, Ltd.

332	CN101872804	CN	CN Patents	Plasma backflow forming method for photoresist micro-convex lens array for mask	CN201010182280	Shanghai Institute Of Technical Physics, Chinese Academy Of Sciences
333	CN201927607	CN	CN Patents	Photovoltaic mercury-cadmium-tellurium infrared focal plane integrated with antireflection coating	CN201020224891	Shanghai Institute Of Technical Physics Chinese Academy Of
334	US7339216	US	US Grants	Vertical color filter sensor group array with full-resolution top layer and lower-resolution lower layer	US11/285470	Foveon, Inc.
335	US4618763	US	US Grants	Infrared focal plane module with stacked ic module body	US06/722776	Grumman Aerospace Corporation
336	US5332899	US	US Grants	System for converting an infrared image into a visible or near infrared image	US08/063333	Commissariat A L'energie Atomique
337	US20050012033	US	US Applications	Digital photon-counting geiger-mode avalanche photodiode solid-state monolithic intensity imaging focal-pl	US10/836896	Massachusetts Institute Of Technology
338	US20120230602	US	US Applications	Multi-bank tdi approach for high-sensitivity scanners	US12/230100	Lockheed Martin Missiles And Fire Control
339	US20060054780	US	US Applications	Multispectral imaging chip using photonic crystals	US10/941204	Raytheon Company
340	US20030230722	US	US Applications	Ambient-to-cold focus and alignment of cryogenic space sensors using uncooled auxillary detectors	US10/171956	Raytheon Company
341	US20100046853	US	US Applications	Multi-bank tdi approach for high-sensitivity scanners	US12/230100	Lockheed Martin Missiles And Fire Control
342	US6021172	US	US Grants	Active pixel sensor having intra-pixel charge transfer with analog-to-digital converter	US08/567469	California Institute Of Technology
343	US8153978	US	US Grants	Dual color/dual function focal plane	US11/715617	Oceanit Laboratories, Inc.
344	US7791026	US	US Grants	Microbolometer infrared security sensor	US11/817165	
345	CN101871817	CN	CN Patents	Hybrid-type pyroelectric uncooled focal plane detector and manufacturing process thereof	CN200910094401	Kunming Institute Of Physics
346	CN1900740	CN	CN Patents	High spectrum full polarization imaging remote sensing system	CN200510086926	Beijing Univ. Of Aeronautics And Astronatucis
347	US6833547	US	US Grants	Ambient-to-cold focus and alignment of cryogenic space sensors using uncooled auxillary detectors	US10/171956	Raytheon Company
348	CN1067176	CN	CN Patents	Device for detecting deviation of pin of integrated circuit, and its data processing method	CN95102426	Daheng New Epoch Technology, Inc.
349	US5084704	US	US Grants	Focal plane analog-to-digital converter	US07/473742	Grumman Aerospace Corporation
350	US8076629	US	US Grants	Photopumped semiconductor image amplifier comprising a waveguide with embedded quantum wells and a	US12/148970	Northrop Grumman Systems Corporation
351	CN101833347	CN	CN Patents	Temperature drift reducing device and control method thereof	CN201010161729	University Of Electronic Science And Technology Of China
352	US20080135757	US	US Applications	Infrared radiation imager having sub-pixelization and detector interdigitation	US12/033648	Drs Sensors & Targeting Systems, Inc.
353	KR20070083593	KR	KR Patents	Method and apparatus for controlling a lens, and camera module incorporating same	KR20077006885	Panavision Imaging, Llc
354	US6157042	US	US Grants	Optical cavity enhancement infrared photodetector	US09/185249	Xylon Llc
355	JP3112105	JP	JP Grants	Semiconductor optical element	JP26640091	Nippon Telegr & Teleph Corp Lt;nttgt;
356	JP7087406	JP	JP Applications	Signal read circuit and its drive system	JP22994693	Nec Corp
357	JP5107420	JP	JP Applications	Semiconductor optical element	JP26640091	Nippon Telegr & Teleph Corp Lt;nttgt;
358	US6563947	US	US Grants	Application specified integrated circuit for use in wavefront detection	US09/459170	Technolas Perfect Vision Gmbh
359	US7351972	US	US Grants	Infrared radiation image having sub-pixelization and detector interdigitation	US11/206937	Drs Sensors & Targeting Systems, Inc.
360	US20090091752	US	US Applications	Apparatus and a method for inspection of a mask blank, a method for manufacturing a reflective exposure m	US12/241614	Renesas Electronics Corporation
361	US7394052	US	US Grants	Parallel processing logic circuit for sensor signal processing	US10/208527	Nippon Telegraph And Telephone Corporation
362	US4954708	US	US Grants	Low distortion focal plane platform	US07/397808	Santa Barbara Research Center, A Corp. Of Ca, Cali
363	US7911600	US	US Grants	Apparatus and a method for inspection of a mask blank, a method for manufacturing a reflective exposure m	US12/241614	Renesas Electronics Corporation
364	JP2000098148	JP	JP Applications	Ultra-fast optical signal processing circuit	JP262835	Nippon Telegr & Teleph Corp Lt;nttgt;
365	US6101232	US	US Grants	Active pixel sensor with intra-pixel charge transfer	US08/558521	California Institute Of Technology
366	US5972108	US	US Grants	Method of preferentially-ordering a thermally sensitive element	US08/910687	Texas Instruments Incorporated
367	US20070069133	US	US Applications	Microbolometer ir focal plane array (fpa) with in-situ micro vacuum sensor and method of fabrication	US11/162849	Teledyne Scientific & Imaging, Llc
368	EP0507541	EP	EP Grants	Infrared focal plane array processor with integrator and low pass filter per pixel	EP92302814	Raytheon Company
369	US20120133776	US	US Applications	Low contrast midwave flir implementation	US13/032819	Nova Research, Inc.
370	WO2007038191	WO	WO Applications	Microbolometer ir focal plane array (fpa) with in-situ micro vacuum sensor and method of fabrication	US20060367	Rockwell Scientific Licensing, Llc
371	US5945673	US	US Grants	Thermal detector with nucleation element and method	US08/919654	L-3 Communications Corporation
372	US5929800	US	US Grants	Charge integration successive approximation analog-to-digital converter for focal plane applications using a	US08/906402	California Institute Of Technology
373	US5990481	US	US Grants	Thermal detector with preferentially-ordered thermally sensitive element and method	US08/919821	L-3 Communications Corporation
374	US20070012948	US	US Applications	Combined apd / pin ingaas photodetector with microlens structure and method of manufacture	US11/182493	Sensors Unlimited, Inc.
375	CN101561319	CN	CN Patents	Capacitive mems non-refrigerated infrared detector and preparation method thereof	CN200910085133	Peking University
376	WO02084740	WO	WO Applications	Multispectral monolithic infrared focal plane array detectors	US02114	Epir Ltd.
377	WO03106944	WO	WO Applications	Alignment of cryogenic infra-red sensors using uncooled auxillary detectors	US03189	Raytheon Company
378	US5844238	US	US Grants	Infrared imager using room temperature capacitance sensor	US08/622263	Sarnoff Corporation
379	US5315114	US	US Grants	Integrated circuit detector array incorporating bucket brigade devices for time delay and integration	US06/332039	Texas Instruments Incorporated; 13500 North Centra
380	US4703170	US	US Grants	Infrared focal plane module	US06/907408	Grumman Aerospace Corporation
381	US20050189492	US	US Applications	Multi-color infrared imaging device	US10/787907	Army, United States Of America As Represented By The Department Of The
382	JP3540687	JP	JP Grants	Optical signal processing circuit and its method	JP28114899	Nippon Telegr & Teleph Corp Lt;nttgt;
383	US8338200	US	US Grants	Frontside-illuminated inverted quantum well infrared photodetector devices and methods of fabricating the	US13/019658	L-3 Communications Cincinnati Electronics Corporation
384	WO02056076	WO	WO Applications	Fiber optic collimator array	US01513	Omm, Inc.
385	JPH11514084	JP	JP Applications	Non cooling focal plane arrangement sensor	JP51676497	Lockheed Martin Love Ares Imaging Systems Inc
386	JP2546514	JP	JP Grants	Signal read circuit and its drive system	JP22994693	Nippon Electric Co
387	US6483327	US	US Grants	Quadrant avalanche photodiode time-resolved detection	US09/409088	Globalfoundries Inc.
388	KR101158259	KR	KR Patents	Read out integrated circuit of infrared detection sensor and correcting method thereof	KR20110115234	Agency For Defense Development
389	WO2011064403	WO	WO Applications	Integrated circuit for spectral imaging system	EP2010068575	Imec
390	US5886659	US	US Grants	On-focal-plane analog-to-digital conversion for current-mode imaging devices	US08/916992	California Institute Of Technology
391	US20020025479	US	US Applications	Process for fabricating semiconductor integrated circuit device, and exposing system and mask inspecting m	US09/922656	Renesas Electronics Corporation
392	US20060038128	US	US Applications	Infrared radiation imager having sub-pixelization and detector interdigitation	US11/206937	Drs Sensors & Targeting Systems, Inc.
393	US6654057	US	US Grants	Active pixel sensor with a diagonal active area	US09/335182	Round Rock Research, Llc
394	US4611883	US	US Grants	Two-dimensional optics element for correcting aberrations	US06/551731	Hughes Electronics Corporation
395	WO2012005781	WO	WO Applications	Multi-mode seekers including focal plane array assemblies operable in semi-active laser and image guidance	US20110268	Raytheon Company
396	WO2012005781	WO	WO Applications	Multi-mode seekers including focal plane array assemblies operable in semi-active laser and image guidance	US20110268	Raytheon Company
397	US5572029	US	US Grants	Thermal isolation for hybrid thermal detectors	US08/488390	Texas Instruments Incorporated, A Corp. Of Delaware
398	US6522396	US	US Grants	Dual mode adaptive threshold architecture for 3-d ladar fpa	US10/040214	Raytheon Company

399	US20030160172	US	US Applications	Multispectral monolithic infrared focal plane array detectors	US09/834446	Epir Technologies, Inc.
400	US5308980	US	US Grants	Thermal mismatch accommodated infrared detector hybrid array	US07/928955	Amber Engineering, Inc.
401	US7808528	US	US Grants	Method and apparatus for an on-chip variable acuity imager array incorporating roll, pitch and yaw angle ra	US12/177048	Nova Research, Inc.
402	EP0768003	EP	EP Grants	Staring infrared focal plane array with on-focal plane array adaptive dynamic range control electronics	EP96915369	Raytheon Company
403	US5929433	US	US Grants	Reading device for a mosaic of electromagnetic detectors and detection system equipped with such a device	US08/880287	Commissariat A L'energie Atomique
404	JP2002258074	JP	JP Applications	Optical signal processing circuit	JP2001060967	Nippon Telegr & Teleph Corp Lt;nttgt;
405	WO9634490	WO	WO Applications	Staring infrared focal plane array with on-focal plane array adaptive dynamic range control electronics	US96058	Santa Barbara Research Center
406	US6921897	US	US Grants	Circuit and method for varying the integration time of moving charges from a photodetector	US09/666301	Lockheed Martin Corporation
407	US20040232335	US	US Applications	Microbolometer detector with high fill factor and transducers having enhanced thermal isolation	US10/441507	Flir Systems, Inc.
408	JP2001108861	JP	JP Applications	Optical signal processing circuit and its method	JP28114899	Nippon Telegr & Teleph Corp Lt;nttgt;
409	US5554849	US	US Grants	Micro-bolometric infrared staring array	US08/372982	Flir Systems, Inc.
410	US6121613	US	US Grants	Forward looking infrared device	US06/507628	Ol Security Limited Liability Company
411	US5081063	US	US Grants	Method of making edge-connected integrated circuit structure	US07/382388	Harris Corporation
412	IL124159	IL	IL Patents	Uncooled focal plane array sensor	IL124159	Bae Systems Information And Electronic Systems Integration Inc.
413	US6958478	US	US Grants	Microbolometer detector with high fill factor and transducers having enhanced thermal isolation	US10/441507	Flir Systems, Inc.
414	US6910096	US	US Grants	Sdram with command decoder coupled to address registers	US10/452339	Texas Instruments Incorporated
415	JP3515532	JP	JP Grants	Optical signal processing circuit	JP2001060967	Nippon Telegr & Teleph Corp Lt;nttgt;
416	US7408572	US	US Grants	Method and apparatus for an on-chip variable acuity imager array incorporating roll, pitch and yaw angle ra	US10/613126	Nova Research, Inc.
417	US5264699	US	US Grants	Infrared detector hybrid array with improved thermal cycle reliability and method for making same	US07/658985	Amber Engineering, Inc.
418	US6020216	US	US Grants	Thermal detector with stress-aligned thermally sensitive element and method	US08/920261	Texas Instruments Incorporated
419	US4831257	US	US Grants	Gate coupled input circuit	US06/912883	Loral Infrared & Imaging Systems, Inc.
420	WO2005062010	WO	WO Applications	Thermally stabilized radiation detector utilizing temperature controlled radiation filter	US20040406	Raytheon Company
421	EP0165312	EP	EP Applications	Pre-amplifier in focal plane detector array.	EP85900520	Irvine Sensors Corporation
422	US6809768	US	US Grants	Double slope pixel sensor and array	US09/494148	Foveon, Inc.
423	US5973311	US	US Grants	Pixel array with high and low resolution mode	US08/798852	Imation Corp., Minnesota
424	US6198101	US	US Grants	Integral charge well for a qwip fpa	US09/149483	Lockheed Martin Corporation
425	US20040061056	US	US Applications	Infrared detector array with improved spectral range and method for making the same	US10/259046	Flir Systems, Inc.
426	US5929434	US	US Grants	Ultra-low noise high bandwidth interface circuit for single-photon readout of photodetectors	US08/910342	Imperium (ip) Holdings
427	US4929913	US	US Grants	Gaas focal plane array readout	US07/393193	He Holdings, Inc., A Delaware Corp.
428	CN1193595	CN	CN Patents	Readout circuit of focal plane for quick-flasing charge amplifying structure and its readout method	CN03137083	Beijing Univ.
429	JP8050060	JP	JP Applications	Heat detector and manufacture therrof	JP106109	Texas Instr Inc Lt;tigt;
430	JP2000075333	JP	JP Applications	Optical signal processing circuit and optical signal processing method	JP24237598	Nippon Telegr & Teleph Corp Lt;nttgt;
431	CN1210548	CN	CN Patents	Reading circuit structure of double-colour line-array infrared focus plane detector	CN02145430	Shanghai Inst. Of Technical Physics, Chinese Academy Of Sciences
432	JP7324978	JP	JP Applications	Heat insulation structure for composite heat image pickup system and preparation there of	JP4469	Texas Instr Inc Lt;tigt;
433	CN101089658	CN	CN Patents	Method of non-refrigeration focal surface infrared cloud detection	CN200710025125	Meteorological College, Univ. Of Technology, Pla
434	US20120012748	US	US Applications	Architectures for imager arrays and array cameras	US13/106797	Pelican Imaging Corporation, California
435	JP7311083	JP	JP Applications	Manufacture of infrared detector and heat sensitive imaging system	JP4473	Texas Instr Inc Lt;tigt;
436	CN101420538	CN	CN Patents	Imaging circuit system for space multi-spectral linear array ccd remote sensor	CN200810239744	Beijing Space Electromechanical Research Institute
437	CN1412533	CN	CN Patents	Reading circuit structure of double-colour line-array infrared focus plane detector	CN02145430	Shanghai Inst. Of Technical Physics, Chinese Academy Of Sciences
438	JP2007527601	JP	JP Applications	Focal plane detector assembly of mass spectrometer	JP2007502023	Koporeishon Oi
439	CN100510781	CN	CN Patents	Method of non-refrigeration focal surface infrared cloud detection	CN200710025125	Meteorological College, Pla University Of Scienceand Technology
440	JP2002250828	JP	JP Applications	Optical signal processor and optical signal processing method	JP2002028826	Nippon Telegr & Teleph Corp Lt;nttgt;
441	WO0111694	WO	WO Applications	Flip-chip package with image plane reference	US00213	Silicon Film Technologies, Inc.
442	JP11295143	JP	JP Applications	Quick cooling cryostat for large infrared focal plane array	JP800017	Raytheon Co
443	US7309878	US	US Grants	3-d readout-electronics packaging for high-bandwidth massively paralleled imager	US10/901309	Energy, United States Department Of
444	CN101420538	CN	CN Patents	Imaging circuit system for space multi-spectral linear array ccd remote sensor	CN200810239744	Beijing Space Electromechanical Research Institute
445	EP1509754	EP	EP Applications	Focal plane processor for ir detection	EP03725553	Semi Conductor Devices (scd) Partnership
446	JP3520072	JP	JP Grants	Optical signal processor and optical signal processing method	JP2002028826	Nippon Telegr & Teleph Corp Lt;nttgt;
447	WO03103364	WO	WO Applications	Focal plane processor for ir detection	IL03004	Semi Conductor Devices (scd) Partnership
448	CN1945442	CN	CN Patents	System and method to correct for field curvature of multi lens array	CN200610142145	Asml Netherlands Bv
449	JP2006243734	JP	JP Applications	Wavelength-selective switch and integrated wavelength demultiplexer using stacked planar lightwave circuit	JP2006057054	Lucent Technol Inc
450	US5419637	US	US Grants	Method and apparatus for measuring temperature using an inherently calibrated p-n junction-type tempera	US08/147185	Ol Security Limited Liability Company
451	US4551629	US	US Grants	Detector array module-structure and fabrication	US06/572802	Irvine Sensors Corporation
452	JP4865365	JP	JP Patents	Wavelength-selective switch and integrated wavelength demultiplexer using stacked planar lightwave circuit	JP2006057054	Lucent Technol Inc
453	CN101561319	CN	CN Patents	Capacitive mems non-refrigerated infrared detector and preparation method thereof	CN200910085133	Peking University
454	CN201976195	CN	CN Patents	Continuous imager for all-time cloud coverage map	CN201020662494	Beijing Institute Of Spacecraft System Engineering
455	JP2007133382	JP	JP Applications	System and method to correct for field curvature of multilens array	JP2006274002	Asml Netherlands Bv
456	CN101078652	CN	CN Patents	Soi silicon wafer based non-refrigerating infrared sensor and its array and production method	CN200710098513	Tsinghua University
457	US5812190	US	US Grants	Detection method using distributed read and integration cycles for scanning camera and corresponding dete	US08/622609	Thomson-csf
458	EP1452895	EP	EP Applications	Optical signal processing apparatus and optical signal processing method	EP04012362	Nippon Telegraph And Telephone Corporation
459	US5452004	US	US Grants	Focal plane array imaging device with random access architecture	US08/079094	L-3 Communications Corporation
460	US5382797	US	US Grants	Fast cooldown cryostat for large infrared focal plane arrays	US07/632196	Santa Barbara Research Center
461	EP1452894	EP	EP Applications	Optical signal processing apparatus and optical signal processing method	EP04012361	Nippon Telegraph And Telephone Corporation
462	US7501634	US	US Grants	Method and system for distribution of an exposure control signal for focal plane arrays	US10/742285	Massachusetts Institute Of Technology
463	EP1246121	EP	EP Applications	Dynamically reconfigurable signal processing circuit, pattern recognition apparatus, and image processing ap	EP02252197	Canon Kabushiki Kaisha
464	WO2012005749	WO	WO Applications	Radiation-hardened roic with tdi capability, multi-layer sensor chip assembly and method for imaging	US20110007	Raytheon Company
465	EP0645925	EP	EP Applications	A signal readout circuit and its drive circuit.	EP94114560	Nec Corporation

466	US6822213	US	US Grants	Image sensors with improved signal to noise ratio	US10/440331	Vision - Sciences Inc
467	US20110303846	US	US Applications	Ir detector system and method	US13/202916	Selex Galileo Limited
468	CN102122762	CN	CN Patents	Millimeter-wave 360-deg omnidirectional-scan dielectric cylinder lens antenna	CN201110026393	Zhejiang University
469	US7417230	US	US Grants	Microbolometer focal plane array with temperature compensated bias	US11/530697	Fluke Corporation
470	US8179296	US	US Grants	Digital readout method and apparatus	US11/415007	Massachusetts Institute Of Technology, The
471	US5909026	US	US Grants	Integrated sensor with frame memory and programmable resolution for light adaptive imaging	US08/867835	California Institute Of Technology, California
472	US4902894	US	US Grants	Gate coupled input circuit	US06/912885	Honeywell Inc.
473	WO2012135542	WO	WO Applications	Dual well read-out integrated circuit (roic)	US20120312	Flir Systems, Inc.
474	JP2001289712	JP	JP Applications	Method for correcting video signal of infrared sensor and imaging system	JP2001058540	Boeing Co:the
475	US7750301	US	US Grants	Microbolometer optical cavity tuning and calibration systems and methods	US11/865927	Flir Systems, Inc.
476	WO9718589	WO	WO Applications	A dual-band multi-level microbridge detector	US96186	Lockheed-martin Ir Imaging Systems, Inc.
477	TW569006	TW	TW Patents	Millimeter wave imaging array	TW911219	Hrl Laboratories, Llc
478	US20040195509	US	US Applications	Qwip with tunable spectral response	US10/829574	Schilmass Co. L.l.c.
479	EP0849802	EP	EP Applications	Low-crosstalk differencing circuit architecture for integrated two-color focal plane arrays	EP973101	Raytheon Company
480	US5880777	US	US Grants	Low-light-level imaging and image processing	US08/632746	Massachusetts Inst. Of Technology, Massachusetts
481	EP0635885	EP	EP Applications	High density circuit assembly and method of forming the same.	EP93305793	Raytheon Company
482	WO2010053780	WO	WO Applications	Signal processor with analog residue	US20090623	Raytheon Company
483	US6900839	US	US Grants	High gain detector amplifier with enhanced dynamic range for single photon read-out of photodetectors	US09/675487	Altasens, Inc.
484	CN102692276	CN	CN Patents	One kind of non-refrigeration infrared acquisition aid	CN201110069273	Zhejiang Dali Technology Co Ltd
485	WO9728641	WO	WO Applications	Active pixel sensor array with multiresolution readout	US97010	California Institute Of Technology
486	EP0940029	EP	EP Applications	Active pixel sensor array with multiresolution readout	EP97903909	California Institute Of Technology
487	US3963920	US	US Grants	Integrated optical-to-electrical signal transducing system and apparatus	US05/556612	Hughes Missile Systems Company
488	US4684800	US	US Grants	Low-noise charge-injection method and apparatus for ir ccd scanning	US06/839398	He Holdings, Inc., A Delaware Corp.
489	JP3428374	JP	JP Grants	Millimeter wave image system	JP147045	Omron Corp
490	US4628933	US	US Grants	Method and apparatus for visual prosthesis	US06/758609	Regents Of The University Of California, The, A Corp. Of Ca
491	US4611124	US	US Grants	Fly's eye sensor nonlinear signal processing	US06/620211	The United States Of America As Represented By The Secretary Of The Air Force
492	US20100252736	US	US Applications	Imaging system	US12/745860	Selex Galileo Limited
493	US6547406	US	US Grants	Infra-red imaging systems and other optical systems	US09/529671	Qinetiq Limited
494	IL122556	IL	IL Patents	Low-crosstalk column differencing circuit architecture for integrated two-color focal plane arrays	IL122556	Raytheon Company
495	US8093559	US	US Grants	Methods and apparatus for three-color infrared sensors	US12/326883	Hrl Laboratories, Llc, California
496	CA2220834	CA	CA Patents	Enhanced quantum well infrared photodetector	CA2220834	Loral Vought Systems Corporation
497	US4956716	US	US Grants	Imaging system employing charge amplifier	US07/312262	Santa Barbara Research Center, California
498	US6884636	US	US Grants	Method of fabrication of an infrared radiation detector and infrared detector device	US09/861334	Canadian Imperial Bank Of Commerce, As Security Ag
499	CA2467160	CA	CA Patents	Microbolometer detector with high fill factor and transducers having enhanced thermal isolation	CA24671	Institut National D'optique
500	WO2012170946	WO	WO Applications	Low power and small form factor infrared imaging	US20120417	Flir Systems, Inc.
501	CN101958330	CN	CN Patents	Mercury cadmium telluride (hgcdte) photovoltaic detection chip for metalized common ion implantation wi	CN201010234857	Shanghai Institute Of Technical Physics, Chinese Academy Of Sciences
502	CA2467160	CA	CA Patents	Microbolometer detector with high fill factor and transducers having enhanced thermal isolation	CA24671	Institut National D'optique
503	IL122556	IL	IL Patents	Low-crosstalk column differencing circuit architecture for integrated two-color focal plane arrays	IL122556	He Holdings, Inc. Dba Hughes Electronics
504	US5983320	US	US Grants	Method and apparatus for externally configuring and modifying the transaction request response characteri	US08/910810	Rambus, Inc.
505	JP8062037	JP	JP Applications	Infrared detector	JP225737	Murata Mfg Co Ltd
506	JP57029005	JP	JP Applications	Optical branching filter	JP10357480	Nippon Telegr & Teleph Corp <ntt>

Enclosure 2

USPTO Data Base Search ROICs for IRFPAs Issued to Chinese Entities

Chinese ROIC and Infrared Focal Plane Array Patents

as of 3 January 2013

(This is not an exhaustive list, it is a sampling)

Publication No.	Country	Source	Title	APP No.	Assignee
CN102095501	CN	CN Patents	Irfpa (infrared focal plane array) and read-out circuit thereof	CN201010570406	Beijing Guangwei Integrated Circuit Inc.
CN102095501	CN	CN Patents	Irfpa (infrared focal plane array) and read-out circuit thereof	CN201010570406	Beijing Guangwei Integrated Circuit Inc.
CN102447845	CN	CN Patents	Infrared focal plane array readout circuit and adaptive power consumption regulation method thereof	CN201110299627	Peking University
CN2754070	CN	CN Patents	Background current inhibition reading-out circuit for infrared focal plane array	CN200420061801	Chongqing Univ.
CN101246047	CN	CN Patents	Infrared focal plane array dark field current compensation circuit and method thereof	CN200710049358	University Of Electronic Science And Technology Of China
CN100587419	CN	CN Patents	Infrared focal plane array dark field current compensation circuit	CN200710049358	University Of Electronic Science And Technology Of China
CN101635295	CN	CN Patents	Quantum well infrared focal plane array and manufacturing method	CN200910041873	Sun Yat-sen University
CN102494784	CN	CN Patents	Readout circuit and readout method for point-by-point bias correction data of infrared focal plane array im	CN201110419260	University Of Electronic Science And Technology Of China
CN102564599	CN	CN Patents	Readout circuit in infrared focal plane array and reference resistor of readout circuit as well as manufacturi	CN201110437202	University Of Electronic Science And Technology Of China
CN101635295	CN	CN Patents	Quantum well infrared focal plane array and manufacturing method	CN200910041873	Sun Yat-sen University
CN102589718	CN	CN Patents	Reading method of silicon substrate focal plane device	CN201210045860	Zhang Kang
CN102589719	CN	CN Patents	Reading circuit of silicon substrate focal plane device	CN201210045862	Zhang Kang
CN102214662	CN	CN Patents	Monolithic integration structure of un-cooled infrared focal plane array detector and manufacturing metho	CN201110105424	Peking University
CN1165078	CN	CN Patents	Pixel array layout method and metal wire structure for focal plane read-out circuit	CN01134707	Beijing University
CN102280456	CN	CN Patents	An infrared focal plane array probe integrated structure and preparation method	CN201110121051	Peking University
CN1348209	CN	CN Patents	Pixel array layout method and metal wire structure for focal plane read-out circuit	CN01134707	Beijing Univ.
CN202120912	CN	CN Patents	Non-refrigeration infrared focal plane array detector	CN201120147997	Ir Co Ltd Wuhan High German
CN101995295	CN	CN Patents	Non-refrigerating infrared focal plane array as well as preparation method and application thereof	CN200910090545	Peking University
CN102280455	CN	CN Patents	Non-a is made the cooled infrared focal plane array probe	CN201110120925	Ir Co Ltd Wuhan High German
CN101825516	CN	CN Patents	Device and method for testing infrared focal plane array device	CN201010161721	University Of Electronic Science And Technology Of China
CN102384789	CN	CN Patents	Infrared focal plane array device and manufacture method thereof	CN201010267982	Institute Of Microelectronics Chinese Academy Of Sciences
CN101242495	CN	CN Patents	Self-adapted digitalization method and its circuit for infrared plane array	CN200710020008	Nanjing University Of Science And Technology
CN100544411	CN	CN Patents	Self-adapted digitalization method and its circuit for infrared plane array	CN200710020008	Nanjing University Of Science And Technology
CN101740501	CN	CN Patents	Photoelectrical p-n junction modification method of ion implantation type hgcdte infrared focal plane	CN200910198960	Shanghai Institute Of Technical Physics, Chinese Academy Of Sciences
CN101740501	CN	CN Patents	Photoelectrical p-n junction modification method of ion implantation type hgcdte infrared focal plane	CN200910198960	Shanghai Institute Of Technical Physics, Chinese Academy Of Sciences
CN1477859	CN	CN Patents	Flash electric charge amplification structure focal plane reading-out circuit and its reset reading-out metho	CN03142613	Beijing Univ.
CN1203663	CN	CN Patents	Flash electric charge amplification structure focal plane reading-out circuit and its reset reading-out metho	CN03142613	Beijing Univ.
CN102565069	CN	CN Patents	Infrared microscopic non-destructive detector for integrated circuit	CN201110434080	Tianjin University Of Technology
CN102809436	CN	CN Patents	One kind of infrared row of focal-plane reading circuits	CN201210289417	Wuxi Meng Involved In Sensing Technology Co Ltd
CN101354288	CN	CN Patents	High speed low power consumption double-row line infrared focal plane read-out circuit	CN200810119756	Peking University
CN101354288	CN	CN Patents	High speed low power consumption double-row line infrared focal plane read-out circuit	CN200810119756	Peking University
CN102410880	CN	CN Patents	Infrared focal plane array blind pixel detection method based on integral time adjustment	CN201110223261	Chongqing University Of Posts And Telecommunications
CN101876570	CN	CN Patents	Readout integrated circuit with automatic blind-pixel elimination function	CN201010142926	Shanghai Institute Of Technical Physics, Chinese Academy Of Sciences
CN101358880	CN	CN Patents	Infrared focal plane read-out circuit and output stage structure thereof	CN200810119758	Peking University
CN202003246	CN	CN Patents	Bi-directional digital-type infrared focal plane temperature control system	CN201120047264	Overall System Of China Ministry Of Ordnance Industry
CN101358880	CN	CN Patents	Infrared focal plane read-out circuit and output stage structure thereof	CN200810119758	Peking University
CN101894848	CN	CN Patents	Tellurium-cadmium-mercury infrared focal plane integrated with anti-reflection film and method for prepa	CN201010198869	Shanghai Institute Of Technical Physics, Chinese Academy Of Sciences
CN1949508	CN	CN Patents	Infrared focal plane detector with antireflective convergence microlens and microlens preparing method	CN200610118053	Shanghai Inst. Of Technical Physics, Cas
CN101871817	CN	CN Patents	Hybrid-type pyroelectric uncooled focal plane detector and manufacturing process thereof	CN200910094401	Kunming Institute Of Physics
CN102509728	CN	CN Patents	Design and preparation method of non-refrigeration infrared detector	CN201110338955	Peking University
CN101894848	CN	CN Patents	Tellurium-cadmium-mercury infrared focal plane integrated with anti-reflection film and method for prepa	CN201010198869	Shanghai Institute Of Technical Physics, Chinese Academy Of Sciences
CN1696658	CN	CN Patents	Multichannel detector module on focal plane of infrared ray and installation method	CN200510025915	Shanghai Inst Of Tech Physics, C.a.s
CN201927607	CN	CN Patents	Photovoltaic mercury-cadmium-tellurium infrared focal plane integrated with antireflection coating	CN201020224891	Shanghai Institute Of Technical Physics Chinese Academy Of
CN101872804	CN	CN Patents	Plasma backflow forming method for photoresist micro-convex lens array for mask	CN201010182280	Shanghai Institute Of Technical Physics, Chinese Academy Of Sciences
CN1067176	CN	CN Patents	Device for detecting deviation of pin of integrated circuit, and its data processing method	CN95102426	Daheng New Epoch Technology, Inc.
CN101833347	CN	CN Patents	Temperature drift reducing device and control method thereof	CN201010161729	University Of Electronic Science And Technology Of China
CN101561319	CN	CN Patents	Capacitive mems non-refrigerated infrared detector and preparation method thereof	CN200910085133	Peking University
CN1193595	CN	CN Patents	Readout circuit of focal plane for quick-flasing charge amplifying structure and its readout method	CN03137083	Beijing Univ.
CN1210548	CN	CN Patents	Reading circuit structure of double-colour line-array infrared focus plane detector	CN02145430	Shanghai Inst. Of Technical Physics, Chinese Academy Of Sciences
CN101089658	CN	CN Patents	Method of non-refrigeration focal surface infrared cloud detection	CN200710025125	Meteorological College, Univ. Of Technology, Pla
CN1412533	CN	CN Patents	Reading circuit structure of double-colour line-array infrared focus plane detector	CN02145430	Shanghai Inst. Of Technical Physics, Chinese Academy Of Sciences

July 6, 2015

Sent via email to: publiccomments@bis.doc.gov and DDTCPublicComments@state.gov

Regulatory Policy Division
Bureau of Industry and Security
U.S. Department of Commerce
Room 2099B
14th Street and Pennsylvania Avenue NW
Washington, DC 20230

and

Office of Defense Trade Controls Policy
Directorate of Defense Trade Controls
Bureau of Political Military Affairs
Department of State
Washington, DC 20522

Subjects: RIN 0694-AF75 - Revisions to the Export Administration Regulations (EAR): Control of Fire Control, Range Finder, Optical, and Guidance and Control Equipment the President Determines No Longer Warrant Control Under the United States Munitions List (USML)

and RIN 1400-AD32 Amendment to the International Traffic in Arms Regulations: Revision of U.S. Munitions List Category XII

Dear Sir or Madam:

Fluke Corporation is pleased to have the opportunity to provide feedback on the Administration's proposed rule, Amendment to the International Traffic in Arms Regulations: Revision of U.S. Munitions List Category XII ("Proposed Rule") and complementary revisions to the Export Administration Regulations ("EAR Revisions"). This comment focuses on proposed changes to controls related to commercial thermal imaging cameras and addresses certain apparent shortcomings with respect to several of the stated goals of the Administration's rulemaking.

Fluke is concerned that the Proposed Rule identifies items for control on the United States Munitions List ("USML") that are not controlled on the Wassenaar Arrangement's Munitions List ("WAML"), does not establish a bright line between the USML and Commerce Control List ("CCL"), and controls items on the International Traffic in Arms ("ITAR") that are in normal commercial use and have foreign availability. Additionally, the EAR Revisions creates new controls on items that were not previously controlled, increases licensing requirements, removes availability of license exceptions and even imposes a presumption of denial for certain items, all of which appear to be contrary to Export Control Reform ("ECR").

The rewrite of USML Category XII and complementary EAR Revisions was initiated to protect the commodities and components most important to our military, while providing relief to companies struggling with outdated and overly burdensome regulations by placing less sensitive items on the more flexible CCL. This Proposed Rule falls significantly short of both of these goals.

Rather than providing a bright jurisdictional line between the CCL and the USML, the proposed revisions will lead to increased confusion, and enforce expansive restrictions that place heavier burdens on U.S. originated products. Many of these restrictions will place greater constraints on items that have non-military commercial applications and are readily available in foreign markets.

Under the current export control model, the U.S. thermal imaging industry is already at a competitive disadvantage against our foreign competitors. To be more competitive with foreign competitors, U.S. companies must find ways to reduce the impact of export control licensing hurdles. Therefore, many U.S. multi-national companies have chosen to move research, development and manufacturing to off-shore subsidiaries outside the U.S., and in some cases U.S. companies are fully outsourcing these functions to non-U.S. companies.

While the stated goal of maintaining strict export controls around thermal imaging technology is to preserve U.S. technological and tactical advantages, we are concerned that these changes will ultimately backfire, and lead to U.S. dependence on foreign technology. The impact of these decisions will be felt by the U.S. commercial base and the U.S. Government. Advanced thermal imaging technology and products will soon be dominated by foreign industries. U.S. consumers – including the U.S. Government - will have to pay more for products produced outside the U.S. and the U.S. Government may lose access to domestic sources of the newest technologies, may become reliant on foreign sources for a critical tactical capability, and our war-fighters ultimately may be put at a disadvantage. Additionally, the proposed licensing requirements for EAR items will dramatically limit U.S. companies ability to compete with European competitors.

Fluke Corporation supports the U.S. Government's desire to protect U.S. technology and national security. Export controls play an important part in this endeavor. However, if the regulations are not carefully drafted to limit the strictest controls to products and technology that are critical to our national security, are equally protected by our allies, are not already in commercial use, and are not readily available in foreign markets, export controls begin to have the opposite effect.

The Sensors and Instrumentation Technical Advisory Committee ("SITAC"), amongst other advisory and industry groups, have been working with the Departments of State, Defense and Commerce for several years to develop U.S. export controls for thermal imaging products and technology that meet U.S. national security needs , are aligned with the Wassenaar Arrangement controls, and are practical for the U.S. industry. The SITAC is comprised of representatives from the world's best thermal imaging companies, currently based in the United States. These representatives, mostly highly skilled engineers, have proposed regulations that meet the goals of U.S. export control reform, but very few, if any of these recommendations are reflected in the proposed rules. Fluke Corporation supports technical recommendations by the SITAC and other technical advisory committees and respectfully asks that DDTC and BIS accord the

recommendations of these committees greater weight when developing alternatives to the current proposed changes to Category XII and complementary provisions of the EAR.

A. HARDWARE - INFRARED FOCAL PLAY ARRAYS, CORES AND CAMERAS

I. The Proposed Rule Identifies Items for USML Control that are not controlled on the Wassenaar Arrangement's Munitions List

Category XV of the WAML controls, inter alia, Infrared or thermal imaging equipment, specially designed for military use, and specially designed components and accessories therefor. A number of the items described in the Proposed Rule are in normal commercial use throughout the world and are not currently controlled on the USML nor are they described on the WAML. Specific examples of these items are described below in section III.

II. The Proposed Rule Does Not Establish a Bright Line Between the USML and CCL

a. Integration of an IRFPA into a permanent encapsulated sensor assembly as a control parameter in Category XII (c) is not technically sound and will increase the need for CJs

Instead of providing a "bright line" for Infrared Focal Play Arrays ("IRFPAs"), the attempt in subparagraph (c)(2)-(6) to draw a jurisdictional line for IRFPAs by distinguishing those in a "permanent encapsulated sensor assembly" from those that are not creates a vast gray zone and an increased need for Commodity Jurisdiction Requests ("CJs"). This approach is flawed on several levels:

1. It has nothing to do with utility of IRFPAs for military versus civil applications. Packaging/encapsulating an IRFPA does nothing to make it more useful or appropriate for civil applications or any less useful or appropriate for military applications. Indeed, IRFPAs have well-established utility in both civil and military applications; they are inherently dual use and do not warrant control on the USML Attempting to draw a line between the "raw" IRFPA and a packaged IRFPA does nothing to change the fact that IRFPA's are inherently dual use items.

2. There's no clear reason why the controls or jurisdictions should be different for the packaging versus the IRFPA die. The IRFPA package/encapsulation and the technology to make it is generally equally important in achieving the overall function and performance of an IRFPA as the technology to make the FPA die that goes into the package. In the case of uncooled microbolometers, without the vacuum package there is no meaningful IR responsivity whatsoever. Said another way, without the vacuum package, the FPA die is really not an IRFPA at all. In the case of cooled, photon-detection IRFPAs, without the package the device could not be cooled to the necessary operating temperature without moisture or frost that would render it inoperable. (As a side note, it could be argued that, for at least these reasons, the pre-packaged/encapsulated arrays would be more properly classified and treated as components, not finished IRFPAs.)

3. The gray zone created by the proposed regulations would be especially difficult for wafer-level or pixel-level packaged microbolometer IRFPAs. With wafer-level and pixel-level integral vacuum packaging technologies, the FPA die itself forms a portion of the vacuum package. With wafer-level packaging, the FPA wafer is mated and sealed to a corresponding "top-cap" wafer that is manufactured using similar IC and MEMS processing technologies as are used for the underlying ROIC/FPA wafer—often all of the steps being accomplished in the same IC/MEMS foundry.[1] There are packaging features and technology intermixed into the underlying FPA/ROIC wafer (e.g., the die itself forms the lower portion of the package, metal seal rings and getter layers are deposited on it, etc.) and, vice versa, there are pixel/FPA features in the top-cap window that are integral to the underlying FPA (e.g., features that complete the shielding for "blind" reference pixels that are needed for ambient temperature compensation.) With pixel-level packaging, MEMS processing techniques are used to create a tiny, individual micro-package around each pixel. Incidentally, the most advance work on pixel-level packaging for IRFPAs appears to be occurring outside the U.S.[2] Further, because of the precise spatial registration and correspondence needed amongst all the features, the entire set of mask designs, from the first ROIC layer all the way through to the last top-cap layer, are generally contained in a single CAD file. The proposed regulations would create an immediate need for numerous CJs to resolve this ambiguity for wafer-level and pixel-level uncooled microbolometer IRFPAs and the associated technologies to make them.

4. It is not clear that technology to create the high-integrity vacuum packaging that's needed for IRFPAs is any more or less widely available than the technology to make the pre-packaged FPA die. Indeed, there are many outside-the-U.S. ("O.U.S.") sources of IRFPAs, including several in non-WA countries (more on this below).

Note 1 to paragraph (c) doesn't help resolve any of the above and adds its own problems by not being clear (no bright line) in the following ways:

1. Regarding what constitutes "direct access to the IRFPA" and/or how to prevent it. Certainly "direct access" cannot mean optical or electrical access or there would be no way to use the encapsulated IRFPA.

2. Regarding what level of effort, due diligence and engineering is required to render an IRFPA sufficiently tamper proof to meet the requirements of Note 1.

---

[1] Early (1993) Honeywell patent on wafer level packaging for IRFPAs provides good overview of the concept. Of note, this is referenced by 110+ other patents, including numerous from outside the US; a good understanding of WLP can be obtained by following these 110+ links, available at https://www.google.com/patents/US5895233?dq=US5895233&hl=en&sa=X&ei=VyeTVb3VHJHaoASVkZnAAQ&ved=0CB0Q6AEwAA

[2] An example of LETI/ULIS pixel level packaging is available at http://proceedings.spiedigitallibrary.org/proceeding.aspx?articleid=1387339&resultClick=1

3. Regarding who has the burden of proof, what level of testing and analysis would be sufficient, and what the criteria would be required to meet Note 1.

All of the above would lead to multiple CJ requests to verify whether there is direct access to the IRFPA.

The definition of "multispectral" and associated controls proposed in (c)(6) are vague and thus do not provide a "bright line." The term "discrete output" in the definition of "multispectral" should be clarified. It is unclear if the following examples of IRFPAs would fall within this definition: (1) a broadband IRFPA integrally fitted with a filter or lenslet array with different band-pass characteristics for each of the lens/filter elements; i.e., analogous to a Bayer filter; (2) a microbolometer IRFPA where pixels have varying resonant absorption cavities that create varying spectral response.

III. The Proposed Rule Controls Items on the ITAR that are in Normal Commercial Use

a. Incorporation of an IRFPA into an infrared imaging camera core as a control parameter is not technically sound and will increase controls on cores in normal commercial use

The proposed inclusion of infrared camera cores in sub-category (c)(12) adds items on the USML that are in normal commercial use and creates ambiguity. Like IRFPAs, "cores" have well-established utility in both civil/commercial and military applications; they are inherently dual use and do not warrant control on the USML. Most importantly, IRFPAs are widely available, including in non-WA countries.[3]

---

[3] China (GWIC, etc) – Excerpts: ***Currently more than five Chinese companies*** and institutions design and fabricate uncooled infrared focal plane array. Some devices have sensitivity as high as 30 mK; the largest array ***for commercial products*** is 640×512 and the smallest pixel size is 17 µm. See Uncooled infrared focal plane array imaging in China.

China – (DALI) Excerpt: Since 2006, Dali…has brought several uncooled detectors into mass production, including 35um 384x288, 25um 160x120, 384x288, 640x480, and 17um 384x288, 640x480. See Uncooled infrared detector and imager development at DALI Technology.

Turkey (Mikrosens) – See A miniature low-cost LWIR camera with a 160×120 microbolometer FPA.

Israel (SCD) – Very wide range of IRFPAs commercially available, SWIR, MWIR and LWIR, **up to 1024x768**. (Note, website is for "SCD-USA LLC" but this is just a US sales/support office, these IRFPAs are all developed and manufactured in Israel). See http://www.scdusa-ir.com/ir-sensors/

France (ULIS) – In volume production with a wide range of a-Si uncooled microbolometer IRFPAs, **up to 1024x768**. See http://www.ulis-ir.com/index.php?infrared-detector=products.

France (Sofradir) – Very wide range of photon-detector IRFPAs for MWIR and LWIR – MCT, InSb, InGaAs and QWIP. See http://www.sofradir.com/.

Further (c)(12) has the following additional problems:

1. It appears as though a "core" ("e.g., module, engine, kit") is intended to represent some key subset of a camera but, defined as is proposed, **there is no meaningful difference between a "core" and a general-purpose camera**—certainly no "bright line." This flaw ultimately makes (c)(12) both potentially overly broad (capturing civil/commercial cameras) and ineffective (failing to capture possible defense items). Consider the following example: A "core" consisting of a 1024x768 pixel microbolometer IRFPA along with a specially designed lens and PCA/electronics. Suppose the electronics include an input connector for power and an output connector that provides imagery via a standard interface and format (e.g. HDMI). This "core" would appear to be captured under subparagraph (iii) of (c)(12). Consider now a general-purpose IR camera made from this core by adding a housing that is back-filled with epoxy potting compound so the IRFPA, lens and PCA cannot be removed without destruction or damage to the "core." Following Note 2 to paragraph (c)(12), this general-purpose camera would now be EAR controlled; however, there is no meaningful functional difference whatsoever between it and its ITAR-controlled "core." Ironically, the added ruggedness provided by the housing and potting might in fact make this "camera" even more suitable for military uses than its "core."

2. Indeed, *any* infrared camera, system or product will inevitably include at least enough electronics "to enable as a minimum the output of an analog or digital signal once power is applied;" i.e., to comprise a "core." Therefore *any* such camera, system or product that has an IRFPA or other characteristic that meets the criteria identified in the eleven sub-items to paragraph (c)(12) will ultimately be ITAR controlled unless modified in some way (i.e., made tamper proof) to meet Note 2 to paragraph (c). There are numerous existing civil/commercial IR camera systems that are not presently tamper proof per Note 2 that will become ITAR controlled under the proposed paragraph (c)(12). One example is the Fluke TiX1000 (1024x768 civil/commercial camera).[4]

3. Modifying civil/commercial IR camera designs to make them tamper proof per Note 2 to paragraph (c) would be a tremendous burden on U.S. industry that would make U.S. IR camera products more difficult and expensive to manufacture and difficult or impossible

---

Belgium (Xenics) -- 640 x 512 InGaAs (SWIR) detector with 20 µm pixel pitch. See http://www.xenics.com/en/xfpa-17-640-ln2; http://www.xenics.com/en/xlin-detector-series; http://www.xenics.com/en/xlin-17-3000

Germany (Bosch) – Low-cost 82x62 uncooled thermo-diode IRFPA. See http://www.bosch-semiconductors.de/media/pdf_1/press_releases/SMO130_Productinfo_1402.pdf.

Canada (INO). See http://www.ino.ca/media/187149/datsheet-384x288-fpa.pdf.

South Korea (I3 System) – Locally developed cooled MWIR/LWIR and uncooled LWIR. See http://www.i3system.com/eng/n_product/product111.html; http://www.i3system.com/eng/n_product/product121.html

[4] See, for example, above references for ULIS and SCD.

to service—ultimately making U.S. products less competitive globally. Further, it is not at all clear (no bright line) on what level of effort, due diligence and engineering is required to render an item sufficiently tamper proof to meet the requirements of Note 2.

4. The weapon shock load event control parameter described in subparagraph (ii) is problematic on many levels. Many civil/commercial IR camera systems have rigorous ruggedness requirements. Firefighting cameras must work in very harsh environments and are designed to survive very rough handling. Many portable thermography cameras for industrial applications are specified to survive a two-meter drop.[5] Because of the aforementioned problems with the ambiguity between cameras and cores, it is not necessarily clear these civil/commercial products are not "cores" captured by (c)(12). These civil/commercial cameras have generally not been tested against the proposed weapon shock parameters so it is not known if they would pass or fail. Numerous questions will be raised if the proposed control went into effect:

    a. Would the manufacturers of these cameras need to test their existing and/or new designs to prove they cannot survive this weapon shock specification?

    b. Who has the burden of proof and what level of testing and analysis is sufficient? What equipment is needed to do the testing?

    c. What if some units of a particular model survive and some units fail due to normal manufacturing variation?

    d. Would assuring a model doesn't pass the weapon shock test make it less rugged and potentially less competitive than competing O.U.S. models that don't face this requirement?

    Additionally, this parameter would be especially troublesome in applications where ruggedness is a perceived advantage. Further, it is not necessarily clear how to ensure an IR camera reliably fails the weapon shock test but meets the ruggedness requirements of the aforementioned civil/commercial applications. Achieving this would certainly add

[5] Some examples of rugged civil/commercial cameras that meet 2M drop, etc. are available at:

http://en-us.fluke.com/products/infrared-cameras/fluke-ti125-infrared-camera-30-hz.html

http://en-us.fluke.com/products/infrared-cameras/fluke-ti400-infrared-camera.html

http://www.flir.com/fire/content/?id=69019

http://www.bullard.com/V3/products/thermal_imaging/fire_service/

http://www.isgfire.co.uk/

https://www.scottsafety.com/en/us/Pages/ProductDetail.aspx?productdetail=Eagle+Attack+Thermal+Imaging+Camera

cost and complexity to U.S. products versus O.U.S. products that don't face this requirement. Finally, at least one U.S. manufacturer has filed for patents[6] in this area, so this proposed control could even end up favoring one U.S. manufacturer versus other U.S. manufacturers.

5. In subparagraph (iii), referencing both (c)(2) and (c)(5) adds uncertainty to exactly what the "permanent encapsulation" aspect is intended to distinguish. Given that microbolometer IRFPAs must be encapsulated simply to function, any microbolometer-based "core" would always be encapsulated, so the introduction of a control parameter based on encapsulation introduces confusion. It is not clear what is being addressed with the reference to (c)(2) versus (c)(5). There are analogous issues with the other sensor types (photon detector, etc.) in subparagraphs (iv) – (xi). At minimum, it's unclear and unnecessarily complex.

6. Paragraph (c)(13) uses terms that are not clearly defined and that potentially capture civil/commercial products:

    a. Numerous handheld/portable industrial thermography cameras have a camcorder style eyepiece that, without further clarification, probably would be considered a near-to-eye display.[7] This is needed for adequate viewing while outdoors in bright sunlight conditions. It is not clear whether these systems would be considered "monoculars" or "video-based articles having a separate near-to-eye display?" There is no definition of a "video-based article?" The "near-to-eye display" term is also used in (c)(18), introducing the same uncertainties to that sub-category.

    b. Many IR cameras (and visible cameras) have connectivity options that enable them to work with commercial, off-the-shelf head-mounted display glasses (e.g. such as google glass, gaming systems, etc.), either directly or indirectly via connections with smartphones or other devices that can easily be coupled with the above commercial displays. This control needs further work to distinguish widely available commercial/consumer head-mounted display options such as the above from those used for military purposes.

7. In subparagraph (c)(16)(iii), any general-purpose IR camera could potentially be considered appropriate equipment for a "fixed-site reconnaissance, surveillance or

---

[6] See US20130286215, available at https://www.google.com/patents/WO2014007888A2?cl=en&dq=infrared+thermal+imager+with+accelerometer&hl=en&sa=X&ved=0CDsQ6AEwBGoVChMIlciR6eOSxgIVikuSCh3lmwDL

[7] Some examples of Civil/Commercial IR cameras with near-to-eye display are available at:

http://en-us.fluke.com/products/infrared-cameras/tix1000-infrared-camera.html

http://www.flir.com/science/display/?id=46792

http://www.flir.com/ogi/display/?id=55671

perimeter security system." It is generally the peripheral equipment (e.g. housings, interfaces, back-end software/analytics, etc.) that distinguish such systems from commercial or industrial systems for process control, R&D, etc. Because of this, as presently written, the proposed control potentially captures any IR camera that meets the pixel/format specification—perhaps even hand-held, portable thermography cameras (e.g. if fixed-mounted on a tripod, enclosed in a housing and/or connected to line power). Further work is needed here to clarify this. As is discussed in more detail below, this subparagraph is an example of using detector format as a control parameter that, to be balanced and effective, needs a clear, objective process for periodically reviewing and adjusting the parameter as the O.U.S. availability of larger format IRFPAs inevitably advances.

8. Paragraph (c)(19) appears to be intending to control scene projector equipment that is used for hardware-in-the-loop testing of military systems; however it is overly broad as written. It should be clarified to make it clear it does not include equipment such as calibrated blackbodies that are routinely used to project radiometrically calibrated *uniform* scenes in the manufacturing and calibration processes for virtually all IR imagers and radiometric thermography cameras.

b. ***The attempt to distinguish and divide jurisdiction of packaged IRFPAs in Category XII(c) based on number of detector elements is flawed and will likely capture items that are not controlled on the Wassenaar Arrangement or are in normal commercial use***

While it is generally reasonable and accepted that systems using larger-format IRFPAs can convey some advantages for warfighters versus systems with smaller-format IRFPAs, for this to be effective as a unilateral U.S. control, it is crucial that it be set at the right level -- a level that accurately reflects what is available in the U.S. versus outside the U.S. ("O.U.S."). Further, for this to be appropriately balanced there would need to be a clear, objective process for periodically reviewing and adjusting the parameter as the O.U.S. availability of larger format IRFPAs inevitably advances. As it is, the proposed regulation offers no such review/adjustment process.

The proposed limits in (c)(3) and (c)(4) appear arbitrary and inconsistent. With appropriate scanning, a 640-1 linear array can easily be used to create a 640xN two-dimensional image. With no consideration of other factors such as frame rate, it is illogical to suggest a 129x2 pixel IRFPA conveys a significant military advantage versus a 640x1 array.

The proposed limit of 328,000 detector elements in (c)(5) is not appropriate given the significant O.U.S. availability of larger IRFPAs (e.g. 1024x768).[8] These items are in normal commercial use outside the U.S. and are not controlled on the Wassenaar Munitions lists.

[8] See, for example, above references for ULIS and SCD.

c. ***The proposed controls for IRFPA wafers and Readout Integrated Circuits are overly broad and capture items in normal commercial use and readily available O.U.S.***

The proposed controls for IRFPA wafers and Readout Integrated Circuits ("ROICs") in subparagraphs (e)(3), (4) and (5) are overly broad and flawed for similar reasons as identified above. In particular:

1. Their wide availability from sources outside the U.S. All of the O.U.S. IRFPAs previously noted have ROICs that originate from outside the U.S. Further, there is widespread literature in the public domain about the details of ROIC design.[9]

2. Here, yet again, is another example of using detector format as a control parameter, which to be balanced and effective needs a clear, objective process for periodically reviewing and adjusting the parameter as the O.U.S. availability of larger format IRFPAs inevitably advances. Further, there is no clear reason why the control limit should be different for ROICs than for the IRFPAs associated with them (19,200 pixels versus 328,000 pixels).

3. It appears (e)(4)(iii) is intended to leave 160x120 and smaller format microbolometer ROICs to be controlled by the EAR. If that is the case, the parameter should be increased somewhat, to at least 21,000 pixels, to accommodate the extra reference and boundary rows and columns that are typically included on IRFPAs. Alternately, 32,768 might be more appropriate given the widespread use with consumer smartphones of 208x156 format IRFPAs.

4. Further, it is not clear what ROICs are captured in (e)(5) that are not already captured by (e)(4). Having multiple subparagraphs that potentially capture the same ROIC

---

[9] For example, a quick search of SPIE's digital library with the terms "infrared" and "ROIC" yields 456 hits.

http://proceedings.spiedigitallibrary.org/solr/searchresults.aspx#q=infrared%20ROIC&SearchSourceType=1

A few specific examples

Turkey –

A 1280×1024-15µm CTIA ROIC for SWIR FPAs

A 640×480-17µm ROIC for uncooled microbolometer FPAs

MT3825BA: a 384×288-25µm ROIC for uncooled microbolometer FPAs

MT3250BA: a 320×256-50µm snapshot microbolometer ROIC for high-resistance detector arrays

MT6415CA: a 640×512-15µm CTIA ROIC for SWIR InGaAs detector arrays

MT6425CA: a 640 x 512-25µm CTIA ROIC for SWIR InGaAs detector arrays

(component) only serves to makes these already complex regulations even more complex and confusing.

5. Subparagraph (e)(6) is problematic on several levels. The multiple references to paragraph (c) make it confusing and unclear.

    a. A typical "vacuum package" for a microbolometer IRFPA consists of some kind of package body (typically metal or ceramic) and an IR-transparent window. Neither of these components is, by itself, a "vacuum package or sealed enclosure," so apparently neither would be controlled in this subparagraph. These components do become a "vacuum package" when sealed together and evacuated—ostensibly with an IRFPA die inside. However, once that is done, the combination of package body, window and IRFPA die is actually an encapsulated IRFPA which is already addressed in paragraph (c). So, as written, subparagraph (e)(6) either misses its mark and is a null set, or is redundant to paragraph (c).

    b. On the other hand, if one assumes that (e)(6) was intended to refer to the package body (or window), that still does not fully resolve the ambiguities. Consider, for example, a package body designed for a 320x240 microbolometer IRFPA die that is controlled in (c)(2). Whether or not the package is controlled in this subparagraph then hinges on whether it is "specially designed" for incorporation or integration *into any* article controlled in paragraphs (a), (b) or (c).

        The IRFPA die itself is controlled in (c), so following one confusing and circular—but possible—path, the classification then hinges on whether the package was "specially designed" for this IRFPA and, assuming it was, whether the package is being incorporated "into" a controlled item. If "into" is interpreted narrowly, it could be argued that the package does not get incorporated or integrated "into" the die, so therefore, the package is not controlled by this subparagraph. On the other hand, taking a slightly broader view of "into," the package is certainly integrated <u>with</u> the die, in which case the package would be controlled. At a minimum, the intent behind this paragraph should be clarified, or possibly it should be removed.

    c. Assuming the previous two items are addressed, another example illustrates yet another problem with this subparagraph. Consider a package body and/or window used with a 1024x768 microbolometer IRFPA. Since this IRFPA die is controlled in (c)(2) and, when packaged, it is controlled in (c)(5), it appears this package and window would be controlled by this subparagraph. However, there is a strong argument that the package for a microbolomer would not meet the "specially designed" test, because the only difference between a package for a smaller and a larger format microbolometer consists of adjustments for "fit" only.

        A package and window for a 1024x768 IRFPA are simply slightly larger versions of what would be used for smaller microbolometer IRFPAs (e.g. with fewer than 328,000 pixels). The technology and know-how needed to make them are identical, except for adjustments for "fit", as defined in connection with the

> "specially designed" release paragraph (b)(3). Indeed, a package and window developed for a 640x480 IRFPA with 25-micron pitch could potentially be used very effectively for a 1024x768 or larger IRFPA with 12-micron pitch, with adjustments only to accommodate the different size. In this case, assuming the 640x480 package was not "specially designed" for some other article in (a), (b) or (c), it would be EAR controlled while there appears to be an intent to control its 1024x768 counterpart under the ITAR. However, the "catch-and-release" provisions of the "specially designed" provisions would appear to make this category, and subparagraph (e)(6) a null set, at least with respect to microbolometers.

Paragraph (e)(10) is unclear and overly broad. Virtually any IR camera that uses an IRFPA will have some portion of its electronics that "drive," "control" and/or "image process" data from the IRFPA. Since the electrical interface of an IRFPA varies at least in details from manufacturer to manufacturer and model to model, at least some portion of the IR camera electronics is always unique for interfacing to a particular IRFPA, so there is a good chance that these items would be considered "specially designed," but it is likely that CJs would be required to clarify what is and is not controlled. Thus, as written, subparagraph (e)(10) could control at least some portion of the electronics of any IR camera that uses an IRFPA controlled in this category – even an EAR-controlled camera that has been decontrolled. It is not clear the extent to which the traditional "see-through" concept would serve to pull back an otherwise EAR camera that contains such drive, control, or image processing electronics, or whether Category XII should be interpreted more along the lines of the EAR – i.e., that classification of an end-item is done based on its characteristics, not based on incorporated controlled components.

If the see-through concept applies, in order for a civil/commercial IR camera to be EAR controlled, a manufacturer would need to identify exactly which portion of the camera electronics is "specially designed" for the IRFPA (which is not at all clear), and then make that portion tamper proof according to the Note to paragraph (e). As discussed above, how to make something sufficiently tamper proof is not at all clear. Worse still, a manufacturer would also need to determine whether the electronics that "drive," "control" and/or "image process" data from the IRFPA are "specially designed" for the IRFPA die controlled in (c)(2) or the packaged/encapsulated IRFPA controlled elsewhere in (c); e.g., in (c)(5). If anything, the electronics really has little to do with the packaging and is more logically associated with the IRFPA die controlled in (c)(2). Since (c)(2) controls practically every IRFPA the end result of the analysis could be that every IR camera would be caught up in this conundrum. In light of the apparent intent to decontrol certain types of cores and cameras, we doubt that this is what DDTC and the interagency partners intended, but greater clarification of the proper approach to classification, and the applicability of the "see-through" concept is required to avoid uncertainty and unintended consequences.

Subparagraph (e)(11)(ii) is unclear and overly broad. There is no definition of what constitutes a "target" in the explanatory note. It is not clear whether this refers to tactical "targets" associated

with weapons control or aiming systems, or if it could mean "targets" such as deer, children, or other vehicles, in the context of collision avoidance systems for civilian automobiles. The use of "multi-sensor fusion" as a control criteria seems to ignore numerous examples of civil/commercial IR cameras that already include what industry would consider "multi-sensor fusion," and which have a wide range of image processing approaches for combining the imagery, not just "image blending."[10] Some examples include picture-in-picture, alpha-blending (averaging) and threshold-based algorithms applied on a pixel-by-pixel basis. In some cases a high spatial frequency filter is applied to the image data from one or more sensor (e.g. to extract edges) and then the filtered (edge) data is combined with data from the other sensor(s). It is not at all clear if all of these approaches would be considered "image blending." If not, to achieve or retain EAR control for these IR cameras, it appears a manufacturer would be left to identify and tamper proof the portions of the camera electronics that provide these functions—which has its own set of problems, as already discussed above.

Paragraph (e)(12) is also unclear and overly broad. Existing civil/commercial cameras include camcorder style eyepieces that may or may not be "near-to-eye" displays. This was already discussed in detail with respect to Paragraph (c)(13).

B. TECHNOLOGY AND DEFENSE SERVICES

Control of thermal imaging technology is a challenge under the current ITAR and EAR. Given that the CCL controlled cameras contain USML controlled IRFPAs there is already a jurisdictional split for hardware and related technology. The EAR Revisions only compound the confusion by further splitting jurisdiction. Additionally, the proposed revisions are so complicated that exporters will be forced to submit CJs in order to find the bright line.

I. The Proposed Rule Adds Complexity to Paragraph (f) and Does Not Establish a Bright Line Between the USML and CCL

The complex and interwoven notes to paragraph (f) appear to be an attempt at clarifying and distinguishing technology to *make* IRFPAs from technology needed to *use* them. This added complexity is only necessary because of the proposed structure in (c) and (e) that would keep unpackaged IRFPAs and wafers controlled under the ITAR while some packaged/encapsulated IRFPAs would be controlled under the EAR. Unfortunately, the proposed language misses its mark and only adds to lack of clarity and issues identified in (c) and (e). U.S. IRFPA manufacturers will not gain any benefit from certain IRFPAs and cores being EAR-controlled if

---

[10] Some examples of civil/commercial systems with multi-sensor fusion that may go beyond mere "blending" are available at:

http://en-us.fluke.com/products/infrared-cameras/fluke-ir-fusion-technology.html

http://www.flir.com/instruments/display/?id=61194#videobox

the information and software needed to use them efficiently and effectively remains ITAR controlled. It needs to be made clear that the IRFPA maker can provide a complete set of operating information for the IRFPA. Some examples of essential operating information include:

- Definition of and spec limits for all electrical I/O connections, biasing, integration, etc.
- Format and timing of input and output data/interfaces
- Definition and operation of any on-chip control or status registers
- Operating and calibration info for any on-chip non-uniformity correction and/or ambient temperature compensation functionality
- Application notes that describe how to adjust the inputs (bias and integration settings, etc.) to optimize performance (e.g. for best NETD and/or scene dynamic range) over the specified operating ambient temperature range
- Mechanical drawings and/or CAD models showing FPA location and optical center referenced to mounting datum
- Circuit simulation models (e.g. SPICE models)
- Assembly and handling requirements/limits for mounting and connection to PCA
- Performance specifications (e.g., NETD, responsivity, uniformity, scene dynamic range, pixel operability, vacuum lifetime, pixel time constant)
- FPA test and/or calibration data – e.g. output data obtained by operating FPA over range of ambient temps and scene temps

Part A of note 2 to paragraph (f) and the accompanying *"note to paragraph A of note 2 to paragraph (f)*" defines the information and data that would and would not be subject to ITAR technical data controls. In a nutshell, it is too vague regarding what is ITAR controlled and still leaves a significant gray zone (no bright line). In particular:

1. The exclusion in "Note to paragraph A of note 2 to paragraph (f)" limiting to "basic" operating instructions is vague and too narrow. Distinguishing between a "basic" operating instruction from, say, an intermediate or advanced one is completely subjective and there is no "bright line." The IRFPA user (e.g. camera developer) needs access to sufficient information to effectively use the part or it is totally useless. Instead, all operations technical data should be excluded.

2. Requiring that the information *not* include "design methodology," "engineering analysis" or "manufacturing know-how" is also too vague and limiting. While these terms are, in fact, defined in part 125.4, the definitions mostly just provide examples of information that *would* be encompassed by these terms (and thus could not be provided via EAR controls) without providing a very clear picture of what is not encompassed and *can* be provided. Worse still, "engineering analysis" specifically includes simulation and computer models—both of which are important elements for efficient and effective *use* of an IRFPA. An IRFPA user (e.g. IR camera designer) needs to understand the overall

architecture of the device and have access to, at least, a circuit simulation (e.g. SPICE) model of the IRFPA to enable efficient and effective design of an IR camera system.

3. The note addresses *technical data* but is completely silent on *defense services*. The definition of defense services includes "furnishing of assistance (including training) … in the … *testing, operation, or use* of defense articles." A U.S. IRFPA manufacturer cannot compete effectively if it cannot provide customer support and assistance on how to use or operate its IRFPAs. We recognize that DDTC has also proposed revised definitions of "defense services", but those changes are not yet implemented; additional guidance in Category XII about the exclusion of the provision of assistance with the operation of an IRFPA from the scope of Category XII(f) would provide needed clarification.

Part B of note 2 to paragraph (f) appears to be inconsistent with proposed definition changes that would remove software from the scope of "technical data" under the ITAR. See RIN 1400-AD70, revised definition of "technical data." We assume that the final Category XII controls would be adjusted in light of the proposed change to have a separate sub-category controlling software. This paragraph indicates that software that "converts" an article controlled in category XII to one subject to the EAR is still controlled under the ITAR. This is also vague and unclear. The concept of software that "*converts*" an ITAR item to an EAR item needs to be more clearly distinguished from software that is simply *used* with an ITAR item that has been incorporated into an EAR item. To hazard a guess, it seems this note may have been intended to control software that plays a role in preventing a core with an IRFPA from meeting the gunfire shock spec discussed in (c)(12)(ii), or perhaps software that otherwise downgrades an ITAR-controlled item by limiting other aspects of its performance.

However, as written it, either misses the mark for this or is so broad as to potentially capture every commercial IR camera that uses an IRFPA controlled in (c)(2). Any core that is designed to meet the gunfire shock spec will likely have software *and* hardware (e.g. accelerometer sensors and associated circuitry) involved, so it could easily be argued that the software, *by itself*, does not "convert" what would have been an ITAR-controlled core into an EAR-controlled one. On the other hand, if the software merely needs to play a role in converting the ITAR item to an EAR-controlled item, then every commercial IR camera that uses an IRFPA controlled in (c)(2) will potentially have ITAR-controlled software. (Even if the IRFPA is encapsulated and subject to EAR control, Note 1to paragraph (f) clearly indicates that tech data that directly relates to an ITAR item remains ITAR controlled, even if it could also apply to an EAR item.)

As discussed above, the technical data (and software) used to operate an IRFPA needs to have the same jurisdiction and controls as the IRFPA itself. To be competitive, U.S. IRFPA manufacturers need to be able to provide the information needed to operate the IRFPA. Often, this includes software modules and/or drivers so the IRFPA user does not need to reinvent these. Further, manufacturers of civil/commercial IR cameras cannot efficiently develop and support their products if there is ambiguity whether the camera software (including the portion that operates the IRFPA) is ITAR controlled. For larger companies with globally dispersed

development teams, this creates ambiguity about what controls need to be in place among the various teams. Worse still, it potentially creates a situation where an ITAR license would be required to provide something as simple as a bug-fix software update for a civil/commercial EAR-controlled IR camera.

Part C of note 2 to paragraph (f) is also vague and overly broad. In particular:

1. As discussed above, models and tools to simulate the output of an IRFPA are basic and fundamental to designing an IR camera that uses the IRFPA. It needs to be clear that these are included in the information to operate the IRFPA.

2. Simulation of radiometrically calibrated spectral signatures and volumetric effects of plumes has numerous civil/commercial applications and would be fundamental to developing industrial and environmental gas imaging systems.

Note 3 to paragraph (f) is an additional part of the illogical attempt to draw the EAR/ITAR line for IRFPAs by distinguishing those in a "permanent encapsulated sensor assembly" from those that are not. As discussed above, this is fraught with problems and instead would create a vast gray zone and a need for countless CJs—especially for wafer-level and pixel-level packaging technologies in use with microbolometer IRFPAs.

C. EAR REVISIONS

I. Creation of new ECCNs to control items that are currently EAR99 and rollback of License Exception availability for EAR-controlled items is contrary to ECR goals

The title of the EAR Revisions states that this rule shall remove from the USML those items that the President determines no longer warrant control on the USML. To the contrary, it appears that this revision of the EAR creates new controls on items that were not previously controlled, increases licensing requirements, removes availability of license exceptions and even imposes a presumption of denial for certain items. The proposed revisions are contrary to Export Control Reform, will create an administrative burden on the civil/commercial industry, and will place U.S. companies at a competitive disadvantage.

a. Proposed Revisions to Part 740 and 742 Increase Controls and Restrict Licensing

The imposition of worldwide licensing requirements and removal of STA eligibility for 6A002, 6E001, and 6E002 items undermines the flexibility of EAR controls on commercial thermal imaging devices, and would negatively impact the competitiveness of U.S. industry by burdening its ability to work cooperatively, even internally within corporate affiliates located in the European Union and other Wassenaar Arrangement countries.

The EAR rule creates several new unilaterally controlled ECCNs, or revises unilateral ECCNs to control items that are not currently controlled, such as 0E987, 6A990, 6A994, 6E990, 6D994 and 6E994 and where the U.S. Government has provided no reasoned basis to justify why

proposed worldwide Regional Stability controls are appropriate. If the U.S. Government truly believes that the need for worldwide control of such items and technologies is self-evident, then our multilateral partners must surely agree. If these items are truly highly sensitive, then it would seem to be more appropriate to propose controls for them through the Wassenaar Arrangement. If there are compelling arguments favoring worldwide control, then certainly these efforts would be successful. This makes more sense than imposing unilateral controls, and would place U.S. industry on a more level playing field, at least with respect to foreign competition in Wassenaar Arrangment countries. If our multilateral partners do not agree that controls are appropriate such items should be subject to no greater than EAR99 or AT-level control. Additionally, placing such controls on items, software and technology that are already widely available throughout the world, is illogical and will create an administrative

As with the ITAR proposed changes, key definitions are lacking, such as what criteria make an item a "weapon sight" or establishing clear criteria as to what items are "military" items to be controlled by the 600 series versus those in normal commercial use.

These changes are also inconsistent with the goals of ECR, which include facilitation of cooperation with multilateral regime partners, and not imposing new export controls on items without clear national security justification and a push for multilateral controls.

Practically speaking, these changes will dramatically increase the administrative burden of U.S. industry and BIS. Multinationals that are now employing STA to support foreign subsidiaries in R&D, manufacture and service will now have to apply for licenses that may now be denied based on the proposed presumption of denial in 742. 6(b)(iv).

b. Proposed Revisions to Section 744.9 will Impede Industry's Ability to Compete

Managing sales that are subject to Section 744.9 is already a challenge. The proposed revisions will significantly increase the complexity and burden on the U.S. thermal imaging industry. Many infrared cameras controlled by 6A993 are low-cost, consumer goods that are distributed internationally, often through multiple distributors and sometimes sold in storefronts and on-line. At the time the U.S. company sells these goods to the distributor they typically do not know the end-user or end-use. With the addition of the "is unable to determine whether" language, Fluke is uncertain if we can even continue selling these cameras via the distribution model given this proposed language.

Notwithstanding the new language, adding 6A993 to the list of items subject to 744.9 will be an overwhelming administrative/resource burden to implement proper controls. New processes, forms, training, and audits internally and with all global subs to control for this rule will be required. The increased administrative burden on distributors will hinder sales of these items, especially for 6A993.a cameras, and cause a competitive disadvantage

D. CONCLUSIONS

Overall, we conclude there are fundamental flaws in the proposed rules, which undermine the policy objectives of Export Control Reform, and the objectives of the U.S. export control regime in general.

- The proposed rules impose controls on items that are currently controlled as EAR99 and/or are in normal commercial use, expanding the extent of controls with respect to commercially available thermal imaging devices, software, and technology.

- The proposed rules are unnecessarily complex and do not establish clear lines between USML and EAR controls, lack clear definitions, or differentiate controls based on parameters that do not make sense from an industry or technical perspective. This makes the rules more difficult for companies to understand and administer internally, and does little to simplify U.S. Government enforcement efforts. The proposed changes will likely increase, rather than decrease, the need for industry and enforcement agencies to request CJ and CCATS determinations to determine what controls actually apply to night vision devices. Provisions so complicated that explanatory notes need to be explained by additional explanatory notes almost guarantee misinterpretation.

- Unjustified reductions in License Exception eligibility and the establishment of more unilateral U.S. export controls on night vision items will further reduce the ability of U.S.-based companies to work effectively with affiliates located in Wassenaar Arrangement countries, undercutting the goals of ECR to facilitate interoperability and co-development of products with regime partners. If ECR can facilitate cooperative development of major weapons systems with our allies, such as military aircraft, missiles, and warships, it should also be able to do so with respect to military thermal imaging systems, let alone with respect to EAR-controlled thermal imaging systems. Given the worldwide availability of such technology, there is no apparent justification for treating thermal imaging devices any differently in the context of ECR.

- The overall effect of these controls will likely be to reduce the competitiveness of U.S. industry, sheltering foreign competitors and enabling them to gain a greater share of the commercial and military markets. This may lead to increased costs for the U.S. government, potential loss of U.S. technological edge, and ultimately to greater U.S. government reliance on foreign-sourced thermal imaging commodities. Fastening the export control tethers too tightly, without regard to existing foreign availability and the intertwined relationship between a healthy U.S. commercial thermal imaging industry and a healthy U.S. military industry, may unintentionally transform those tethers into a noose, choking off a key source of important tactical technology for the U.S. government, while simultaneously pushing good U.S. jobs offshore to foreign competition.

Thank you once again for the opportunity to provide comments on this proposed rule. We would be pleased to discuss any of this with DDTC.

Submitted on Behalf of Fluke Corporation by,

Matthew Schmidt, Director, Business & Technology Development

Jennifer Christy, Senior Manager, Trade Compliance

Slone Pearson, International Trade Compliance Counsel

Fluke Corp Public Comment RIN 0694-AF75 & RIN 1400-AD32 - Footnotes with Hyperlinks

1 – Wafer level packaging (WLP) technology

Early (1993) Honeywell patent on wafer level packaging for IRFPAs provides good overview of the concept. Of note, this is referenced by 110+ other patents, including numerous from outside the US; a good understanding of WLP can be obtained by following these 110+ links.

https://www.google.com/patents/US5895233?dq=US5895233&hl=en&sa=X&ei=VyeTVb3VHJHaoASVkZnAAQ&ved=0CB0Q6AEwAA

2 – LETI/ULIS pixel level packaging

http://proceedings.spiedigitallibrary.org/proceeding.aspx?articleid=1387339&resultClick=1

3 – Small sample of IRFPAs available from outside the US

China (GWIC, etc) – Excerpts: ***Currently more than five Chinese companies*** and institutions design and fabricate uncooled infrared focal plane array. Some devices have sensitivity as high as 30 mK; the largest array ***for commercial products*** is 640×512 and the smallest pixel size is 17 µm…

Uncooled infrared focal plane array imaging in China

China – (DALI) Excerpt: Since 2006, Dali…has brought several uncooled detectors into mass production, including 35um 384x288, 25um 160x120, 384x288, 640x480, and 17um 384x288, 640x480.

Uncooled infrared detector and imager development at DALI Technology

Turkey (Mikrosens) –

A miniature low-cost LWIR camera with a 160×120 microbolometer FPA

Israel (SCD) – Very wide range of IRFPAs commercially available, SWIR, MWIR and LWIR, **up to 1024x768**. (Note, website is for "SCD-USA LLC" but this is just a US sales/support office, these IRFPAs are all developed and manufactured in Israel).

http://www.scdusa-ir.com/ir-sensors/

France (ULIS) – In volume production with a wide range of a-Si uncooled microbolometer IRFPAs, **up to 1024x768**…

http://www.ulis-ir.com/index.php?infrared-detector=products

France (Sofradir) – Very wide range of photon-detector IRFPAs for MWIR and LWIR – MCT, InSb, InGaAs and QWIP.

http://www.sofradir.com/

Belgium (Xenics) -- 640 x 512 InGaAs (SWIR) detector with 20 µm pixel pitch.

http://www.xenics.com/en/xfpa-17-640-ln2

http://www.xenics.com/en/xlin-detector-series

http://www.xenics.com/en/xlin-17-3000

Germany (Bosch) – Low-cost 82x62 uncooled thermo-diode IRFPA

http://www.bosch-semiconductors.de/media/pdf_1/press_releases/SMO130_Productinfo_1402.pdf

Canada (INO)

http://www.ino.ca/media/187149/datsheet-384x288-fpa.pdf

South Korea (I3 System) – Locally developed cooled MWIR/LWIR and uncooled LWIR.

http://www.i3system.com/eng/n_product/product111.html

http://www.i3system.com/eng/n_product/product121.html

4 – Fluke TiX1000 (1024x768 civil/commercial camera)

http://en-us.fluke.com/products/infrared-cameras/tix1000-infrared-camera.html

5 – Some examples of rugged civil/commercial cameras that meet 2M drop, etc.

http://en-us.fluke.com/products/infrared-cameras/fluke-ti125-infrared-camera-30-hz.html

http://en-us.fluke.com/products/infrared-cameras/fluke-ti400-infrared-camera.html

http://www.flir.com/fire/content/?id=69019

http://www.bullard.com/V3/products/thermal_imaging/fire_service/

http://www.isgfire.co.uk/

https://www.scottsafety.com/en/us/Pages/ProductDetail.aspx?productdetail=Eagle+Attack+Thermal+Imaging+Camera

6 – See US US20130286215

https://www.google.com/patents/US20130286215?dq=infrared+thermal+imager+with+accelerometer&cl=en

7 – Some examples of Civil/Commercial IR cameras with near-to-eye display

http://en-us.fluke.com/products/infrared-cameras/tix1000-infrared-camera.html

http://www.flir.com/science/display/?id=46792

http://www.flir.com/ogi/display/?id=55671

8 – Uncooled IRFPAs with more than 328,000 pixels

See, for example, above references for ULIS and SCD

9 – ROIC literature and small sample of ROICs available OUS

For example, a quick search of SPIE's digital library with the terms "infrared" and "ROIC" yields 456 hits…

http://proceedings.spiedigitallibrary.org/solr/searchresults.aspx#q=infrared%20ROIC&SearchSourceType=1

A few specific examples

Turkey –

A 1280×1024-15µm CTIA ROIC for SWIR FPAs

A 640×480-17µm ROIC for uncooled microbolometer FPAs

MT3825BA: a 384×288-25µm ROIC for uncooled microbolometer FPAs

MT3250BA: a 320×256-50µm snapshot microbolometer ROIC for high-resistance detector arrays

MT6415CA: a 640×512-15µm CTIA ROIC for SWIR InGaAs detector arrays

MT6425CA: a 640 x 512-25µm CTIA ROIC for SWIR InGaAs detector arrays

10 – Some examples of civil/commercial systems with multi-sensor fusion that may go beyond mere "blending"

http://en-us.fluke.com/products/infrared-cameras/fluke-ir-fusion-technology.html

http://www.flir.com/instruments/display/?id=61194#videobox

PUBLIC SUBMISSION

As of: 6/25/15 1:51 PM
Received: May 12, 2015
Status: Pending_Post
Tracking No. 1jz-8it7-mc0p
Comments Due: July 06, 2015
Submission Type: Web

Docket: BIS-2015-0016
Revisions to the Export Administration Regulations (EAR): Control of Fire Control, Range Finder, Optical, and Guidance and Control Equipment the President Determines No Longer Warrant Control Under the United States Munitions List (USML)

Comment On: BIS-2015-0016-0001
Export Administration Regulations: Control of Fire Control, Range Finder, Optical, and Guidance and Control Equipment that No Longer Warrant Control under the U.S. Munitions List

Document: BIS-2015-0016-DRAFT-0001
Comment on FR Doc # 2015-10353

Submitter Information

Name: William Forrest
Address:
Dept. Physics and Astronomy
University of Rochester
Rochester, NY, 14627
Email: forrest@pas.rochester.edu
Phone: 585 275 4343

General Comment

See attached file(s)

Attachments

ITAR

The current state of ITAR regulations is detrimental to the progress of Astronomy, which is my profession. We work with Aerospace companies, such as Teledyne and Raytheon, to develop infrared sensitive detector arrays (IRFPA's) for Space Astronomy. Our research is funded by NASA. The arrays are produced by the Aerospace company in consultation with the astronomers at the Univ. of Rochester. Certainly, similar devices are used by the Armed Forces, but the devices we are developing are not appropriate for Strategic applications. The infrared background in a well designed space observatory is approximately one million times lower than found in strategic applications. This dictates quite different construction techniques, to achieve the very low dark currents required for space. Furthermore, the power dissipation requirements for a space observatory are very low, circa 1 mW per megapixel. Finally, we employ long integration times, of order seconds, between readouts, which renders the devices not useful in Strategic applications.

Thus our technology development is only peripherally related to arms development. At the same time, the ITAR regulations are very onerous to my institution, the Univ. of Rochester. On many research projects in the recent past, we have had considerable difficulty getting our administration to approve of our research because of these ITAR implications. At the same time, Aerospace companies in Europe are developing similar technology, and they advertise their products as 'ITAR free'. This puts our US manufacturers at a distinct disadvantage. We are at risk of losing the competitive advantage our companies have in this field currently.

Therefore I request that the ITAR regulations covering infrared arrays for space astronomy be loosened or removed, consistent with the real lack of threat this technology poses to US interests, and pursuant to promoting the Aerospace companies working in this area and the progress of Astronomy.

FRASER OPTICS®
The Clear Advantage

Subject: Fraser Optics Response to Category XII Proposed Changes

1. Switching from Figure of Merit (FOM) to “luminous sensitivity” as *the* discriminating factor is seen as an arbitrary and confusing value versus the current method (signal-to-noise ratio x resolution).What is the comparison of luminous sensitivity to established FOM levels so we can assess the impacts. Fraser is intimately involved with providing IITs thru export licensing and this change could rewrite all the licensing precedents established up to now for years of exporting internationally.
    a. Why the change at all. IITs are 30 year old technology and are available all over the world. This will make it harder to sell our systems outfitted with IITs internationally by changing from FOM to this unknown value and give openings to cut into our sales with tubes more easily available with less hassles and controls. We open the door for European companies and others like Photonis, 4 Russian manufacturers and a German company. We already see sales internationally turning from US manufactured IITs to European due to export controls and fluidity of approvals by the US.
    b. Microamps per lumen
        i. How does this transfer to FOM levels as currently used
        ii. Why the change?
        iii. What is the purpose - harden the controls on old technology
    c. Is auto-gating a part of the licensing process still, or are there levels of auto-gating?

2. Why should 9 Hz Thermal imaging cameras already cleared for commercial use by Commodity Jurisdictions be subject to export-control regardless of their integration into foreign equipment? This is counter-productive to the stated goal of US products being included in foreign design and ultimately detrimental to U.S exports.
    a. 9 Hz thermal imaging cameras are available globally and can replace US manufactured devices tied up in added controls and licensing not there previously. Any effect on acquisition by foreign countries will be minimal at best and ensure that U.S companies are written out of foreign military designs
        i. EU Annex I List of Dual Use Items and Technology (6A003.b.4.b)
    b. At our company, one that employs less than 35 people, this could seriously hamper our ability to close millions of dollars worth of sales with this attempt to keep 20 year old technology out of the hands of the wrong people but instead negatively impact the sales and growth of US companies thru export and Commodity Jurisdiction sales currently underway or in business plans for 2016 and out.
3. What capabilities of a thermal sensor array are changed when it is taken out of its “encapsulated sensor assembly?” Whether it is a permanent assembly or not has no affect on the capabilities of the imager.
4. What does the category encapsulated sensor Assembly for a thermal imager mean, what is the purpose of this description???
    a. Applying software to change the capabilities is completely different and already covered.
    b. The logic of this proposal is: (non-ITAR product)+(non-ITAR product) = ITAR product
    c. This is exactly the kind of change that will stifle exports while offering nothing in the way of protecting US technologies, forces, or security interests.
5. If a product is already designated non-ITAR, then why is it assumed:
    a. That restricting its sale is making any measurable impact on foreign forces ability to acquire it?
    b. That restricting its sale is good for the US and for US companies
    c. How are US companies expected to operate in this severely limited environment???

FRASER OPTICS®
The Clear Advantage

d. That other countries aren't taking advantage of this and pushing their technology and products into areas where US companies dominate?
e. That we aren't *already* being excluded from foreign innovation, design, and exports*?*
f. That we won't miss out on incorporating new technologies to improve our own?
g. That billions of dollars won't be lost in exports every year?
h. That this won't cost thousands of jobs?

Robert F Joyce Jr
President
Fraser Optics Defense
Warminster Pa
1.215.443.5240 x102

July 6, 2015

Regulatory Policy Division
Bureau of Industry and Security
US Department of Commerce
Room 2099B
14th Street and Pennsylvania Avenue NW
Washington, DC 20230

And

Office of Defense Trade Controls Policy
Directorate of Defense Trade Controls
Bureau of Political Military Affairs
Department of State
Washington, DC 20522

Sent via email to: publiccomments@bis.doc.gov and DDTCPublicComments@state.gov

Re: RIN 0694-AF75 - Revisions to the Export Administration Regulations (EAR): Control of Fire Control, Range Finder, Optical, and Guidance and Control Equipment the President Determines No Longer Warrant Control Under the United States Munitions List (USML) and RIN 1400-AD32 Amendment to the International Traffic in Arms Regulations: Revision of U.S. Munitions List Category XII

Dear Sir/Madam:

Google is pleased for the opportunity to provide comments to the US Department of Commerce and the Department of State on the Export Administration Regulations (EAR) proposed rule (Department of Commerce Bureau of Industry and Security, 80 Fed. Reg. 25798 (proposed, May 5, 2015), hereinafter "Commerce Rule") and the Department of State rule (Department of State, 80 Fed. Reg. 25821 (proposed, May 5, 2015), hereinafter "State Rule"). We understand that the proposed rules in question are in furtherance of the agencies' ongoing export control reform objectives. While we appreciate the difficult undertaking that accompanies this effort, we believe the proposed rules add to the existing regulatory complexity, both from a logistical and technical perspective, rather than reduce it. As demonstrated below in our specific comments, the several proposed additions to Category XII of the United States Munitions List (22 C.F.R. Part 121, "USML") are unnecessarily overbroad and render the line between State and Commerce jurisdiction much less bright than what is accomplished under the current regulations. Furthermore, the proposed changes introduce concepts that are confusing from a technical standpoint, making the rules hard to apply in practice. Finally, under these proposed changes, a large number of commercially globally available items controlled under the EAR (15 C.F.R. Part 730 *et. seq.*) will either fall under State jurisdiction or will be subject to the same International Traffic in Arms (22 C.F.R. Part 120 *et. seq.*, "ITAR") licensing policy (i.e., a license will be required for exports and deemed exports worldwide) despite remaining under EAR control. This will serve to hurt US industry while benefiting non-US competitors. Given

the current technology landscape in the affected sectors, imposing a wall around this technology will give the false illusion of protecting it, when, in reality, this technology is already available and being developed outside the US. Sealing it off in the US will force non-US companies to design out/around US components, thereby harming business for US companies in areas where the technology is already readily available from non-US suppliers. It will also likely discourage US companies from developing technology in the United States. We have provided several recommendations below in an attempt to address these issues, but ultimately, our underlying recommendation would be to re-draft the rules from scratch; tweaking them to address the problematic aspects may actually further complicate the rules and will continue the confusing layers of cross-referencing and wording inter-dependency that characterizes the proposed rules, as currently worded.

Comments to State Rule

Provision: Cat. XII(b)(6): Light detection and ranging (LIDAR), laser detection and ranging (LADAR), or range-gated systems or equipment, incorporating or specially designed to incorporate an article controlled in this subchapter (MT if designed or modified for rockets, missiles, SLVs, drones, or unmanned aerial vehicle systems capable of delivering at least a 500 kg payload to a range of at least 300 km);

Note to paragraph (b)(6): This paragraph does not control LIDAR systems or equipment for civil automotive applications having a range limited to 200 m or less.

- **Comment**: This proposed provision would capture LIDAR systems used in self-driving car applications even if the system is solely designed for civil automotive applications. This is because it would not qualify for the "Note to paragraph (b)(6)" (hereinafter, referred to as "Civil Automotive Exception"). Specifically, the system would not meet the criteria of the Civil Automotive Exception if the range of the LIDAR system exceeds the range of 200m. It is our belief that many commercial companies are developing self-driving car LIDAR technology that would exceed 200m. In particular, we believe that the range must exceed 200m for safety reasons. For example, the system's range needs to be greater than 200m when the vehicle is making unprotected left turns in the presence of cars that are driving at higher speeds regardless of whether they decelerate or not. A greater than 200m range is also necessary for spotting oncoming emergency vehicles so that the self-driving car can safely pull over and move out of the path of such vehicles. Furthermore, in rural areas where speed limits tend to be higher, being able to detect oncoming traffic at a greater range than 200m is again important from a safety perspective.

- **Recommendation**: We request that the range in the Civil Automotive Exception be increased to 400m to account for current technology developments as well as future innovation in this space, both of which will serve to increase overall self-driving car safety.

Provision: Cat. XII(b)(8): LIDAR, LADAR, or other laser range-gated systems or equipment, as follows (MT if designed or modified for rockets, missiles, SLVs, drones, or unmanned

aerial vehicle systems capable of delivering at least a 500 kg payload to a range of at least 300 km):

(iii) Systems or equipment having an electrical bandwidth of 100 MHz or greater, and incorporating or specially designed to incorporate either a Geigermode detector array having at least 32 elements or a linear-mode detector array having at least 128 elements.

- **Comment**: This proposed provision potentially captures LIDAR systems used in civil automotive applications. Specifically, "incoming" bandwidth refers to detector bandwidth and determines minimum resolvable pulse length, which, in turn, drives minimum detectable feature separation. For a self-driving car, a sufficiently short light pulse and the ability to resolve this pulse allows the car to effectively distinguish between objects that are positioned on the same vector with respect to the car, and that are spatially close, such as a pedestrian standing near a car. Detector bandwidth determines the minimum width (in the time domain) of a resolvable pulse, which corresponds to the physical length of a collection of photons in the spatial domain. A long light pulse of 10ns (which would equate to 100MHz) is 3m long and could reflect off a pedestrian and also a vehicle 1m away from the pedestrian; a light pulse of 1ns (which would equate to 1000MHz) is 30cm long and would have separate reflections off the pedestrian and vehicle generating much more of an accurate read-out of obstacles in the vicinity. In short, having a bandwidth of 1000MHz allows the system to distinguish between objects/people that are spatially close and on the same vector and to react accordingly to achieve road safety goals. A clock bandwidth of 100 MHz is lower than many common operating bandwidths; the clock in a processor that would control even a trivial LIDAR system could be expected to run faster than 100 MHz. Furthermore, a detector bandwidth of 100 MHz is lower than a common detector and amplifier could be expected to have (and much slower than many currently available components). If the proposed control is intended to address "incoming" or detector bandwidth, it would likely capture many standard commercially available LIDAR systems that are intended and designed for civil automotive self-driving car applications.

  In addition to the bandwidth considerations noted above, we also put forth that the trigger point of 128 elements is too restrictive from a safety perspective for civilian self-driving car applications. Specifically, such cars need a LIDAR system to detect with accuracy foreign objects and debris ("FOD") on the road. The typical range of angle of slope on a road is +/-8 deg. The car needs to be a certain distance away from the FOD in order to react to it safely (150m), and a typical dangerous FOD is 15cm tall. This means that the sensor requires on the order of 250 detectors to cover the complete field of view with enough resolution to maintain safety. It should be noted that collision avoidance technology, including LIDAR systems, have been recognized as playing a key role in preventing rear-end crashes[1].

---

[1] *See* http://www.ntsb.gov/safety/safety-studies/Documents/SIR1501.pdf, and http://c.ymcdn.com/sites/www.mapps.org/resource/resmgr/Federal_Issues_LIDAR/LIDAR_Systems_and_Safety_for.pdf

Driver-assistance cars do not need this same level of FOD detection mainly because a driver would be able to step in and react whereas in a self-driving car, the system itself needs to react. As such, this parameter, as currently worded, would actually discourage safety for civilian self-driving cars.

Foreign availability: we note that many foreign manufacturers have developed technology in this space. Specifically, Reigl, an Austrian company, Sick AG, a German company and Hokuyo LTD, a Japanese company have all developed LIDAR systems that operate at over 100MHz.

- **Recommendation**: We request that the same Civil Automotive Exception (with the amendment of extending the range to 400m) that appears in the Note to paragraph (b)(6) be included in (b)(8) to avoid capturing commercial LIDAR systems that are designed and intended for use in civil automotive applications.

  If the intention is to capture "incoming" or detector bandwidth, we recommend that the limit be increased to 1000MHz which would cover a standard LIDAR system designed for civil automotive applications. We also recommend that the element trigger be "greater than 256 elements." Both of these changes would serve to encourage companies working in this space to continue to work on critical safety features.

Provision: Cat. XII(c)(2) Photon detector, microbolometer detector, or multispectral detector infrared focal plane arrays (IRFPAs) having a peak response within the wavelength range exceeding 900 nm but not exceeding 30,000 nm and not integrated into a permanent encapsulated sensor assembly, and detector elements therefor;

- **Comment**: Due to the extremely wide range of wavelength parameter, this sweeping control would potentially capture IRFPAs that are intended by design and function for use in commercial LIDAR systems used in self-driving cars. Such IRFPAs, including highly sophisticated arrays, are currently under the jurisdiction of the Commerce Department so this proposed control would have the effect of placing commercially world-wide available EAR-controlled IRFPAs under ITAR jurisdiction. This would not only have devastating effects on US businesses, but it will also serve to bolster foreign competitors' efforts in this space. Indeed, many companies may elect to move operations abroad and source commercially available non-US components to avoid the hugely negative impact of these controls.

  With respect to the term "focal plane array" itself, it is unclear whether detector elements that are purchased separately on multiple chips but are ultimately put together on a plane would actually qualify as a "focal plane array."

  Additionally, linear arrays (single line of detectors) can only form images when coupled to a scanning system, which makes them very inefficient as night vision applications, but are necessary to form the 360 degrees field of view that self-driving vehicles require.

Foreign availability: Many non-US companies have IRFPAs that would be caught by this control. For example, Hamamatsu, a Japanese company, has an array in the range of 900-1600nm that would be caught under the proposed control.

- **Recommendation:** Include an exception/carve out for IRFPAs that are specially designed and intended for use in LIDAR systems used in civil automotive applications and having a peak response within the wavelength range not exceeding 1800 nm. Also, we recommend amending the definition of an IRFPA to include the monolithic nature of it (and exclude arrays formed of multiple dies assembled together in a system) as well as exclude linear arrays.

Provision: Note 1 to paragraph (c): A permanent encapsulated sensor assembly (e.g., sealed enclosure, vacuum package) prevents direct access to the IRFPA, disassembly of the sensor assembly, and removal of the IRFPA without destruction or damage to the IRFPA.

- **Comment:** To our knowledge, the term "permanent encapsulated sensor assembly" is not an industry-wide used term. As such, this will inevitably lead to confusion as well as inconsistency in how it is applied when interpreting the related controls. Even with the definition provided in Note 1 to paragraph(c) as well as in sec. 772.1 of the EAR (commented on below), it is hard to apply since the requirements of the definition in their strictest sense cannot be met. Specifically, as far as we are aware, many focal plane arrays that are in some sort of encapsulation can still be disassembled without damaging or destroying the IRFPA. However, this can generally only be done by specialized tools by someone who has detailed awareness of the design of the IRFPA. Is the term "permanent encapsulated sensor assembly" intended to capture closed and non-serviceable encapsulated systems that could be disassembled by a specialized technician using specialized tools without damaging or destroying the IRFPA **or** is it only intended to capture closed and non-serviceable encapsulated systems that cannot be disassembled without damaging or destroying the IRFPA? If the latter, it is unclear to us whether any assembly would actually meet that criteria.

- **Recommendation**: If the technical data is already controlled and one would need the design technology in order to be able to disassemble the assembly without damaging or destroying the IRFPA, it makes sense to modify this note as well as the definition set forth in sec. 772.1 of the EAR to read as follows: "*A permanent encapsulated sensor assembly (e.g., sealed enclosure, vacuum package) is designed as a closed and non-serviceable system intended to prevent direct access to the IRFPA, disassembly of the sensor assembly, and removal of the IRFPA.*"

Provision: Note 1 to paragraph (f): Technical data and defense services directly related to image intensifier tubes and specially designed parts and components therefor controlled in paragraph (c)(1) of this category, infrared focal plane arrays (IRFPAs) and detector elements therefor controlled in paragraph (c)(2) of this category, integrated IRFPA dewar cooler assemblies (IDCAs) controlled in paragraph (c)(9) of this category, wafers incorporating IRFPA or ROIC structures controlled in paragraph (e)(3) of this category, and specially designed readout integrated circuits (ROICs) controlled in paragraphs (e)(4) and (5) of this

category, remain subject to the ITAR even if the technical data or defense services could also apply to items subject to the EAR.

- **Comment**: Note 1 to paragraph (f) has the potential to yield unreasonable consequences. For example, if Manufacturer A is designing a focal plane array controlled under the EAR, the related design technology would be controlled under the EAR. If Manufacturer B takes that same technology though and designs an ITAR-controlled focal plane array, that design technology that was controlled under the EAR would now become controlled under the ITAR even though it may have nothing to do with the parameters triggering control of the focal plane array under the ITAR.

- **Recommendation**: This Note should be revised to make clear that technical data that is "directly related" to an ITAR-controlled item (covered by the mentioned controls in the Note) is limited to technology that is specific to the parameters that render the device controlled under the ITAR and would not include generic design technology for focal plane arrays that would be covered under the EAR.

<u>Comments to Commerce Rule</u>

Provision*: *§ 772.1 Definitions of terms as used in the Export Administration Regulations (EAR). Permanent encapsulated sensor assembly. (Cat 6) A permanent encapsulated sensor assembly (e.g. sealed enclosure, vacuum package) containing an infra-red focal plane array (IRFPA) that prevents direct access to the IRFPA, disassembly of the sensor assembly, and removal of the IRFPA without destruction or damage to the IRFPA.

- **Comment**: To our knowledge, the term "permanent encapsulated sensor assembly" is not an industry-wide used term. As such, this will inevitably lead to confusion as well as inconsistency in how it is applied when interpreting the related controls. Even with the definition provided in Note 1 to paragraph(c) as well as in sec. 772.1 of the EAR (commented on below), it is hard to apply since the requirements of the definition in their strictest sense cannot be met. Specifically, as far as we are aware, many focal plane arrays that are in some sort of encapsulation can still be disassembled without damaging or destroying the IRFPA. However, this can generally only be done by specialized tools by someone who has detailed awareness of the design of the IRFPA. Is the term "permanent encapsulated sensor assembly" intended to capture closed and non-serviceable encapsulated systems that could be disassembled by a specialized technician using specialized tools without damaging or destroying the IRFPA **or** is it only intended to capture closed and non-serviceable encapsulated systems that cannot be disassembled without damaging or destroying the IRFPA? If the latter, it is unclear to us whether any assembly would actually meet that criteria.

- **Recommendation**: If the technical data is already controlled and one would need the design technology in order to be able to disassemble the assembly without damaging or destroying the IRFPA, it makes sense to modify this note as well as the definition set forth in sec. 772.1 of the EAR to read as follows: "*A permanent encapsulated sensor*

assembly (e.g., sealed enclosure, vacuum package) is designed as a closed and non-serviceable system intended to prevent direct access to the IRFPA, disassembly of the sensor assembly, and removal of the IRFPA."

Provision: § 742.6 Regional stability. (a) * * * (8) Special worldwide RS license requirement for specified items controlled in Category 0 or 6. A license is required to export or reexport the following items to all destinations, including Canada: (i) ''Technology'' controlled under ECCN 0E987; (ii) All commodities controlled under ECCNs 6A002; (iii) All commodities controlled under ECCN 6A990; (iv) ''Software'' controlled under ECCN 6D002 for the ''use'' of commodities controlled under 6A002.b; (v) ''Software'' controlled under ECCN 6D003.c; (vi) ''Software'' controlled under ECCN 6D991 for the ''development,'' ''production,'' or ''use'' of commodities controlled under ECCNs 6A002, 6A003, or 6A990; (vii) ''Software'' controlled under ECCN 6D994; (viii) ''Technology'' controlled under ECCN 6E001 for the ''development'' of commodities controlled under 6A002 or 6A003; (ix) ''Technology'' controlled under ECCN 6E002 for the ''production'' of commodities controlled under 6A002 or 6A003; (x) ''Technology'' controlled under 6E990; and (xi) ''Technology'' controlled under ECCN 6E994.

- **Comment**: This proposed regional stability reason for control imposes a worldwide licensing requirement for items classified under several ECCNs. Not only is this type of global control unprecedented under the EAR, but, in addition, it is being imposed on several items that were previously classified as EAR99 (e.g., those items covered under newly created ECCNs 6D994 and 6E994 as well as the additional items that will now be caught under the proposed re-wording of ECCN 6A990 which would expand its scope to include ROICs for *all focal plane arrays* controlled under 6A002a.3). In short, this means that items that previously required no license at all (except for export to the embargoed countries) will now require an export license to be shipped everywhere including Canada. Needless to say, this will result in a huge burden on industry as well as the Commerce Department, which will have to process both additional export/reexport and deemed export/deemed reexport license applications for the covered items. Since projects involving this type of technology and source code have not been thus far subject to restrictive export controls, it is highly likely that non-US nationals have already been working on them and continue to work on them today. It is also fairly common for collaboration on projects to occur across offices and across countries. The proposed control would require limiting cross-country collaboration, restricting those who can work on the projects to US nationals and/or obtaining licenses for all non-US nationals working on the project. Applying for export and deemed export licenses would impose a large burden on both the Commerce Department and industry, as described earlier, and raises other issues caused by a shift in licensing policy, described further below. It will

also inevitably affect the marketability of US parts and components as well as software and technology.

Provision: (b) Licensing policy.—(1) Licensing policy for RS Column 1 items or items subject to worldwide RS control…(iv) Applications for exports or reexports of software or technology described in paragraphs (a)(8)(i), (a)(8)(iv), (a)(8)(v), (a)(8)(vi), (a)(8)(viii), and (a)(8)(x) will be reviewed with a presumption of denial. There is also a presumption of denial for technology described in paragraph (a)(8)(ix), unless it is ''build-to-print technology'' that is required for integration, mounting, inspection, testing, or quality assurance (e.g., necessary to meet International Standards Organization (ISO) certification), which will be reviewed on a case-by-case basis.

- **Comment**: Under the proposed licensing policy for items subject to the RS worldwide control, many items that are currently EAR99 (items controlled under the proposed rewording of 6A990) in addition to numerous other items controlled under 6A002, 6D003.c, and 6E001 that were eligible for various license exceptions would now be subject to a licensing policy of denial. This shift in licensing policy, creation of a worldwide licensing requirement, and removal of eligibility of certain license exceptions serve to pseudo-treat these items as ITAR-controlled even though these items are actually currently controlled under the EAR. This would serve to potentially severely impact US industry as companies seek alternative options that would not be tainted by US export licensing policies in this space. Similar long-lasting repercussions were seen in the space and satellite industry when those areas were subjected to ITAR controls and foreign companies then looked to suppliers outside the US (with some foreign companies specifically desiring to go "ITAR free") to avoid subjecting their products and technologies to control under the ITAR. In our view, this would not fall within the spirit of export control reform.

Provision: 6D991 ''Software,'' n.e.s., ''specially designed'' for the ''development'', ''production'', or ''use'' of commodities controlled by 6A002, 6A003, 6A990, 6A991, 6A996, 6A997, or 6A998.

- **Comment**: The proposed revision to 6D991 results in controlling software that is currently controlled as EAR99 (e.g., software "specially designed" for the "development," "production," or "use" of all 6A002 and 6A003 items). Furthermore, the reason for control of RS would result in a license being required for all covered software to all countries and non-US nationalities in the case of deemed exports. Again, controlling this type of software would be disruptive to industry since much of this software is currently non-controlled. Moving from a state of non-control to a state of highly-controlled will inevitably result in large impact from a licensing perspective as

well as from a cross-nationality and cross-country collaboration perspective. Finally, such a control will help further non-US business interests working in this space whose software and technology are not subject to unilateral US export controls.

Provision: 6D994 ''Software'', n.e.s., ''specially designed'' for the maintenance, repair, or overhaul of commodities controlled by 6A002, 6A003, or 6A990.

Provision: 6E994 ''Technology'' ''required'' for the maintenance, repair, or overhaul of commodities controlled under 6A002, 6A003, or 6A990.

- **Comment**: The proposed creation of ECCNs 6D994 and 6E994 would result in controlling low-level software and technology that is currently non-controlled (i.e., EAR99) and already developed abroad by various non-US focal plane array manufacturers. Furthermore, the reason for control of RS would result in a license being required for all covered software and technology to all countries and non-US nationalities (in the case of deemed exports). Thus, we would move from a regulatory environment of not requiring any export or deemed export licenses (except for the embargoed countries) to one where licenses would be required for all covered items regardless of destination or nationality. Again, we believe this would create a significant burden on both US companies and BIS. Further, it would serve to ultimately hurt US businesses by having the secondary effect of encouraging the use of non-US manufacturers and developers so as to avoid the draconian implications that would result from using items that are subject to ITAR-like licensing requirements and policies.

Please do not hesitate to contact us via email (lianasebastian@google.com) or phone (650-214-3036) with any questions or comments regarding this submission.

Sincerely,

Liana Sebastian
Export Compliance Counsel, Google Inc.

Government of Canada
Embassy of Canada

Gouvernement du Canada
Ambassade du Canada

July 6, 2015

501 Pennsylvania Avenue, N.W.
Washington, D.C. 20001

Directorate of Defense Trade Controls (DDTC)
Bureau of Political Military Affairs
SA-1, 12th Floor
U.S. Department of State
Washington, D.C. 20522-0112
DDTCPublicComments@state.gov

Regulatory Policy Division
Bureau of Industry and Security
U.S. Department of Commerce, Room 2099B
14th Street and Pennsylvania Avenue NW
Washington, DC 20230
publiccomments@bis.doc.gov

Comments on "Amendments to the International Traffic in Arms Regulations: Revision of U.S. Munitions List Category XII"

Comments on "Revisions to the Export Administration Regulations (EAR): Control of Fire Control, Range Finder, Optical, and Guidance and Control Equipment the President Determines No Longer Warrant Control under the United States Munitions List (USML)"

Please find attached the Government of Canada's comments on the subject proposed rules.

Canada supports the U.S. Administration's overall goal of strengthening national security by undertaking reforms that will significantly reduce the regulatory burden and costs associated with no- to low-risk transactions of controlled goods. However, Canada is concerned that the proposed imposition of a new licencing requirement would not achieve this objective by causing unnecessary complications to the highly integrated defence industrial base we share. Accordingly, Canada respectfully requests that the proposed rules be revised to ensure that under their final form, no item will require an export licence to Canada where none is presently required.

During the regulatory review process, Canadian and U.S. officials have maintained a much- appreciated dialogue regarding the proposed changes. We remain available for further cooperation to find mutually beneficial solutions.

Sincerely,

Gilles Gauthier
Minister (Economic)

Canada

July 6, 2015

Comments on Amendments to the International Traffic in Arms Regulations: Revision of U.S. Munitions List Category XII

Comments on Revisions to the Export Administration Regulations (EAR): Control of Fire Control, Range Finder, Optical, and Guidance and Control Equipment the President Determines No Longer Warrant Control under the United States Munitions List (USML)

The Government of Canada welcomes the opportunity to provide comments on the proposed changes to the *International Traffic in Arms Regulations: U.S. Munitions List Category XII - Fire Control, Range Finder, Optical, and Guidance and Control Equipment;* and the *Revisions to the Export Administration Regulations (EAR) Commerce Control List Category 6 – Sensors and Lasers.*

Canada and the U.S. share the responsibility of continental defence and we both benefit from an integrated industrial base. As such, Canada is encouraged by President Obama's comprehensive inter-agency review of the U.S. export control system, also known as Export Control Reform (ECR). However, Canada wishes to express its concern that, under the proposed regulatory changes, a significant number of products currently listed under the *U.S. Department of Commerce's Commerce Control List Category 6* (Sensors and Lasers) may require an export licence to Canada, where none is currently required.

For example, under the proposed rule, commercial items related to infrared detection, and their associated software and technology, which currently may be exported to Canada without an individual license, would be subject to new license requirements. These items include optical detectors, image intensifier tubes, focal plane arrays and read-out integrated circuits that are used in cameras and other equipment. These items have extensive and growing uses in commercial applications, such as industrial process control, gas detection, mapping, home inspection, spectroscopy, semiconductor, search and rescue, maritime, security surveillance, firefighting, medical imaging, laboratory, astronomy and automotive applications.

As such, Canada respectfully requests that in further reviewing the proposed changes, due consideration be given to the following factors: the existing cooperation between our countries on issues relating to exports controls at multilateral, regional and bilateral levels; the longstanding Canada-U.S. defence relationship; the highly integrated Canada-U.S. defence industrial base and trade relationship; the reciprocity of favourable export regulations between trusted partners; and the goals of the Export Control Reform to strengthen national security by undertaking reforms that will significantly reduce the regulatory burden and costs associated with no- to low-risk transactions of controlled goods.

1. The proposed regulatory changes should take into account the longstanding Canada-U.S. defence relationship

Canada and the United States are each other's most important security and defence partners. Defence relations between our two countries are longstanding, well entrenched and highly successful. Since World War II, the two countries have successfully shared defence resources to secure supply and defend North America. There are more than 600 Memoranda of Understanding (MOUs) and agreements between the two nations supporting joint cooperation mechanisms, development of defence technology and the interoperability of our fighting forces.

Our militaries need to continue to work together to meet our respective defence and security needs and that of our allies and foreign partners. As such, requiring a new export licence for certain products to Canada challenges existing policies in defence cooperation.

Canada respectfully requests that proposed regulatory changes reflect the historical and political relationship between Canada and the U.S. in the exchange of defence goods.

2. The proposed regulatory changes should not negatively impact the highly integrated Canada-U.S industrial base

Over the past four years, the United States exported over USD $1.1 billion in military equipment, binoculars, and laser equipment to Canada which includes products under *USML Category XII* classification of *Fire Control, Range Finder, Optical, and Guidance and Control Equipment* defence products.

Our longstanding defence relationship has helped develop and sustain a deeply integrated defence industrial base that is celebrated on both sides of the border. Just recently, the House Armed Services Committee highlighted the importance of the North American Defence Industrial Base in its report accompanying the *National Defence Authorization Act*, noting that:

> The committee acknowledges the vital role played by the defense industrial base in supporting the Armed Forces of the United States, noting that a cost-effective, healthy base that is responsive to U.S. military requirements is essential to achieving U.S. national security objectives. The committee further notes that in light of robust trade relations, a shared interest in the defense of North America, and responsibilities as the only North American allies within the North Atlantic Treaty Organization, both the United States and Canada benefit from the North American Defense Industrial Base relationship. Therefore, the committee is supportive of the strong, integrated, and widely dispersed industrial base in North America reflecting the economical use of research, development, and production resources, as laid out in the Department of Defense Instruction 2035.01 dated February 27, 2006.

The Canadian defence and security industrial base consists of over 2,000 firms, many of which have parent companies or subsidiaries in the United States. Every day, U.S. and Canadian firms work in collaboration to service defence contracts in both countries and abroad. In fact, every year, the Canadian Commercial Corporation manages, on average, $1 billion in contracts for goods and services delivered by Canadian companies to the DOC and NASA. Companies on both sides of the border established product lines, marketing plans, distribution networks, and supply chains based on the current regulatory environment. A tightening of controls, as proposed in the revised rules, would disrupt these trade flows.

Canada respectfully requests that proposed regulatory changes consider the economic impact upon our integrated defence industry.

3. **The proposed regulatory changes should maintain reciprocity regarding export control regulations between trusted partners**

The unilateral imposition of an export licence would increase unnecessary administrative costs in the exchange of defence and security products. Since the Second World War, Canada and the U.S. have not required export permits on many military and strategic goods and technology traded between them under the ITAR, EAR and Canada's Export Control List, an arrangement which Canada believes continues to serve our mutual interests.

From Canada's perspective, the goods and technology that will be affected by this proposed regulatory change do not represent a strategic risk to regional defence and security for export to the United States. However, under the proposed regulatory changes, the same items exported to the U.S. without a Canadian permit would require a U.S. licence to be re-exported back to Canada. This policy change would result in undue administrative burden unbecoming of our historical reciprocity.

Canada respectfully requests that the proposed regulatory changes consider existing policies that promote the reciprocity of trade of controlled goods and technology.

4. **The regulatory changes should reflect ongoing Canadian and U.S. cooperation on export control issues at the multilateral, regional and bilateral levels**

Canada and the U.S. have a long history of cooperation on export control issues at the multilateral, regional and bilateral levels. Both countries, as members of all the multilateral export controls regimes, have worked together to address issues of mutual concern relating to the control of strategic and military goods and technology around the world. The same can be said for the export control-related cooperation of both countries at the Organization of American States.

The establishment of Canada's *Controlled Goods Program,* which aligns itself with the *U.S. International Traffic in Arms Regulations,* and the fact that Canada closely controls the export of ITAR controlled goods and technology from Canada both clearly demonstrate Canada's on-going bilateral commitment to this important issue.

Canada respectfully requests that proposed regulatory changes consider bilateral, regional and multilateral regulatory cooperation commitments and initiatives.

In summary, Canada supports the U.S. Administration's overall goal of strengthening national security by undertaking reforms that will significantly reduce the regulatory burden and costs associated with no- to low-risk transactions of controlled goods. However, Canada is concerned that the proposed imposition of a new licencing requirement would not achieve this objective by causing unnecessary complications to our highly integrated defence industrial base. For these reasons, we respectfully request that the proposed rules be revised to ensure that under their final form, no item will require an export licence to Canada where none is presently required.

During the regulatory review process, Canadian and U.S. officials have maintained a much appreciated dialogue regarding the proposed changes. We remain available for further cooperation to find mutually beneficial solutions.

Additional technical information and questions regarding our concerns are set out below.

1. Canada understands that under the proposed changes to the Department of State (DOS) International Traffic in Arms Regulations (ITAR) - United States Munitions List (USML) Category XII(c), the items identified to remain on the ITAR are understood to be the "highest sensitivity" and as there are no changes proposed to ITAR s.126.5 – "Canadian Exemption", the items remaining in USML Category XII(c) will remain licence free to Canadian federal, territorial, provincial and municipal departments. It is also understood that exports of Department of Commerce (DOC) controlled night vision / optical sensor items could be exported to Canadian Federal departments in accordance with the DOC "GOV Licence Exception".

   Nonetheless, the "second tier" and "less sensitive" night vision / optical sensor items on the DOC – Export Administration Regulations (EAR) - Commerce Control List (CCL), which for decades have benefited from the DOC licence free status to Canada, will now be subject to new licencing requirements to virtually every entity in Canada including Canadian territorial, provincial and municipal departments. The DOC controlled night vision / optical sensor items have extensive and growing uses in commercial applications, such as industrial process control, gas detection, mapping, home inspection, spectroscopy, semiconductor processing, search and rescue, maritime, security surveillance, firefighting, medical imaging, laboratory research, astronomy and automotive applications.

   What statistics, if any, are available on the volume of trade in commercial night vision / optical sensor items that would be affected by the proposed DOC licencing requirements to Canada?

2. As the items to remain on the DOS ITAR are understood to be of the "highest sensitivity", the second generation *Image Intensifier Tubes (IIT)* that will continue to be controlled on the DOS ITAR (i.e., proposed Category XII (c)(1)(i)) will remain licence free under the DOS ITAR s.126.5 - Canadian Exemption for Category XII(c) to Canadian Registered entities. As this is the case, why are the "less sensitive" and "second tier" items on the DOC CCL being proposed to be licenced to Canada?

3. The DOS ITAR proposed parameters for *IITs* should include an additional control criterion, such as a reliability parameter, to address the environment in which these devices will be required to survive, and thereby clearly distinguish these devices from similar commercially available devices from foreign suppliers such as Hamamatsu, Photonis, Delft Electronic Products and Photek.

4. In the DOC EAR and DOS ITAR currently in-force today there is delineation in the DOS ITAR which establishes which *IITs* are controlled by DOS and those controlled by DOC. However, no such delineation exists in the DOS ITAR for *Focal Plane Arrays (FPA)*. According to the current DOS ITAR, only those *FPAs* that are specially designed, modified or configured for military use are currently subject to DOS ITAR control. The DOS ITAR

proposed parameters for *FPA*s should include an additional criterion, such as a reliability parameter, to address the environment these devices will be required to survive in, and thereby clearly distinguish these devices from commercially available devices from foreign suppliers such as Sofradir, Selex and Optikos.

5. In order to conduct an impact analysis of the *FPA* proposed regulations on Canada (industry interests and government programs), under what authority (DOC or DOS) are *FPAs* currently controlled, and what is the current technical criterion which differentiates the jurisdiction between DOC and DOS?

6. In the DOC EAR and DOS ITAR currently in-force today there is delineation in the DOS ITAR which establishes which *IITs* are controlled by DOS and those controlled by DOC. However, no such delineation exists in the DOS ITAR for *Electron Multiplication Charge Coupled Devices* (*EMCCDs*). Although *EMCCDs* are not specifically listed by nomenclature in the DOS ITAR currently in-force today, it is understood that those *EMCCDs* that are deemed to be "other night sighting equipment or systems" that are specially designed, modified or configured for military use are currently subject to DOS ITAR control. The DOS ITAR proposed parameters for *EMCCDs* should include an additional criterion, such as a reliability parameter, to address the environment in which these devices will be required to survive, and thereby clearly distinguish these devices from commercially available devices from foreign suppliers such as E2V and Andor Technologies.

7. In order to conduct an impact analysis of the proposed *EMCCD* regulations on Canada (industry interests and government programs), under what authority (DOC or DOS) are *EMCCDs* currently controlled and what is the current technical criteria which differentiates the jurisdiction between DOC and DOS?

8. The term *"permanent encapsulated sensor assembly"*, is not an industry standard term and, although the proposed regulations provide a subjective definition, how will the exporting community know at what point an item becomes a *"permanent encapsulated sensor assembly"*?

9. For the term *"permanent encapsulated sensor assembly"*, what criteria will be used to gauge what "degree of damage" is sufficient to comply with the requirement?

10. Are there specific examples of *FPAs* that would meet the definition of *"permanent encapsulated sensor assembly"*, and those that would not meet this definition?

11. In the DOC EAR and DOS ITAR currently in-force today there is no definition for *"permanent encapsulated sensor assembly"* to establish what items are controlled by DOS and those controlled by DOC. To conduct an impact analysis of the proposed regulations on Canada (industry interests and government programs), what items are currently considered *"permanent encapsulated sensor assemblies"*, under what authority (DOC or

DOS) are *"permanent encapsulated sensor assemblies"* currently controlled, and what is the current technical criteria which differentiates the jurisdiction between DOC and DOS?

12. Although the term *"camera core"* is used by industry, there are differing opinions amongst manufacturers as to what constitutes a *"camera core"*. How will the public know at what point an item becomes *"camera core"*? Also, it would appear only the proposed DOS ITAR uses the term *"camera core"* and as such, it would be important to clarify what is the equivalent term / area in the proposed DOC EAR.

13. In the proposed DOS ITAR the term *"camera core"* includes additional terms "e.g., modules, engines, kits". Are these terms meant to be equivalent to *"camera core"* and, if so, is there a minimal electronic configuration necessary to establish a "module or kit"?

14. What are the unique characteristics which distinguish a *"fully packaged consumer ready camera"* from a *"camera core"*?

15. In the DOC EAR and DOS ITAR currently in-force today there is no definition for *FPA camera core* to establish what items are controlled by DOS and those controlled by DOC. Although *FPA camera cores* are not specifically listed by nomenclature in the DOS ITAR currently in-force today, it is generally accepted that a *FPA camera core* is the higher level assembly that includes a *FPA* subcomponent, and as such, only those *FPA camera cores* that are specially designed, modified or configured for military use are currently subject to DOS ITAR control.

    In order to conduct an impact analysis of the proposed *FPA camera core* regulations on Canada (industry interests and government programs), what items are currently considered *FPA camera cores*, under what authority (DOC or DOS) are *FPA camera cores* controlled presently and what is the current technical criteria which differentiates the jurisdiction?

16. In the DOC EAR and DOS ITAR currently in-force today there is no definition for *EMCCD camera core* to establish what items are controlled by DOS and those controlled by DOC. Although *EMCCD camera cores* are not specifically listed by nomenclature in the DOS ITAR currently in-force today, it is understood that those *EMCCD camera cores* that are deemed to be specially designed or modified components of "other night sighting equipment or systems" that are specially designed, modified or configured for military use are currently subject to DOS ITAR control.

    In order to conduct an impact analysis of the proposed *EMCCD camera core* regulations on Canada (industry interests and government programs), what items are currently considered *EMCCD camera cores*, under what authority (DOC or DOS) are *EMCCD camera cores* currently controlled and what is the current technical criteria which differentiates the jurisdiction between DOC and DOS?

17. Although the "chapeau" text for the DOC CCL Export Commodity Control Number (ECCN) 6A615 identifies the category as "military", the individual items are not described with the phrase "*are "specially designed" for a USML defence article or a "600 series" ECCN*" as they are specified in other entries in the 600 series. What was the rationale for removing the phrase "*are "specially designed" for a USML defence article or a "600 series" ECCN*"?

18. *Read Out Integrated Circuits (ROIC)*, both off-the-shelf and custom designs, are available from various manufacturers worldwide such as Xenics Infrared Solutions, AIM Intranot-Module, and New Imaging Technologies. The technology necessary to develop and manufacture *ROICs* has been available internationally for many years. The proposed DOC EAR establishes a worldwide control with a presumption of denial. What statistics are available on the volume of trade in commercial *ROICs*, the technology for the development of *ROICs*, and the technology for the production of *ROICs* that would be affected by the proposed DOC licencing requirements to Canada?

HARRIS

HARRIS CORPORATION

1025 West NASA Boulevard
Melbourne, FL USA 32919
phone 1-321-727-9100

July 1, 2015

U.S. Department of State
Bureau of Political – Military Affairs
Directorate of Defense Trade Controls
2401 E. St, NW
12th Floor, SA-1
Washington, D.C. 25022

U.S. Department of Commerce
Bureau of Industry and Security
Regulatory Policy Division
1401 Constitution Ave NW
Room 2099B
Washington, D.C. 20130

Ref: ITAR Amendment – Category XII; RIN 1400-AD32 / Public Notice 9110
EAR Amendment – RIN0694-AF75

Harris Corporation is pleased to comment on the proposed revisions to U.S. Munitions List (USML) Category XII and the corresponding controls on the Commerce Control List. Harris appreciates the work that went into crafting the revisions and is encouraged with the continued progress on the Export Control Reform Initiative. However, while the positive listing of items subject to controls, particularly as addressed in the XII(e) enumerated parts and components subparagraphs, is a welcome improvement on the current regulations, we are disappointed that many items with widespread commercial availability in foreign markets will remain controlled under the ITAR, hampering our ability to compete effectively in the global marketplace. We sincerely hope that the proposed changes are a first step towards ultimately relaxing controls on items that no longer merit heightened restrictions for exports to our allies and friendly foreign governments.

ITAR Amendments

Specially Designed Parts and Components

The proposed rule creates an apparent control inversion between the generic specially designed "catch-all" language within the proposed USML XII(c)(1) and XII(c)(13) entries and the specifically enumerated parts, components and other commodities included in the proposed USML XII (e)(2)(i) – (vii) and USML XII(e)(9), and (12) entries.

The IIT parts and components enumerated within XII (e)(2) represent the most critical and sensitive parts and components of an image intensifier tube due to their unique contributions to military night vision systems utilizing IIT. The listing of those parts and components helpfully adds specific performance and quantitative criteria which provide a bright line for quick identification of the parts and components intended to be controlled.

However, the proposed USML XII(c)(1) entry, which describes the IIT's to which XII (e)(2) applies, contains its own specially designed parts and components "catch-all" clause. This results in an apparent logical paradox that subjects non-enumerated specially designed parts and components excluded from the scope of USML XII (e) (2) to higher level controls as Significant Military Equipment (SME), as they would necessarily be captured within USML XII(c)(1) by default. For example, under the proposed rule, a specially designed sub component of a XII(e)(2)(vi) miniature autogated power supply would be controlled under XII(c)(1) as SME, representing a higher level of control for the lower level part than the completed autogated power supply component .

To address this issue, Harris recommends that the generic, specially designed parts and components "catch-all" language be removed from USML XII(c)(1) and that equivalent language be added to USML XII(e)(2) as follows:

> *(c) Infrared focal plane arrays, image intensifier tubes, night vision, electro-optic, infrared and terahertz systems, equipment and accessories, including cameras and cores, as follows:
>
> (1) Image intensifier tubes (IITs) having a peak response within the wavelength range exceeding 400 nm but not exceeding 2,050 nm and incorporating either a microchannel plate described in paragraph (e)(2)(i) of this category or electron sensing device described in paragraph (e)(2)(iv) of this category, as follows: [~~**and specially designed parts and components therefor:**~~]
>
> *****
>
> (e) Parts, components, accessories, attachments, and associated equipment as follows:
>
> *****
>
> (2) Image intensifier tube (IIT) parts and components as follows:
>
> *****
>
> **(viii) Parts and components specially designed for IIT's identified in USML XII(c)(1).**

The proposed revisions recommended above additionally ensure alignment with language contained within **Note 2 to paragraph (f)**, which identifies IITs and their parts and components as being controlled within two distinct entries.

> "…*IITs controlled in paragraph (c)(1)* of this category and their *parts and components controlled in paragraph (e)(2)* of this category…" [emphasis added]

The proposed entries for USML XII(c)(12) and (13) relating to binoculars, goggles, and other imaging systems and infrared imaging cores also include "specially designed" catch all clauses which create a similar control inversion problem (SME vs. non-SME) with respect to the parts and components specifically identified in proposed USML XII(e)(9), and (12).

Harris recommends that the specially designed language of USML XII(c)(12) and (13) likewise be omitted, and that language with similar effect be inserted as a new entry into the text of USML XII(e)(9), and (12) to ensure that parts and components intended to be "caught" under USML XII(c)(12) and (13) are identified and proportionally controlled, as follows:

> *(c) Infrared focal plane arrays, image intensifier tubes, night vision, electro-optic, infrared and terahertz systems, equipment and accessories, including cameras and cores, as follows:

****

(12) Infrared imaging camera cores (e.g., modules, engines, kits), [~~**and specially designed electronics and optics therefor,**~~] having any of the following:

(13) Binoculars, bioculars, monoculars, goggles, or head or helmet-mounted imaging systems or equipment (including video-based articles having a separate near-to-eye display) that incorporate or are specially designed to incorporate any of the following, [~~**and specially designed electronics, optics, and displays therefor:**~~]

*****

(e) Parts, components, accessories, attachments, and associated equipment as follows:

*****

(9) **Optics, i**nfrared lenses, mirrors, beam splitters or combiners, filters, and treatments and coatings, specially designed for any article controlled in this category;

*****

(12) **Displays (including near-to-eye displays)** specially designed for articles controlled in this category;

Harris notes that its recommended revision of USML XII(e)(12) does not overlap with the current proposed entry at USML XII(c)(18), "Near to eye display *systems or equipment*..." [emphasis added], as the former is obviously intended to encompass the display component, whereas the latter addresses completed systems or equipment, more logically subject to control as SME.

Note to paragraph A of note 2 to paragraph (f)

After careful study of this note, Harris concludes that the listed technical data exclusion categories are limited exclusively to data and classes of activity relating to IRFPAs rather than broadly to all the items discussed within Note 2 to paragraph (f), e.g. lasers, ITTs, etc. If the desired intent is properly understood, Harris suggests the following revision to avoid the potential for ambiguity:

Current proposed rule wording:

> **Note to paragraph A of Note 2 to paragraph (f):** Technical data does not include information directly related to basic operating instructions, testing results, incorporating or integrating IRFPAs into higher level packaged assemblies not enumerated in this category, or external interface control documentation associated with such assemblies or assemblies subject to the EAR, provided such information does not include design methodology, engineering analysis, or manufacturing know-how for a USML controlled IRFPA.

Recommended revision:

> **Note to paragraph A of Note 2 to paragraph (f):** Technical data **directly related to IRFPAs** does not include information ~~**directly related to**~~ **on** basic operating instructions, testing results,

incorporating or integrating IRFPAs into higher level packaged assemblies not enumerated in this category, or external interface control documentation associated with such assemblies or assemblies subject to the EAR, provided such information does not include design methodology, engineering analysis, or manufacturing know-how for a USML controlled IRFPA.

EAR Amendments

It appears that EAR 742.6(a)(8)(ii) will require that a license be obtained to export or re-export to Canada, items subject to control under ECCN 6A002 for Regional Stability (RS) purposes.

The licensing requirement would be a departure from the way more sensitive items are controlled under U.S. Munitions List (USML) Category XII(c). By way of example, if a Generation 3 image intensifier tube (IIT) is incorporated into a commercial direct view night vision system, the system would be controlled under ECCN 6A002.c, as described in Note 2 to paragraph XII(c) on the USML. If the same IIT were incorporated into a night vision device specially designed for the military, it would be controlled under USML XII(c)(13). The new RS control would require a license to Canada for the 6A002.c item, while by contrast the ITAR exemption at 22 CFR 126.5(b) and (d) would continue to authorize exports, re-exports, and retransfers of XII(c)(13) items to certain end users in Canada.

At a high level, following is a summary of the ITAR exemption as it applies to USML XII(c) items:

- Canadian government entities (e.g., federal , provincial, territorial, or municipal) are eligible to receive: 1st- and 2nd-generation image intensification tubes and night sighting equipment, 3rd-generation end items

- Canadian-registered persons are eligible to receive: 1st- and 2nd-generation image intensification tubes and night sighting equipment

It does not appear that 6A002.c items would be eligible for EAR exceptions STA or GOV for exports to the end users identified in the ITAR exemption.

Harris respectfully requests that the Commerce Department consider the implementation of EAR licensing exception authority for 6A002 items similar to the Canadian license exemption authority available for items subject to control under USML XII(c).

Sincerely,

Mary C. Menz
Vice President, Corporate Trade Compliance
Harris Corporation

cc: Ron Roos
Deputy General Counsel
Exelis, Inc.

assuredcommunications™

From: Jennifer Douris <jenniferd@spie.org>
Sent: Monday, July 06, 2015 6:05 PM
To: PublicComments
Subject: RIN0694-AF75
Attachments: STATE.docx; 2012 Guide-IR.pdf; A3_Dual.pdf; AIM_SX095.pdf; AMPS_Airborne Missile Protection System.pdf; Atom1024.pdf; Bird-XGA.pdf; Blackbird.pdf; Bosch.pdf; Cardinal 640.pdf; CI Systems SWIR Test Station.pdf; CI Systems Test Station FLIR.pdf; CI Systems Test Station.pdf; cougar640.pdf; EMCCD_Synapse_01.pdf; GWIR UFPAs.pdf

Regulatory Policy Division
Bureau of Industry and Security
U.S. Department of Commerce
14th Street and Pennsylvania Ave., N.W.
Room 2099B
Washington, D.C. 20230

Subject: Revisions to the Export Administration Regulations (EAR): Control of Fire Control, Range Finder, Optical, and Guidance and Control Equipment

To Whom It May Concern:

On behalf of SPIE, the international society for optics and photonics, we appreciate the opportunity to comment on the proposed changes to the USML. SPIE is the largest international not-for-profit society in optics, photonics and imaging. Together with our 18,000 individual members and 600 corporate members, the Society seeks to build a better world with light through scientific education and innovation.

[Please see the attached document "STATE" and supporting product information for a more detailed assessment of the provisions within the proposal. Due to size limitations, SPIE will submit multiple comments with the remaining supporting documentation. Attached zip file includes A-G]

Photonics is an exciting growth area based on light. Photonic components, optics, sensors, fibers, lasers, photodetectors, light modulators, lasers etc., themselves make up a substantial global product market of more than $150 billion, with around 700,000 jobs. When basic photonic products are added (such as displays, the optical telecommunications hardware, equipment for precision production and metrology for manufacturing, solar energy converters, LED lighting, cameras and light based medical instruments) the product market is calculated at $500 billion with 2.2 million jobs worldwide. Photonics, as an enabling technology, underpins many trillions in the services of today's economy, including data, entertainment, and e-commerce. Advances in photonics are key to the future of consumer brand name companies such as Google, Facebook, as well as realizing solutions to familiar diseases.

SPIE supports an overhaul of U.S. export controls to save American jobs and better protect our most sensitive military items through the Export Control Reform (ECR) initiative that was launched in 2009. Current guidelines are vague,

inconsistent and outdated. Overly restrictive regulation on dual-use technologies, and the inconsistent interpretation/ enforcement of regulations have created business, research, and workforce barriers that are limiting U.S. leadership in science and technology. Government export rules have driven high-tech jobs abroad and have made U.S. companies uncompetitive in the global marketplace. We are losing business to foreign companies that use "ITAR-free" as a marketing slogan. According to the White House, ECR was launched "with the goal of strengthening national security and the competitiveness of key U.S. manufacturing and technology sectors by focusing on current threats, as well as adapting to the changing economic and technological landscape. This review determined that the current export control system is overly complicated, contains too many redundancies, and, in trying to protect too much, diminishes our ability to focus our efforts on the most critical national security priorities." In an April 2010 speech regarding the ECR Initiative, Secretary Robert Gates stated that we need a system where "higher walls are placed around fewer, more critical items."

However, the proposal for Category XII deviates greatly from these core principles of the Export Control Reform (ECR) Initiative. The proposal for Category XII is far more complex and confusing than the current Category XII, and contains multiple redundancies. Instead of limiting the list to "fewer items", this proposal is actually expansive in the list of commodities it proposes to control. Spreading enforcement resources thin by trying to control too much, and not focusing on the most critical military technologies will ultimately hurt U.S. national security.

Furthermore, the proposal does not properly recognize the foreign availability of many of the commodities that it proposes to control. (See attached doc "STATE" and supporting documentation). Commercial markets dominate sales of many technologies described in the Category XII proposal. For example, there are at least 9 companies located in 7 countries outside the US, manufacturing uncooled infrared detectors. All of those countries control those items as commercial/dual-use.

It has been stated previously that there is a high rate of approval to companies that apply for licenses to the Department of State for USML controlled items. Therefore, the conclusion being, why is there really a problem with an item being listed on the USML, DoD just wants the chance to review the item before export. However the realities of the market place prevent many companies from even getting to the point of applying for an export license with the State Department. Reported approval times from companies vary, but we have been told they take generally around 2-3 months for an application. Why would a foreign client wait for a determination from the State Department when similar items are being sold without a license requirement, and arrive in a matter of days or weeks? For example:

- China, Pearmain 384x288, 50 Hz uncooled core, lead time 1 to 7 days. http://pearmain.manufacturer.globalsources.com/si/6008813092486/pdtl/Thermal-imaging/1025737934/Thermal-Camera-Module.html

- China, Dali 384x288, 50 Hz uncooled core, lead time 2-4 weeks (200 units), http://www.ir-thermalimagingcamera.com/sale-2713265-8-14um-ip54-industrial-thermal-imaging-module-for-security-surveillance.html

- Taiwan & Canada, Allied Scientific Pro either a 640x480 or a 384x288, 60 Hz uncooled core, lead time 2 weeks (up to 1000 units) http://alliedscientificpro.com/shop/uncooled-lwir-infrared-sensor-8-to-14-microns/

The additional revenue gained by export sales to foreign markets, is revenue that can be reinvested back into companies, fueling rapid growth. Overtime this revenue loss has a great impact on companies prevented from competing in the global marketplace. Ultimately, this is likely to result in a reduction of the industrial base in the U.S., as seen in the commercial satellite industry. If the U.S military is forced to buy these items from foreign countries, this also becomes a national security issue.

Another issue repeated in this proposal is language stating that any products that result from developmental research funded by the Department of Defense would have a default designation of ITAR [Paragraph (b)(14); Paragraph (c)(21); Paragraph (d)(9)]. There is a note listing some exceptions to this language, including a DoD contract or other funding authorization stating that the developmental research is meant for Dual-use purposes, a commodity jurisdiction determining the item EAR, or if the product is in production. However, these exceptions are difficult to utilize. Obtaining dual-use language in a defense contract is no easy task. Companies often lack the leverage to request changes to contracts. This is especially true if a company is a subcontractor and the base contract has already been negotiated and closed. We have also been told that contracting officers are instructed to not make ITAR designations via the contract.

The other exception is if a company receives a commodity jurisdiction (CJ) designating the item to fall under EAR. However, no company will invest the time and money needed to develop a commercial application with the uncertainty of a CJ application, needed upon completion. Though every product developed in the U.S. could potentially be subject to a CJ application determination, the default designation as written in the proposal would make investment in commercial applications an impractical risk. Companies therefore would need to make the determination whether accepting DoD funding is worth forfeiting potential revenue from commercial applications. DoD developmental research funding is often pursued for the commercial potential of the underline technology, not for one or two items to be sold to the military. There is no guarantee that Defense funded research will lead to significant purchase of any product resulting from the research. Therefore forcing companies to draw this line regarding defense funded developmental research could mean that DoD will reduce the pool of companies willing to use their technological expertise to produce an item specifically for a military application.

An example of DoD funded developmental research that turned into the development of items with significant commercial application is the Quantum Cascade Laser (QCL). DoD has generally funded activities to advance certain wavelengths in QCLs. The underlying physics and the technology has now been applied across most wavelengths in the mid-IR, enabling the commercialization of the entire spectrum. As a result, hundreds of lasers have been sold into research institutions where advances are being made by scientist and Nobel prize winners around the world in areas of Life Sciences, Medical diagnostics, and Environmental studies. One of the systems based on this technology recently discovered a previously unknown subclass of renal carcinoma cell cancer by the NIH. The DoD funded this research without ITAR restrictions.

Another example of DoD funded developmental research is specialty laser fibers. Unlike QCL technology, industry has primarily funded the development of this technology. However, as part of a strategy to make the most of the return on investment, some defense funding was accepted via a subcontract to develop a specific defense application. Often

companies who have spent considerable dollars on financing developmental research with commercial applicability in mind will also accept a small subcontract (less than 2% of overall investment in research funding) to develop a military application specifically for military purposes. Though it is possible that the commodity developed for military purposes ends with a lucrative defense contract to purchase the specific product, it is by no means a guaranty. Therefore, accepting a subcontract for a military application on privately funded research, such as specialty laser fibers, would no longer be worth the risk of classifying any item developing from the entire developmental research as ITAR.

The proposal for Category XII would also regulate companies to performance parameters that are either simply at the edge of today's commercial market or intruding on the commercial market, as opposed to defining parameters unique to military sensitive items (See Comments in Attached Doc "STATE"). This approach is troublesome considering the rapid movement of technology, contrasted with the extremely slow and difficult process of changing U.S. regulations.

Where appropriate military parameters cannot be found or agreed upon, the "specially designed" criteria (as defined in §120.41 of the USML) should be utilized to ensure that dual-use technologies do not fall under the USML. Another solution to limit an overly expansive Category XII USML is to align the list with the applicable internationally agreed upon Wassenaar Munitions List, to ensure equal footing with our allies. Based on the input received from impacted U.S. companies, it is SPIE's position that this proposal needs to be fundamentally rewritten in order to better align with commercial market realities and to follow the ECR principles that initiated this review.

Many of the companies that SPIE has spoken with also take issue with the EAR companion rule released by the Department of Commerce. For both proposed rules, companies have stated that they are so confusing the company is unlikely to comment because they cannot read it and ascertain the implications. What is clear from reviewing the EAR proposed rule is that many of the license exceptions are being removed and that worldwide Regional Stability Control is being imposed with a presumption of denial to many of the applicable ECCNs. The benefit of moving dual-use technologies over to the CCL is the flexibility this list can provide, especially when exporting to friendly countries. This benefit no longer exists if a company is required to get a license in order to sell to Canada. This level of control is not justified given the global commercial availability of many of these products, and stands to continue to put U.S. companies at a commercial disadvantage.

If you require any further information, please contact Jennifer Douris, SPIE Government Affairs Director, at 202-246-7348 or via email at Jenniferd@spie.org.

Sincerely,

Eugene Arthurs
CEO
SPIE, the international society for optics and photonics

[Billing Code 4710-25]

DEPARTMENT OF STATE

22 CFR Part 121

RIN 1400-AD32

[Public Notice:]

Amendment to the International Traffic in Arms Regulations: Revision of U.S. Munitions List Category XII.

AGENCY: Department of State.

ACTION: Proposed rule.

SUMMARY: As part of the President's Export Control Reform effort, the Department of State proposes to amend the International Traffic in Arms Regulations (ITAR) to revise Category XII (fire control, range finder, optical and guidance and control equipment) of the U.S. Munitions List (USML) to describe more precisely the articles warranting control on the USML. The revisions contained in this rule are part of the Department of State's retrospective plan under E.O. 13563 completed on August 17, 2011. The Department of State's full plan can be accessed at http://www.state.gov/documents/organization/181028.pdf.

DATES: The Department of State will accept comments on this proposed rule until [insert date 60 days from date of publication in the *Federal Register*].

ADDRESSES: Interested parties may submit comments within 60 days of the date of publication by one of the following methods:

- E-mail: *DDTCPublicComments@state.gov* with the subject line, "ITAR Amendment – Category XII."

Comment [1]: The proposed rule does not meet the goals of export control reform which is higher fences around fewer items. Rather it seeks to move items to the 600 series or remove license exceptions from commodities such as FPAs and impose license requirements to items being shipped to Canada. Furthermore, it seeks to roll back controls on linear arrays that had been licensable under Commerce. The carve out rule which allowed military image intensifier tubes and focal plane arrays when incorporated in to a civil product has been restricted further requiring parts to be unserviceable and thereby rolls back many items that were exportable through Commerce. The rule seeks to define ambiguously new terms such as core and permanently encapsulated without any thought about the implications of exporters who need to understand them not to mention why such terms are even needed. Furthermore, much of what is captured is produced and manufactured and controlled by non-US companies. This falls short of the "crown jewels" that Sec Gates referred to in his speech of 2010.

I would recommend a completely new approach to the USML proposed rule as well as the Commerce Companion rule for the following reasons:
1. The proposed language captures existing civilian items as well as future ones.
2. Parts of the proposed language are ambiguous and would lead to additional commodity jurisdiction filings.
3. The proposed language does not meet the objectives of ECR which is higher fences around fewer items.
4. The proposed language recaptures items previously determined to be subject to the EAR since the carveout language has been weakened as well as ignoring on CCL which has ECCN of 6A002.a.3.d to identify linear focal plane arrays which are listed in this draft.
5. The proposed language does not provide any military parameters rather it relies on dual-use parameters like detector count and wavelength.
6. The 120+ page companion rule is too complex. It appears to remove important license exceptions and destinations as well as create new ECCNs that would require me to hire additional staff to review and keep up the language which would dissuade me from wanting to seek exports for my products.

I would suggest that if another attempt is made at revising the language, that it should start with taking the existing language in Cat 12 and replace specifically with "specially designed". Therefore the use of specially designed is the only way to draw a clear line. If the military is the only customer for an item it should be on the USML, if there is a civil market it should be considered a dual use item in order to keep US industry at the fore front of innovation. To do otherwise will allow foreign manufacturers to continue to use No ITAR controls as a way to innovate and buy US companies. Ultimately the US warfighter could be buying more capable systems from foreign sources as it does now (KC tanker program and clip-on weapon sight program).

- Internet: At *www.regulations.gov,* search for this notice by using this rule's RIN (1400-AD32).

Comments received after that date will be considered if feasible, but consideration cannot be assured. Those submitting comments should not include any personally identifying information they do not desire to be made public or any information for which a claim of confidentiality is asserted. All comments and transmittal e-mails will be made available for public inspection and copying after the close of the comment period via the Directorate of Defense Trade Controls website at *www.pmddtc.state.gov*. Parties who wish to comment anonymously may do so by submitting their comments via *www.regulations.gov*, leaving the fields that would identify the commenter blank and including no identifying information in the comment itself. Comments submitted via *www.regulations.gov* are immediately available for public inspection.

FOR FURTHER INFORMATION CONTACT: Mr. C. Edward Peartree, Director, Office of Defense Trade Controls Policy, Department of State, telephone (202) 663-2792; e-mail *DDTCPublicComments@state.gov*. ATTN: Regulatory Change, USML Category XII.

SUPPLEMENTARY INFORMATION: The Directorate of Defense Trade Controls (DDTC), U.S. Department of State, administers the International Traffic in Arms Regulations (ITAR) (22 CFR parts 120-130). The items subject to the jurisdiction of the ITAR, *i.e.*, "defense articles," are identified on the ITAR's U.S. Munitions List (USML) (22 CFR 121.1). With few exceptions, items not subject to the export control jurisdiction of the ITAR are subject to the jurisdiction of the Export Administration Regulations ("EAR," 15 CFR parts 730-774, which includes the Commerce Control List (CCL) in Supplement No. 1 to Part 774), administered by the

Bureau of Industry and Security (BIS), U.S. Department of Commerce. Both the ITAR and the EAR impose license requirements on exports and reexports. Items not subject to the ITAR or to the exclusive licensing jurisdiction of any other set of regulations are subject to the EAR.

Revision of Category XII

This proposed rule revises USML Category XII, covering fire control, range finder, optical and guidance and control equipment, to advance the national security objectives set forth above and to more accurately describe the articles within the category, in order to establish a "bright line" between the USML and the CCL for the control of these articles.

Paragraph (a) is revised to add subparagraphs (1) through (9) to more clearly describe the articles controlled in (a).

Paragraph (a)(1) is added for fire control systems and equipment.

Paragraph (a)(2) is added for weapons sights and weapons aiming or imaging systems, with certain infrared focal plane arrays, image intensifier tubes, ballistic computers, or lasers.

Paragraph (a)(3) is added for electronic or optical weapon positioning, laying, or spotting systems or equipment.

Paragraph (a)(4) is added for certain laser spot trackers and laser spot detectors.

Paragraph (a)(5) is added for bomb sights and bombing computers.

Paragraph (a)(6) is added for electro-optical missile or ordnance tracking or guidance systems.

Paragraph (a)(7) is added for electro-optical systems or equipment that automatically detect and locate weapons launch or fire.

Paragraph (a)(8) is added for certain remote wind sensing systems or equipment for enhanced targeting.

Paragraph (a)(9) is added for certain helmet mounted display (HMD) systems.

Paragraph (b) is revised to add subparagraphs (1) through (14) to more clearly describe the articles controlled in (b).

Paragraph (b)(1) is added for laser target designators or coded target markers.

Paragraph (b)(2) is added for certain infrared laser aiming or target illumination systems.

Paragraph (b)(3) is added for certain laser range finders.

Paragraph (b)(4) is added for certain targeting or target location systems.

Paragraph (b)(5) is added for optical augmentation systems.

Paragraph (b)(6) is added for certain light detection and ranging (LIDAR), laser detection and ranging (LADAR), or range-gated systems and includes a carve out for certain LIDAR systems for civil automotive applications.

Paragraph (b)(7) is added for certain synthetic aperture LIDAR or LADAR systems.

Paragraph (b)(8) is added for LIDAR, LADAR, or other laser range-gated identified in subparagraphs (i) – (vi).

Paragraph (b)(9) is added for certain lasers for electronic combat systems controlled in Category XI(a)(4).

Paragraph (b)(10) is added for certain tunable semiconductor lasers.

Paragraph (b)(11) is added for certain non-tunable single transverse mode semiconductor lasers.

Paragraph (b)(12) is added for certain non-tunable multiple transverse mode semiconductor lasers.

Paragraph (b)(13) is added for laser stacked arrays identified in subparagraphs (i) – (iv).

Paragraph (b)(14) is added for developmental lasers funded by the Department of Defense.

Paragraph (c) is revised to add subparagraphs (1) through (21) to more clearly describe the articles controlled in (c).

Paragraph (c)(1) is added for certain second and third generations image intensifier tubes (IITs).

Paragraph (c)(2) is added for certain photon detector, microbolometer detector, or multispectral detector infrared focal plane arrays (IRFPAs).

Paragraph (c)(3) is added for certain one-dimensional photon detector IRFPAs in a permanent encapsulated sensor assembly.

Paragraph (c)(4) is added for certain two-dimensional photon detector IRFPAs in a permanent encapsulated sensor assembly.

Paragraph (c)(5) is added for certain microbolometer IRFPAs in a permanent encapsulated sensor assembly.

Paragraph (c)(6) is added for multispectral IRFPAs in a permanent encapsulated sensor assembly.

Paragraph (c)(7) is added for certain charge multiplication focal plane arrays.

Paragraph (c)(8) is added for certain charge multiplication focal plane arrays in a permanent encapsulated sensor assembly.

Paragraph (c)(9) is added for certain integrated IRFPA dewar cooler assemblies (IDCAs).

Paragraph (c)(10) is added for gimbals with two or more axes of active stabilization having a minimum root-mean-square (RMS) stabilization better (less) than 200 microradians.

Paragraph (c)(11) is added for gimbals with two or more axes of active stabilization having a minimum root-mean-square (RMS) stabilization better (less) than 100 microradians.

Paragraph (c)(12) is added for infrared imaging camera cores identified in subparagraphs (i) – (xi). Camera cores meeting the shock tolerance criteria described in (c)(12)(ii) are controlled on the USML whether or not they are tested to meet these criteria.

Paragraph (c)(13) is added for binoculars, bioculars, monoculars, goggles, or head- or helmet-mounted imaging systems with IITs or camera cores controlled in this category.

Paragraph (c)(14) is added for certain targeting systems.

Paragraph (c)(15) is added for infrared search and track (IRST) systems.

Paragraph (c)(16) is added for infrared imaging systems identified in subparagraphs (i) – (ix).

Paragraph (c)(17) is added for certain terahertz imaging systems.

Paragraph (c)(18) is added for near-to-eye display systems or equipment, specially designed for articles controlled in this subchapter.

Paragraph (c)(19) is added for systems or equipment that project radiometrically calibrated scenes directly into the entrance aperture of an electro-optical or infrared (EO/IR) sensor controlled in this subchapter within either the spectral band exceeding 10 nm but not exceeding 400 nm, or the spectral band exceeding 900 nm but not exceeding 30,000 nm.

Paragraph (c)(20) is added for certain systems or equipment incorporating an infrared beacon or emitter specially designed for Identification Friend or Foe (IFF) and specially designed parts and components therefor.

Paragraph (c)(21) is added for developmental imaging systems funded by the Department of Defense.

A note is added to paragraph (c) to address the incorporation of these defense articles into commercial items. With minor exceptions, all bare IRFPAs are controlled in Category XII, paragraph (c)(2). However, once an IRFPA has been incorporated into a permanent encapsulated sensor assembly, it ceases to be controlled in paragraph (c)(2) because it is incorporated into a higher order assembly. The permanent encapsulated sensor assembly will be controlled in paragraphs (c)(3) – (6), if it meets the control parameters of one of those paragraphs. These control parameters are set at a level that the Department has determined excludes most commercial products. Further, once most IRFPAs and permanent encapsulated sensor assemblies are incorporated into a camera core, monocular, or binocular or other higher order system, that system will not be subject to the ITAR or require authorization from the Department for export, unless it is specifically enumerated. Most multi-spectral IRFPAs and IRFPAs with charge multiplication are excluded from the note and remain subject to the ITAR, even when incorporated into higher order assemblies or end-items. IRFPA, permanent encapsulated sensor assemblies, camera cores, monoculars, binoculars, and other higher order systems not enumerated on the USML are generally subject to the EAR.

Paragraph (d) is revised to move controls on Global Navigation Satellite System (GNSS) equipment from Category XV and to add subparagraphs (1) through (9) to more clearly describe the articles controlled in (d).

Paragraph (d)(1) is added for certain guidance or navigation systems.

Paragraph (d)(2) is added for certain accelerometers.

Paragraph (d)(3) is added for certain gyroscopes or angular rate sensors.

Paragraph (d)(4) is added for certain mobile relative gravimeters.

Paragraph (d)(5) is added for certain mobile gravity gradiometers.

Paragraph (d)(6) is added for Global Navigation Satellite System receiving equipment from Category XV.

Paragraph (d)(7) is added for certain GNSS anti-jam systems employing adaptive antennas.

Paragraph (d)(8) is added for certain GNSS security devices.

Paragraph (d)(9) is added for developmental guidance, navigation, or control devices, systems or equipment funded by the Department of Defense.

Paragraph (e) is revised to add subparagraphs (1) through (15) to more clearly describe the parts and components controlled in (e).

A significant aspect of this more positive, but not yet tiered, proposed USML category is that it does not contain controls on all generic parts, components, accessories, and attachments that are specifically designed or modified for a defense article, regardless of their significance to maintaining a military advantage for the United States. Rather, it contains, with a few exceptions, a positive list of specific types of parts, components, accessories, and attachments that continue to warrant control on the USML. The exceptions pertain to those parts, components, accessories, and attachments identified as "specially designed."

Paragraph (e)(1) is added for specially designed optical sensors for electronic combat systems controlled in Category XI(a)(4).

Paragraph (e)(2) is added for certain image intensifier tube (IIT) parts and components identified in subparagraphs (i) – (vii).

Paragraph (e)(3) is added for certain wafers incorporating structures for Read-Out Integrated Circuits (ROICs) controlled in (e)(4) or (e)(5) or for IRFPA detectors controlled in (c)(2).

Paragraph (e)(4)is added for ROICs specially designed for IRFPAs.

Paragraph (e)(5) is added for certain ROICs specially designed for a system, camera core, or packaged IRFPA controlled in paragraph (c).

Paragraph (e)(6) is added for specially designed vacuum packages or other sealed enclosures for an IRFPA or IIT controlled in paragraph (c).

Paragraph (e)(7) is added for integrated IRFPA dewar cooler assembly (IDCA) parts and components identified in subparagraphs (i) – (iv).

Paragraph (e)(8) is added for specially designed IRFPA Joule-Thomson (JT) self-regulating cryostats.

Paragraph (e)(9) is added for specially designed infrared lenses, mirrors, beam splitters or combiners, filters, and treatments and coatings.

Paragraph (e)(10) is added for specially designed drive, control, signal or image processing electronics.

Paragraph (e)(11) is added for signal processing electronics identified in subparagraphs (i) – (iii).

Paragraph (e)(12) is added for specially designed near-to-eye displays.

Paragraph (e)(13) is added for specially designed resonators, receivers, transmitters, modulators, gain media, and drive electronics or frequency converters.

Paragraph (e)(14) is added for two-dimensional infrared scene projector emitter arrays (i.e., resistive arrays) that emit infrared radiation within the 900 nm to 30,000 nm wavelength range.

Paragraph (e)(15) is added for classified parts, components, accessories, attachments, and associated equipment.

A note is added to paragraph (e) to address the incorporation of these defense articles into commercial items.

Paragraph (f) is revised to more clearly describe the technical data and defense services controlled in paragraph (f).

Three notes are added to paragraph (f) to address technical data and defense services when incorporating defense articles into commercial items. Note 1 clarifies that technical data directly related to IITs, IRFPAs, integrated IRFPA dewar cooler assemblies and related wafers and ROICs controlled in this Category remains USML controlled, even when those defense articles are part of a system that is subject to the EAR. Note 2 enumerates certain technical data and software that are directly related to the defense articles controlled in this Category in paragraphs A, B, and C. It also includes a note to paragraph A, identifying certain technology that is not technical data. Note 3 states that certain technology for the incorporation or integration of IRFPAs and IITs in to items subject to the EAR, including into permanent encapsulated sensor assemblies, is subject to the EAR.

A new (x) paragraph has been added to USML Category XII, allowing ITAR licensing for commodities, software, and technology subject to the EAR provided those commodities, software, and technology are to be used in or with defense articles controlled in USML Category XII *and* are described in the purchase documentation submitted with the application.

Finally, articles common to the Missile Technology Control Regime (MTCR) Annex and the USML are to be identified on the USML with the parenthetical "(MT)" at the end of each section containing such articles. A

separate proposed rule will address the sections in the ITAR that include MTCR definitions.

The following definitions explain and amplify terms used in this Category and are provided to assist exporters in understanding the scope of the proposed control.

Charge multiplication is a form of electronic image amplification, the generation of charge carriers as a result of an impact ionization gain process.

Focal plane array is a linear or two-dimensional planar layer, or combination of planar layers, of individual detector elements, with or without readout electronics, which work in the focal plane.

Note: This definition does not include a stack of single detector elements or any two, three, or four element detectors provided time delay and integration is not performed within the element.

Image intensifier tube refers to an imaging device that incorporates a photoemissive transducer (i.e., photocathode) and achieves electron image amplification in the vacuum space.

Microbolometer is a thermal imaging detector that, as a result of a temperature change in the detector caused by the absorption of infrared radiation, is used to generate a usable signal.

Multispectral refers to producing discrete outputs associated with more than one spectral band of response.

Request for Comments

As the U.S. Government works through the proposed revisions to the USML, some control parameters are proposed recognizing that they will control items in normal commercial use and on the Wassenaar Arrangement's Dual Use List. With the thought that multiple perspectives would be beneficial to the USML revision process, the Department

welcomes the assistance of users of the lists and requests input on the following:

1) A key goal of this rulemaking is to ensure the USML and the CCL together control all the items that meet Wassenaar Arrangement commitments embodied in Munitions List Categories 5, 11 and 15 (WA-ML15) and the relevant Dual Use List Categories including the IRFPAs in Category 6 (WA-DU 6.A.2). To that end, the public is asked to identify any potential lack of coverage brought about by the proposed rules for Category XII contained in this notice and the new and revised ECCNs published separately by the Department of Commerce when reviewed together.

2) Another key goal of this rulemaking is to identify items proposed for control on the USML or the CCL that are not controlled on the Wassenaar Arrangement's Munitions or Dual Use List. The public is asked to identify any items proposed for control on the USML that are not controlled on the Wassenaar Arrangement's Munitions or Dual Use List.

3) A third key goal of this rulemaking is to establish a "bright line" between the USML and the CCL for the control of these materials. The public is asked to provide specific examples of control criteria that do not clearly describe items that would be defense articles and thus do not establish a "bright line" between the USML and the CCL.

4) Although the proposed revisions to the USML do not preclude the possibility that items in normal commercial use would or should be ITAR-controlled because, *e.g.*, they provide the United States with a critical military or intelligence advantage, the U.S. government does not want to inadvertently control items on the ITAR that are in normal commercial use. Items that would be controlled on the USML in this proposed rule have been identified as possessing parameters or characteristics that provide a critical

military or intelligence advantage. The public is thus asked to provide specific examples of items, if any, that would be controlled by the revised USML Category XII that are now in normal commercial use. The examples should demonstrate actual commercial use, not just potential or theoretical use, with supporting documents, as well as foreign availability of such items.

5) For any criteria the public believes control items in normal commercial use, the public is asked to identify parameters or characteristics that cover items exclusively or primarily in military use.

6) For any criteria the public believes control items in normal commercial use, the public is asked to identify the multilateral controls (such as the Wassenaar Arrangement's Dual Use List), if any, for such items, and the consequences of such items being controlled on the USML.

7) DDTC seeks public comments on each paragraph of the proposed USML Category XII. In addition, DDTC specifically seeks public comments on the following concepts that are introduced in proposed USML Category XII: A) using integration of an IRFPA into a permanent encapsulated sensor assembly as a control parameter; B) using the incorporation of an IRFPA into an infrared imaging camera core as a control parameter and the definition of camera cores in the note to XII(c)(12); C) the weapon shock load control criterion in XII(c)(12)(ii); and D) proposed controls on specific technical data in XII(f).

REGULATORY ANALYSIS AND NOTICES

Administrative Procedure Act

The Department of State is of the opinion that controlling the import and export of defense articles and services is a foreign affairs function of the United States Government and that rules implementing this function are exempt from sections 553 (rulemaking) and 554 (adjudications) of the

Administrative Procedure Act (APA). Although the Department is of the opinion that this rule is exempt from the rulemaking provisions of the APA, the Department is publishing this rule with a 60-day provision for public comment and without prejudice to its determination that controlling the import and export of defense services is a foreign affairs function.

Regulatory Flexibility Act

Since this rule is exempt from the rulemaking provisions of 5 U.S.C. 553, it does not require analysis under the Regulatory Flexibility Act.

Unfunded Mandates Reform Act of 1995

This proposed amendment does not involve a mandate that will result in the expenditure by State, local, and tribal governments, in the aggregate, or by the private sector, of $100 million or more in any year and it will not significantly or uniquely affect small governments. Therefore, no actions were deemed necessary under the provisions of the Unfunded Mandates Reform Act of 1995.

Small Business Regulatory Enforcement Fairness Act of 1996

This proposed amendment has been found not to be a major rule within the meaning of the Small Business Regulatory Enforcement Fairness Act of 1996.

Executive Orders 12372 and 13132

This proposed amendment will not have substantial direct effects on the States, on the relationship between the national government and the States, or on the distribution of power and responsibilities among the various levels of government. Therefore, in accordance with Executive Order 13132, it is determined that this proposed amendment does not have sufficient federalism implications to require consultations or warrant the preparation of a federalism summary impact statement. The regulations implementing

Executive Order 12372 regarding intergovernmental consultation on Federal programs and activities do not apply to this proposed amendment.

Executive Orders 12866 and 13563

Executive Orders 13563 and 12866 direct agencies to assess costs and benefits of available regulatory alternatives and, if regulation is necessary, to select regulatory approaches that maximize net benefits (including potential economic, environmental, public health and safety effects, distributed impacts, and equity). Executive Order 13563 emphasizes the importance of quantifying both costs and benefits, of reducing costs, of harmonizing rules, and of promoting flexibility. This rule has been designated a "significant regulatory action," although not economically significant, under section 3(f) of Executive Order 12866. Accordingly, the rule has been reviewed by the Office of Management and Budget (OMB).

Executive Order 12988

The Department of State has reviewed the proposed amendment in light of Executive Order 12988 to eliminate ambiguity, minimize litigation, establish clear legal standards, and reduce burden.

Executive Order 13175

The Department of State has determined that this rulemaking will not have tribal implications, will not impose substantial direct compliance costs on Indian tribal governments, and will not preempt tribal law. Accordingly, Executive Order 13175 does not apply to this rulemaking.

Paperwork Reduction Act

Following is a listing of approved Department of State collections that will be affected by revision of the U.S. Munitions List (USML) and the Commerce Control List pursuant to the President's Export Control Reform (ECR) initiative. The list of collections and the description of the manner in

which they will be affected pertains to revision of the USML in its entirety, not only to the categories published in this rule. In accordance with the Paperwork Reduction Act, the Department of State will request comment on these collections from all interested persons at the appropriate time. In particular, the Department will seek comment on changes to licensing burden based on implementation of regulatory changes pursuant to ECR, and on projected changes based on continued implementation of regulatory changes pursuant to ECR. The information collections are as follows:

1) Statement of Registration, DS-2032, OMB No. 1405-0002. The Department estimates that between 3,000 and 5,000 of the currently-registered persons will not need to maintain registration following full revision of the USML. This would result in a burden reduction of between 6,000 and 10,000 hours annually, based on a revised time burden of two hours to complete a Statement of Registration.

2) Application/License for Permanent Export of Unclassified Defense Articles and Related Unclassified Technical Data, DSP-5, OMB No. 1405-0003. The Department estimates that there will be 35,000 fewer DSP-5 submissions annually following full revision of the USML. This would result in a burden reduction of 35,000 hours annually.

3) Application/License for Temporary Import of Unclassified Defense Articles, DSP-61, OMB No. 1405-0013. The Department estimates that there will be 200 fewer DSP-61 submissions annually following full revision of the USML. This would result in a burden reduction of 100 hours annually.

4) Application/License for Temporary Export of Unclassified Defense Articles, DSP-73, OMB No. 1405-0023. The Department estimates that there will be 800 fewer DSP-73 submissions annually following full revision of the USML. This would result in a burden reduction of 800 hours annually.

5) Application for Amendment to License for Export or Import of Classified or Unclassified Defense Articles and Related Technical Data, DSP-6, -62, -74, -119, OMB No. 1405-0092. The Department estimates that there will be 2,000 fewer amendment submissions annually following full revision of the USML. This would result in a burden reduction of 1,000 hours annually.
6) Request for Approval of Manufacturing License Agreements, Technical Assistance Agreements, and Other Agreements, DSP-5, OMB No. 1405-0093. The Department estimates that there will be 1,000 fewer agreement submissions annually following full revision of the USML. This would result in a burden reduction of 2,000 hours annually.
7) Maintenance of Records by Registrants, OMB No. 1405-0111. The requirement to actively maintain records pursuant to provisions of the ITAR will decline commensurate with the drop in the number of persons who will be required to register with the Department pursuant to the ITAR. As stated above, the Department estimates that up to 5,000 of the currently-registered persons will not need to maintain registration following full revision of the USML. This would result in a burden reduction of 100,000 hours annually. However, the ITAR does provide for the maintenance of records for a period of five years. Therefore, persons newly relieved of the requirement to register with the Department may still be required to maintain records.

List of Subjects in Part 121

Arms and munitions, Exports

Accordingly, for the reasons set forth above, Title 22, Chapter I, Subchapter M, part 121 is proposed to be amended as follows:

PART 121 – THE UNITED STATES MUNITIONS LIST

1. The authority citation for part 121 continues to read as follows:

Authority: Secs. 2, 38, and 71, Pub. L. 90–629, 90 Stat. 744 (22 U.S.C. 2752, 2778, 2797); 22 U.S.C. 2651a; Pub. L. 105–261, 112 Stat. 1920; Section 1261, Pub. L. 112-239; E.O. 13637, 78 FR 16129.

2. Section 121.1 is amended by reserving paragraph (e) in U.S. Munitions List Category VIII.

3. Section 121.1 is amended by revising U.S. Munitions List Category XII to read as follows:

§121.1 The United States Munitions List.

* * * * *

Category XII — Fire Control, Range Finder, Optical and Guidance and Control Equipment

*(a) Fire control, weapons sights, aiming, and imaging systems and equipment, as follows:

(1) Fire control systems or equipment, and specially designed parts and components therefor;

(2) Weapon sights, weapon aiming systems or equipment, and weapon imaging systems or equipment (e.g., clip-on), with or without an integrated viewer, display, or reticle, and incorporating or specially designed to incorporate any of the following:

(i) An infrared focal plane array having a peak response at a wavelength exceeding 1,000 nm;

(ii) An article subject to this subchapter; or

(iii) A ballistic computer for adjusting the aim point display;

(3) Electronic or optical weapon positioning, laying, or spotting systems or equipment;

Comment [2]: Insert specially designed due to lack of military parameters to identify civilian systems used in varmit hunting for farmers and cattle ranchers or law enforcement entities. Sagem is supplying US military with clip-on devices. See attachment Maxtech1. Foreign availability of items treated as dual use - See attachments: TWS-3100, PL76416

(4) Laser spot trackers or laser spot detection, location or imaging systems or equipment, with an operational wavelength shorter than 400 nm or longer than 710 nm, and a detection range greater than 300 m;

Note to paragraph (a)(4): For controls on LIDAR, see paragraph (b)(9) of this category.

(5) Bomb sights or bombing computers;

(6) Electro-optical missile or ordnance tracking systems or equipment, or electro-optical ordnance guidance systems or equipment;

(7) Electro-optical systems or equipment that automatically detect and locate weapons launch or fire;

(8) Remote wind-sensing systems or equipment specially designed for ballistic-corrected aiming, and specially designed parts and components therefor;

(9) Helmet mounted display (HMD) systems or equipment, incorporating optical sights or slewing devices, which include the ability to aim, launch, track, or manage munitions, or control infrared imaging systems or equipment, other than such items controlled in Category VIII, (e.g., Combat Vehicle Crew HMD, Mounted Warrior HMD, Integrated Helmet Assembly Subsystem, Drivers Head Tracked Vision System).

*(b) Lasers, and laser systems and equipment, as follows:

(1) Laser target designators or coded target markers;

(2) Aiming or target illumination systems or equipment having a laser output wavelength exceeding 710 nm;

(3) Laser rangefinders having any of the following:

(i) Q-switched laser pulse; or

(ii) Laser output wavelength exceeding 1,000 nm;

Comment [JD3]: Q-switch lasers have several civilian applications and therefore is not an appropriate parameter for defining a military item. For example: ophthalmic surgery http://goochandhousego.com/product-categories/lithium-niobate-q-switches/

(4) Targeting or target location systems or equipment incorporating or specially designed to incorporate a laser rangefinder controlled in paragraph (b)(3) of this category, and incorporating or specially designed to incorporate a Global Navigation Satellite System (GNSS), guidance or navigation article controlled in paragraph (d) of this category (MT if designed or modified for rockets, missiles, SLVs, drones, or unmanned aerial vehicle systems capable of delivering at least a 500 kg payload to a range of at least 300 km range);

(5) Systems or equipment that use laser energy with an output wavelength exceeding 710 nm to exploit differential target-background retroreflectance in order to detect personnel or optical / electro-optical equipment (e.g., optical augmentation systems);

(6) Light detection and ranging (LIDAR), laser detection and ranging (LADAR), or range-gated systems or equipment, incorporating or specially designed to incorporate an article controlled in this subchapter (MT if designed or modified for rockets, missiles, SLVs, drones, or unmanned aerial vehicle systems capable of delivering at least a 500 kg payload to a range of at least 300 km);

Note to paragraph (b)(6): This paragraph does not control LIDAR systems or equipment for civil automotive applications having a range limited to 200 m or less.

(7) Synthetic aperture LIDAR or LADAR systems or equipment, having a stand-off range of 100 m or greater (MT if designed or modified for rockets, missiles, SLVs, drones, or unmanned aerial vehicle systems capable of delivering at least a 500 kg payload to a range of at least 300 km);

(8) LIDAR, LADAR, or other laser range-gated systems or equipment, as follows (MT if designed or modified for rockets, missiles, SLVs, drones, or

Comment [4]: Insert specially designed due to lack of military parameters. Captures civilian LADAR systems.

Comment [5]: BOSCH makes systems for automotive applications that exceed this limit. See attachment BOSCH. 200 m seems arbitrary given that the BOSCH system detects at farther range.

Comment [6]: Insert specially designed due to lack of military parameters. 100 m seems to overlap with (6) above.

Comment [7]: Insert Specially designed due to lack of military parameters. Capture civil systems and overlap with (6) and (7). See attachments Vision Map_A3; Optech_CS-15000 Digital Camera; Microsoft_UltraCAM, Leica_ ADS80, KSI_OSDCAM, Intergraph_DMCII250

unmanned aerial vehicle systems capable of delivering at least a 500 kg payload to a range of at least 300 km):

(i) Systems or equipment having a resolution (i.e., ground point spacing) of 0.2 m or less (better) from an altitude above ground level of greater than 16,500 ft, and incorporating or specially designed to incorporate a gimbal-mounted transmitter or beam director, and specially designed parts and components therefor;

(ii) Aircraft systems or equipment having a laser output wavelength exceeding 1,000 nm and a detection range exceeding 500 m for an obstacle with a diameter or width less than or equal to 10 mm (e.g., wire, power line);

(iii) Systems or equipment having an electrical bandwidth of 100 MHz or greater, and incorporating or specially designed to incorporate either a Geiger-mode detector array having at least 32 elements or a linear-mode detector array having at least 128 elements;

(iv) Systems or equipment employing coherent heterodyne or coherent homodyne detection techniques, having an angular resolution of less (better) than 100 microradians and an operational carrier noise ratio (CNR) less than 10;

(v) Systems or equipment that automatically classify or identify submersibles, mines, unexploded ordnance or improvised explosive devices (IEDs); or

(vi) Systems or equipment specially designed for obstacle avoidance or autonomous navigation in ground vehicles controlled in Category VII;

(9) Lasers operating at a wavelength exceeding 3,000 nm that provide a modulated output for systems or equipment controlled in Category XI(a)(4);

(10) Tunable semiconductor lasers having an output wavelength exceeding 1,400 nm and an output power greater than 1 W;

(11) Non-tunable single transverse mode semiconductor lasers having an output wavelength exceeding 1,510 nm and either an average output power or continuous wave (CW) output power greater than 2 W;

(12) Non-tunable multiple transverse mode semiconductor lasers having an output wavelength exceeding 1,900 nm and either an average output power or CW output power greater than 2 W;

(13) Laser stacked arrays as follows:

Comment [JD8]: Laser stacked arrays are undefined

(i) Having an output wavelength not exceeding 1,400 nm and a peak pulsed power density greater than 3,300 W/cm^2;

(ii) Having an output wavelength exceeding 1,400 nm but less than 1,900 nm and a peak pulsed power density greater than 700 W/cm^2;

(iii) Having an output wavelength exceeding 1,900 nm and a peak pulsed power density greater than 70 W/cm^2; or

(iv) Having an output wavelength exceeding 1,900 nm, and either an average output power or CW output power greater than 20W;

(14) Developmental lasers and laser systems or equipment funded by the Department of Defense;

Comment [9]: See comments in base comment letter regarding "developmental" language;

Note 1 to paragraph (b)(14): This paragraph does not control developmental lasers and laser systems or equipment (a) in production, (b) determined to be subject to the EAR via a commodity jurisdiction determination (see § 120.4 of this subchapter), or (c) identified in the relevant Department of Defense contract or other funding authorization as being developed for both civil and military applications.

Note 2 to paragraph (b)(14): Note 1 does not apply to defense articles enumerated on the U.S. Munitions List, whether in production or development.

Note 3 to paragraph (b)(14): This provision is applicable to those contracts or other funding authorizations that are dated XXXX, 2016, or later.

Note to paragraphs (b)(4) and (b)(6) - (8): "Payload" is the total mass that can be carried or delivered by the specified rocket, missile, SLV, drone or unmanned aerial vehicle that is not used to maintain flight. For definition of "range" as it pertains to rocket systems, see note 1 to paragraph (a) of USML Category IV. For definition of "range" as it pertains to aircraft systems, see note to paragraph (a) of USML Category VIII.

*(c) Infrared focal plane arrays, image intensifier tubes, night vision, electro-optic, infrared and terahertz systems, equipment and accessories, including cameras and cores, as follows:

(1) Image intensifier tubes (IITs) having a peak response within the wavelength range exceeding 400 nm but not exceeding 2,050 nm and incorporating either a microchannel plate described in paragraph (e)(2)(i) or electron sensing device described in paragraph (e)(2)(iv), as follows, and specially designed parts and components therefor:

(i) Incorporating a multialkali photocathode having a luminous sensitivity exceeding 500 microamps per lumen (e.g., GEN 2 IITs);

(ii) Incorporating a compound semiconductor photocathode having a radiant sensitivity exceeding 20 mA/W (e.g., GEN 3 IITs);

(2) Photon detector, microbolometer detector, or multispectral detector infrared focal plane arrays (IRFPAs) having a peak response within the wavelength range exceeding 900 nm but not exceeding 30,000 nm and not integrated into a permanent encapsulated sensor assembly, and detector elements therefor;

Note 1 to paragraph (c)(2): This paragraph does not control lead sulfide or lead selenide IRFPAs having a peak response within the wavelength range

Comment [10]: Insert specially designed as there is a lack of military parameters. The parameters provided are general (wavelength) and parameters are too low (500 microamps per lumen)

Comment [11]: Generation 2 image intensifier tubes are produced only outside of the US and used in civil applications. See attachment XD4_a , russian I2 tube, Russian i2

Comment [12]: Insert specially designed as there is a lack of military parameters. Are items captured in c(3) caught here as well?. What is the necessity of parsing FPAs using permanent. Other countries make all of these FPAs and do not add this burden. Permanent is subject to interpretation and could cause Commodity Jurisdiction submissions as a manufacturer may know how to remove a component while a user may not.

exceeding 1,000 nm but not exceeding 5,000 nm and not exceeding 16 detector elements, or pyrolectric IRFPAs with detectors composed of any of the following or their variants: triglycine sulphate, lead-lanthanum-zirconium titanate, lithium tantalite, polyvinylidene fluoride, or strontium barium niobate.

Note 2 to paragraph (c)(2): For controls on readout integrated circuits (ROICs), see paragraphs (e)(4) and (e)(5).

(3) One-dimensional photon detector IRFPAs described in paragraph (c)(2) in a permanent encapsulated sensor assembly, having greater than 640 detector elements;

(4) Two-dimensional photon detector IRFPAs described in paragraph (c)(2) in a permanent encapsulated sensor assembly, having greater than 256 detector elements;

(5) Microbolometer IRFPAs described in paragraph (c)(2) in a permanent encapsulated sensor assembly, having greater than 328,000 detector elements;

(6) Multispectral IRFPAs in a permanent encapsulated sensor assembly, having a peak response in any spectral band within the wavelength range exceeding 1,500 nm but not exceeding 30,000 nm;

(7) Charge multiplication focal plane arrays having greater than 1,600 elements in any dimension and having a maximum radiant sensitivity exceeding 50 mA/W for any wavelength exceeding 760 nm but not exceeding 900 nm, and avalanche detector elements therefor;

(8) Charge multiplication focal plane arrays described in paragraph (c)(7) in a permanent encapsulated sensor assembly, and avalanche detector elements therefor;

Comment [13]: Roll back of existing CCL language (6A002.a.3.d.2.1) which states that linear arrays with a rectangular aspect ratio are not controlled.

Comment [14]: Insert specially designed due to lack of military parameters. Captures civil products in production. See attachment Hamamatsu Sensor and Camera_a; XENICS_a

Comment [15]: Insert specially designed due to lack of military parameters and low value (256). Captures civil items in production. See attachment XENICS_b; Cardinal 640; wdr

Comment [16]: Insert specially designed due to lack of military parameters and low value (328,000) which moves rapidly in the commercial market. Captures items in commercial production. See attachment sULIS_a; Bird-XGA

Comment [17]: Insert specially designed due to lack of military parameters.

Comment [18]: Insert specially designed due to lack of military parameters and low value. Does this meet the parameters – why should any EMCCD be USML since e2v is in UK and treats as a dual use item. Captures items in commercial production. See EMCCD_Synapse_01

Comment [19]: Insert specially designed due to lack of military parameters.

(9) Integrated IRFPA dewar cooler assemblies (IDCAs), with or without an IRFPA, having any of the following:

(i) Cryocoolers having a cooling source temperature below 218 K and a mean-time-to-failure (MTTF) in excess of 3000 hours;

(ii) Active cold fingers;

(iii) Variable or dual aperture mechanisms; or

(iv) Dewars specially designed for articles controlled in paragraphs (a), (b), or (c) of this category;

(10) Gimbals with two or more axes of active stabilization having a minimum root-mean-square (RMS) stabilization better (less) than 200 microradians, and specially designed for articles controlled in this subchapter;

(11) Gimbals with two or more axes of active stabilization having a minimum root-mean-square (RMS) stabilization better (less) than 100 microradians;

Note to paragraph (c)(11): This paragraph does not control gimbals containing only a non-removable camera payload operating exclusively in the visible spectrum (i.e., 400 nm to 760 nm).

(12) Infrared imaging camera cores (e.g., modules, engines, kits), and specially designed electronics and optics therefor, having any of the following:

(i) An image intensifier tube described in paragraph (c)(1);

(ii) Output imagery when subject to more than 20 weapon shock load events of 325 g for 0.4 ms and a microbolometer IRFPA having greater than 111,000 detector elements;

Comment [20]: Insert specially designed due to lack of military parameters. Captures items in commercial production. See attachments SELEX2, Blackbird

Comment [21]: Foreign availability of much higher performance and treated as dual use: See attachment AIM_SX095, Tehnika

Comment [22]: Insert specially designed due to a lack of military parameters. Seems to overlap with C(11).

Comment [23]: Insert specially designed due to lack of military parameters. Captures items in normal commercial use. See attachments: uavvision, xenicsgimbal
Don't think it is necessary to identify 2 different gimbal controls.

Comment [24]: Insert specially designed due to lack of military parameters. Captures items in normal commercial use described in subparagraph comments.

Comment [25]: 20 weapon shock load events are not tested for commercial products and are not found on spec sheets. Creates unlevel playing field for US manufacturers. See XENICS LWIR_modules_a does this meet this parameter ? Confusing. Why is shock not associated with non-microbolometer IRFPA modules or I2 tube modules ?; See attachment GWIR UFPAs

(iii) A microbolometer IRFPA described in paragraph (c)(2) having greater than 328,000 detector elements, or a microbolometer IRFPA described in paragraph (c)(5);

(iv) An IDCA described in paragraph (c)(9), or IDCA parts or components s described in paragraph (e)(7);

(v) A one-dimensional photon detector IRFPA described in paragraph (c)(2) and having a peak response within the wavelength range exceeding 900 nm but not exceeding 2,500 nm and greater than 640 detector elements;

(vi) A one-dimensional or two-dimensional photon detector IRFPA described in paragraph (c)(2) having a peak response within the wavelength range exceeding 2,500 nm but not exceeding 30,000 nm and greater than 256 detector elements;

(vii) A one-dimensional photon detector IRFPA described in paragraph (c)(3);

(viii) A two-dimensional photon detector IRFPA described in paragraph (c)(2) or (c)(4) having a peak response within the wavelength range exceeding 900 nm but not exceeding 2,500 nm, and greater than 111,000 detector elements;

(ix) A two-dimensional photon detector IRFPA described in paragraph (c)(4) having a peak response within the wavelength range exceeding 2,500 nm but not exceeding 30,000 nm;

(x) A multispectral infrared focal plane array described in paragraph (c)(2) or (c)(6); or

(xi) A charge multiplication IRFPA controlled in paragraph (c)(7) or (c)(8);

Note to paragraph (c)(12): The articles controlled by this paragraph have sufficient electronics to enable as a minimum the output of an analog or digital signal once power is applied.

Comment [26]: Captures item in normal commercial use and treated by France as dual use. See attachment Atom1024; microcam

Comment [27]: Item in normal commercial use and treated as dual use. See attachment Hamamatsu Sensor and Camera_a (G10768 series). 1D technology has been replaced by 2D fpas. No justification for old technology to be considered "crown jewels" especially when it is produced abroad.

Comment [28]: See attachment Hercules-MWIR

Comment [29]: 1D technology has been replaced by 2D fpas. No justification for old technology to be considered "crown jewel" especially when it is produced abroad. See attachment lynx-1.7-2048

Comment [30]: Foreign product in normal commercial use and treated abroad as dual use. See attachment U&U

Comment [31]: Foreign item in normal commercial use. See attachment cougar640

Comment [32]: See attachment XENICS xsw-640_module_a, NIT module_a

Comment [33]: See attachment Hercules-MWIR

Comment [34]: See attachment XENICS xsw-640_module_a, NIT module_a

Comment [35]: Foreign sources market claiming ITAR free. See attachment xco-640_modules, xco-640_ modules1; UofR

Comment [36]: See attachment NEO_HySpex, SASI-600v2, A3_Dual

(13) Binoculars, bioculars, monoculars, goggles, or head or helmet-mounted imaging systems or equipment (including video-based articles having a separate near-to-eye display) that incorporate or are specially designed to incorporate any of the following, and specially designed electronics, optics, and displays therefor:

(i) An IIT controlled in this category; or

(ii) An infrared imaging camera core controlled in paragraph (c)(12)(i)-(xi);

Note to paragraph (c)(13): The articles controlled in this paragraph include binoculars, bioculars, monoculars, goggles, or head- or helmet-mounted imaging systems or equipment (including video-based articles having a separate near-to-eye display) that incorporate or are specially designed to incorporate an IRFPA or IIT article (e.g., IDCA, IRFPA assembly) and electronics separately.

(14) Targeting systems or equipment incorporating or specially designed to incorporate an article controlled in this category (e.g., pods, IBAS, SGFLIR, gunner TIS), and specially designed parts and components therefor;

(15) Infrared search and track (IRST) systems or equipment that incorporate or are specially designed to incorporate an article controlled in this category, and maintain positional or angular state of a target through time, and specially designed parts and components therefor;

(16) Infrared imaging systems or equipment (e.g., fully packaged cameras) incorporating or specially designed to incorporate an article controlled in this category, as follows, and specially designed electronics, optics, and displays therefor:

(i) Having two or more axes of active stabilization and a minimum root-mean-square (RMS) stabilization better (less) than 200 microradians;

Comment [37]: Insert specially designed due to lack of military parameters. Captures items in normal commercial use. See attachment 2012 Guide-IR, Russian i2

Comment [38]: Seeks to undo carve out which allowed for military I2 tubes when part of a commercial system would permit the system to be licensed as CCL; See attachment PI-MAX

Comment [39]: Would the UK ticam be caught ? Claims no ITAR license required.

Comment [40]: Insert specially designed as there are no military parameters being provided.

Comment [41]: Insert specially designed as there are no military parameters being specified and it captures commercial items in production. See attachment Selex

Comment [42]: Insert specially designed as there are no military parameters being provided and it captures commercially available products in production. See attachments A3_Dual, SASI-600v2, NEO_HySpex

(ii) Mobile reconnaissance, scout, or surveillance systems or equipment providing real-time target location at ranges greater than 5 km (e.g., LRAS, CIV, HTI, SeeSpot, MMS);

(iii) Fixed-site reconnaissance, surveillance or perimeter security systems or equipment having greater than 640 detector elements in any dimension;

(iv) Combat vehicle, tactical wheeled vehicle, naval vessel, or aircraft pilotage systems or equipment having a variable field of view or field of regard (e.g., electronic pan or tilt), and either an IRFPA article controlled in this subchapter with greater than 640 detector elements in any dimension, or an IIT controlled in this category (e.g., DAS, DVE, SeaFLIR, PNVS);

Note to paragraph (c)(16)(iv): This paragraph does not control distributed aperture sensors specially designed for civil automotive lane departure warning or collision avoidance.

(v) Multispectral imaging systems or equipment that either incorporate a multispectral IRFPA described in paragraph (c)(2) or (c)(6), or classify or identify military or intelligence targets or characteristics;

(vi) Automated missile detection or warning;

(vii) Hardened to withstand electromagnetic pulse (EMP) or chemical, biological, or radiological threats;

(viii) Incorporating mechanism(s) to reduce signature; or

(ix) Specially designed for military platforms controlled in Categories VI, VII or VIII (MT if designed or modified for unmanned aerial vehicle systems capable of delivering at least a 500 kg payload to a range of at least 300 km);

(17) Terahertz imaging systems or equipment having a peak response in the frequency range exceeding 30 GHz but not exceeding 3000 GHz and having a resolution less (better) than 0.5 milliradians at a standoff range of 100 m;

Comment [43]: See attachment VarioCAM_HD_a ;

Comment [44]: Insert specially designed a there are no military parameters provided and appears to catch items that are in production and being sold commercially. See attachment Multispectral

Comment [45]: Insert specially designed as there are no military parameters provided and appears to catch items that are being sold commercially. See AMPS_Airborne Missile Protection System

Comment [46]: Insert specially designed as this may capture commercially available items for search and rescue.

(18) Near-to-eye display systems or equipment, specially designed for articles controlled in this subchapter;

(19) Systems or equipment that project radiometrically calibrated scenes directly into the entrance aperture of an electro-optical or infrared (EO/IR) sensor controlled in this subchapter within either the spectral band exceeding 10 nm but not exceeding 400 nm, or the spectral band exceeding 900 nm but not exceeding 30,000 nm; or

(20) Systems or equipment incorporating an infrared (IR) beacon or emitter specially designed for Identification Friend or Foe (IFF), and specially designed parts and components therefor;

(21) Developmental imaging systems or equipment funded by the Department of Defense.

Note 1 to paragraph (c)(21): This paragraph does not control imaging systems or equipment (a) in production; (b) determined to be subject to the EAR via a commodity jurisdiction determination (see §120.4 of this subchapter), or (c) identified in the relevant Department of Defense contract or other funding authorization as being developed for both civil and military applications.

Note 2 to paragraph (c)(21): Note 1 does not apply to defense articles enumerated on the U.S. Munitions List, whether in production or development.

Note 3 to paragraph (c)(21): This provision is applicable to those contracts or other funding authorizations that are dated XXXX, 2016, or later.

Note to paragraph (c): A permanent encapsulated sensor assembly (e.g., sealed enclosure, vacuum package) prevents direct access to the IRFPA, disassembly of the sensor assembly, and removal of the IRFPA without destruction or damage to the IRFPA.

Comment [47]: Isn't this captured in e(12) ?

Comment [48]: Insert specially designed as this appears to capture items in commercial production. See attachment CI Systems Test Station FLIR, CI Systems Test Station, CI Systems SWIR Test Station

Comment [49]: There are a number of programs that DoD funds that are intended to be commercial to lower the cost of military derivatives.

Note to paragraphs (c)(1)- (c)(5), (c)(7), (c)(8), and (c)(12) other than (c)(12)(ix) having greater than 640 detector elements in any dimension, and (c)(12)(x): The articles described in these paragraphs are subject to the EAR when, prior to export, reexport, retransfer, or temporary import, they are integrated into and included as an integral part of an item subject to the EAR, and cannot be removed without destruction or damage to the article or render the item inoperable. Articles are not subject to the EAR until integrated into the item subject to the EAR. Defense articles intended to be integrated, and technical data and defense services directly related thereto remain subject to the ITAR prior to integration. See paragraph (f) of this Category for enumerated technical data and software, and specific information subject to the EAR.

(d) Guidance, navigation, and control systems and equipment as follows:

(1) Guidance or navigation systems (e.g., inertial navigation systems, inertial measurement units, inertial reference units, attitude and heading reference systems) as follows (MT if designed or modified for rockets, missiles, SLVs, drones, or unmanned aerial vehicle systems capable of a range greater than or equal to 300 km);

(i) Having a circle of equal probability (CEP) of position error rate less (better) than 0.35 nautical miles per hour;

(ii) Having a heading error or true north determination of less (better) than 0.50 mrad secant (latitude) (0.02865 degrees secant (latitude)); or

(iii) Specified to function at linear acceleration levels exceeding 25 g;

Note to (d)(1): For aircraft and unmanned aerial vehicle guidance or navigation systems, see Category VIII(e). For rocket or missile flight control and guidance systems (including guidance sets), see Category IV(h).

(2) Accelerometers having a bias stability of less (better) than 20 μg, a scale factor stability of less (better) than 20 parts per million, or capable of measuring greater than 100,000 g (MT if having a scale factor repeatability less (better) than 1250 ppm and bias repeatability less (better) than 1250 micro g or specified to function at acceleration levels greater than 100 g);

Note 1 to paragraph (d)(2): For weapon fuze accelerometers, see Category III(d) or IV(h).

Note 2 to paragraph (d)(2): MT designation does not include accelerometers that are designed to measure vibration or shock.

(3) Gyroscopes or angular rate sensors having an angle random walk of less (better) than 0.00125 degree per square root hour or having a bias stability less (better) than 0.0015 degrees per hour (MT if having a rated drift stability of less than 0.5 degrees (1 sigma or rms) per hour in a 1 g environment or specified to function at acceleration levels greater than 100 g);

(4) Mobile relative gravimeters, having automatic motion compensation, with an in-service accuracy of less (better) than 0.4 mGal (MT if designed or modified for airborne or marine use and having a time to steady-state registration of two minutes or less);

(5) Mobile gravity gradiometers having an accuracy of less (better) than 10 Eötvös squared per radian per second for any component of the gravity gradient tensor, and having a spatial gravity wavelength resolution of 50 m or less (MT if designed or modified for airborne or marine use);

Note to paragraph (d)(5): "Eötvös" is a unit of acceleration divided by distance that was used in conjunction with the older centimeter-gram-second system of units. The Eötvös is defined as 1/1,000,000,000 Galileo (Gal) per centimeter.

(6) Global Navigation Satellite System (GNSS) receiving equipment, as follows, and specially designed parts and components therefor:
(i) Global Navigation Satellite System (GNSS) receiving equipment specially designed for military applications (MT if designed or modified for airborne applications and capable of providing navigation information at speeds in excess of 600 m/s);
(ii) Global Positioning System (GPS) receiving equipment specially designed for encryption or decryption (e.g., Y-Code, M-Code) of GPS precise positioning service (PPS) signals (MT if designed or modified for airborne applications);
(iii) GPS receiving equipment specially designed for use with a null steering antenna, an electronically steerable antenna, or including a null steering antenna designed to reduce or avoid jamming signals (MT if designed or modified for airborne applications); or
Note to paragraph (6)(iii): The articles described in this paragraph are subject to the EAR when, prior to export, reexport, retransfer, or temporary import, they are integrated into and included as an integral part of an item subject to the EAR. Articles do not become subject to the EAR until integrated into the item subject to the EAR. Export, reexport, retransfer, or temporary import of, and technical data and defense services directly related to, defense articles intended to be integrated, remain subject to the ITAR.
(iv) GPS receiving equipment specially designed for use with rockets, missiles, space launch vehicles (SLVs), drones, or unmanned air vehicle systems capable of delivering at least a 500 kg payload to a range of at least 300 km (MT);
Note to paragraph (6)(iv): "Payload" is the total mass that can be carried or delivered by the specified rocket, missile, SLV, drone or unmanned aerial

vehicle that is not used to maintain flight**.** For definition of "range" as it pertains to rocket systems, see note 1 to paragraph (a) of USML Category IV. For definition of "range" as it pertains to aircraft systems, see note to paragraph (a) of USML Category VIII.

(7) GNSS anti-jam systems employing adaptive antennas that have a minimum of four antenna elements, add 35 dB or greater anti-jam margin, and produce nulls in the direction of jammers or high-gain beams in the direction of satellites at any ranging code frequency;

(8) GNSS security devices (e.g., Selective Availability Anti-Spoofing Modules, Security Modules, and Auxiliary Output Chips), Selective Availability Anti-Spoofing Module (SAASM), Security Module (SM) and Auxiliary Output Chip (AOC) chips; or

(9) Developmental guidance, navigation, or control devices, systems or equipment funded by the Department of Defense (MT if designed or modified for rockets, missiles, SLVs, drones, or unmanned aerial vehicle systems capable of a range equal to or greater than 300 km);

Note 1 to paragraph (d)(9): This paragraph does not control guidance, navigation, or control, systems, or equipment (a) in production, (b) determined to be subject to the EAR via a commodity jurisdiction determination (see § 120.4 of this subchapter), or (c) identified in the relevant Department of Defense contract or other funding authorization as being developed for both civil and military applications.

Note 2 to paragraph (d)(9): Note 1 does not apply to defense articles enumerated on the U.S. Munitions List, whether in production or development.

Note 3 to paragraph (d)(9): This provision is applicable to those contracts or other funding authorizations that are dated XXXX, 2016, or later.

Note 4 to paragraph (d)(9): For definition of "range" as it pertains to rocket systems, see note 1 to paragraph (a) of USML Category IV. For definition of "range" as it pertains to aircraft systems, see note to paragraph (a) of USML Category VIII.

(e) Parts, components, accessories, attachments, and associated equipment as follows:

(1) Optical sensors having a spectral filter for systems or equipment controlled in Category XI(a)(4), or optical sensor assemblies that provide threat warning or tracking for systems or equipment controlled in Category XI(a)(4) and specially designed optics and electronics therefor;

(2) Image intensifier tube (IIT) parts and components as follows:

(i) Microchannel plates having a hole pitch (center-to-center spacing) of 12 µm or less;

(ii) Multialkali photocathodes (e.g., S-20 and S-25) having a luminous sensitivity exceeding 500 microamps per lumen;

(iii) III/V compound semiconductor (e.g., GaAs or GaInAs) photocathodes and transferred electron photocathodes having a radiant sensitivity exceeding 20 mA/W;

(iv) Electron sensing devices with detectors having a non-binned center-to-center spacing less than 100 µm, and either achieving charge multiplication within the vacuum space other than by a microchannel plate or specially designed for operation with a microchannel plate;

(v) Phosphor screens, including output faceplates, specially designed for IITs controlled in this category;

(vi) Miniature autogated power supplies providing internal sensing and control of the photocathode to increase the dynamic range of IITs controlled in this category; or

Comment [50]: Insert specially designed as there are no military parameters provided. Cannot be "crown jewel" due to foreign availability and commercial production. See attachment mcp_a

Comment [51]: Insert specially designed as this entry refers to Gen 2 technology which is not produced in the US any longer and cannot be a "crown jewel".

(vii) Fiber-optic inverters, couplers or tapers specially designed for IITs controlled in this category;

(3) Wafers incorporating structures for either a ROIC controlled in paragraph (e)(4) or (e)(5), or an IRFPA or detector elements therefor controlled in paragraph (c)(2);

(4) Read-Out Integrated Circuits (ROICs) specially designed for an IRFPA controlled in paragraph (c)(2) or detector elements therefor, as follows:

(i) one-dimensional photon detector IRFPA having greater than 640 detector elements;

(ii) two-dimensional photon detector IRFPA having greater than 256 detector elements;

(iii) a microbolometer IRFPA having greater than 19,200 elements; or

(iv) multispectral IRFPA;

Note to paragraph (e)(4): ROICs are specially designed for an infrared focal plane array detector even if the detector is incorporated into an item that is not enumerated on the U.S. Munitions List.

(5) ROICs specially designed for a camera/core/packaged IRFPA subject to the controls of this Subchapter;

(6) Vacuum packages or other sealed enclosures for an IRFPA or IIT controlled in paragraph (c) of this category specially designed for incorporation or integration into an article controlled in paragraphs (a), (b), or (c) of this category;

(7) Integrated IRFPA dewar cooler assembly (IDCA) parts and components, as follows:

(i) Cryocoolers having a cooling source temperature below 218 K and a mean-time-to-failure (MTTF) in excess of 3000 hours;

(ii) Active cold fingers;

Comment [JD52]: Wafers have previously not been listed in the USML. "incorporating structures" is undefined and therefore open to interpretation.

Comment [53]: Insert specially designed in front of ROIC and remove it from IRFPA as there are no military parameters provided. Most ROICs are general purpose and can be coupled to different detector arrays or different sizes.

Comment [54]: 1D technology has been replaced by 2D. Old technology should not be considered to be "crown jewels" and removed from ITAR control entirely.

Comment [55]: See attachment NIT ROIC-2014

Comment [56]: ROICS are needed for all commercial applications. Given the lack of military equities in the uncooled market, this entry should be removed from ITAR control entirely. See Maxtech data.

Comment [57]: What does this entry capture that is not covered in e(4).

Comment [58]: Insert specially designed as there are not military parameters provided to determine when an item is a munitions.

Comment [59]: The parameters provided capture items in normal commercial use and available from foreign sources. Not crown jewels. See attachment K508_a

(iii) Variable or dual aperture mechanisms; or

(iv) Dewars specially designed for articles controlled in paragraphs (a), (b) or (c) of this category;

(8) IRFPA Joule-Thomson (JT) self-regulating cryostats specially designed for articles controlled in this subchapter;

(9) Infrared lenses, mirrors, beam splitters or combiners, filters, and treatments and coatings, specially designed for any article controlled in this category;

(10) Drive, control, signal or image processing electronics, specially designed for articles controlled in this category;

(11) Signal processing electronics, attachments or accessories that provide:

(i) Automatic or aided detection and recognition, classification, identification or discrimination of military or intelligence items;

(ii) Multi-sensor fusion other than image blending; or

(iii) Target aim point adjustment;

Note to paragraph (e)(11)(ii): Multi-sensor fusion refers to automatically combining imagery or information from two or more sensors, including at least one article controlled in this category, to improve classification, identification, or tracking of targets relative to any of the individual sensors.

(12) Near-to-eye displays specially designed for articles controlled in this category;

(13) Resonators, receivers, transmitters, modulators, gain media, and drive electronics or frequency converters specially designed for laser systems or equipment controlled in this category;

(14) Two-dimensional infrared scene projector emitter arrays (i.e., resistive arrays) that emit infrared radiation within the 900 nm to 30,000 nm wavelength range; or

Comment [60]: There are ECCNs being proposed in the companion rule (i.e. 6A615) that would overlap with this language. Why does this leave off the optical materials used in 615 as parameters? What is the need to control items available from Germany, Israel, Japan, and the PRC? Perhaps the 615 language needs to be incorporated here and deleted from the companion rule. See attachment Optec(1), Optec(2), Optec(3). Specifically infrared lenses has never been an item listed on the USML and is not a listed item on the Wassenaar munitions list. This technology is inherently dual-use and should fall under the jurisdiction of the CCL.

Comment [61]: Insert specially designed since there is no definition/parameters for military or intelligence items provided

Comment [62]: Foreign availability of capability which is treated as dual use. Note reference to no ITAR restrictions. See attachments meerkat_fusion and meerkat-fusion camera.

Comment [63]: Isn't this already captured in C(18) ?

(15) Any part, component, accessory, attachment, or associated equipment, that:

(i) is "classified";

(ii) contains "classified" software;

(iii) is manufactured using "classified" production data; or

(iv) is being developed using "classified" information.

Note to paragraph (e)(15): "Classified" means classified pursuant to Executive Order 13526, or predecessor order, and a security classification guide developed pursuant thereto or equivalent, or to the corresponding classification rules of another government.

Note to paragraph (e): The articles described in this paragraph are subject to the EAR when, prior to export, reexport, retransfer, or temporary import, they are integrated into and included as an integral part of an item subject to the EAR, and cannot be removed without destruction or damage to the article or render the item inoperable. Articles are not subject to the EAR until integrated into the item subject to the EAR. Defense articles intended to be integrated, and technical data and defense services directly related thereto, remain subject to the ITAR prior to integration. See paragraph (f) of this Category for enumerated technical data and software, and specific information subject to the EAR.

*(f) Technical data (as defined in §120.10 of this subchapter) and defense services (as defined in §120.9 of this subchapter) directly related to the defense articles enumerated in paragraphs (a) through (e) of this Category. (See §125.4 of this subchapter for exemptions.) (MT for technical data and defense services related to articles designated as such.)

Note 1 to paragraph (f): Technical data and defense services directly related to image intensifier tubes and specially designed parts and components

therefor controlled in paragraph (c)(1), infrared focal plane arrays (IRFPAs) and detector elements therefor controlled in paragraph (c)(2), integrated IRFPA dewar cooler assemblies (IDCAs) controlled in paragraph (c)(9), wafers incorporating IRFPA or ROIC structures controlled in paragraph (e)(3), and specially designed readout integrated circuits (ROICs) controlled in paragraphs (e)(4) and (e)(5), remain subject to the ITAR even if the technical data or defense services could also apply to items subject to the EAR.

Note 2 to paragraph (f): Software and technical data include:

A. Design or manufacturing process descriptions (e.g., steps, sequences, conditions, parameters) for lasers described in paragraphs (b)(6) and (b)(9)-(13), IITs controlled in paragraph (c)(1) and their parts and components controlled in paragraph (e)(2) (including tube sealing techniques, interface techniques within the vacuum space for photocathodes, microchannel plates, phosphor screens, input glass-window faceplates, input or output fiber optics (e.g., inverter)), IRFPAs and detector elements therefor controlled in paragraph (c)(2), integrated IRFPA dewar cooler assemblies (IDCAs) controlled in paragraph (c)(9),wafers incorporating structures for an IRFPA and detector elements therefor controlled in paragraph (c)(2) or structures for ROICs controlled in paragraph (e)(4) or (e)(5), and specially designed ROICs controlled in paragraphs (e)(4) and (e)(5) (including bonding or mating (e.g., hybridization of IRFPA detectors and ROICs), prediction or optimization of IRFPAs or ROICs at cryogenic temperatures, junction formation, passivation).

Note to paragraph A: Technical data does not include information directly related to basic operating instructions, testing results, incorporating or integrating IRFPAs into higher level packaged assemblies not enumerated in

this category, or external interface control documentation associated with such assemblies or assemblies subject to the EAR, provided such information does not include design methodology, engineering analysis, or manufacturing know-how for a USML controlled IRFPA.

B. Software that converts an article controlled in this category into an item subject to the EAR or an item subject to the EAR into an article controlled in this category is directly related to the defense article controlled in this category. When a defense article has been converted into an item subject to the EAR through software, the presence of the software that prevents the item from meeting or exceeding a USML control parameter does not make the item subject to the ITAR.

C. EO/IR simulation or projection system software that replicates via simulation either the output data or information provided by any article controlled in this category, a radiometrically calibrated spectral signature of any article controlled in this subchapter, volumetric effects of plumes or military operational obscurants, or countermeasure effects.

Note 3 to paragraph (f): Technology for incorporating or integrating IRFPAs into permanent encapsulated sensor assemblies subject to the EAR, or integrating such assemblies into an item subject to the EAR, and integrating IITs into an item subject to the EAR, including integrating items subject to the EAR into foreign military commodities outside the United States, is subject to the EAR.

(g)-(w) [Reserved]

(x) Commodities, software, and technology subject to the EAR (see §120.42 of this subchapter) used in or with defense articles controlled in this category.

Note to paragraph (x): Use of this paragraph is limited to license applications for defense articles controlled in this category where the purchase documentation includes commodities, software, or technology subject to the EAR (see §123.1(b) of this subchapter).

* * * * *

4. Section 121.1 is amended by reserving paragraph (c) in U.S. Munitions List Category XV.

(Date)	Rose E. Gottemoeller, Under Secretary, Arms Control and International Security, Department of State.

EUNIR SYSTEMS NV

Introduction

To develop and support the global sales of Guide branded Thermal Imaging cameras

Provide the very latest best of breed products

A technology leader

A professional organization

Offering unmatched levels of service and support

EUNIR SYSTEMS NV

Management

The company management team has over 18 years experience in the security industry

Over 15 years in Thermal Imaging

And over 12 years in military service

EUNIR SYSTEMS NV

Company Overview

Located in central Europe, Belgium

Able to support the EMEA region

- ✓ **Sales**
- ✓ **Marketing**
- ✓ **Training**
- ✓ **Admin**
- ✓ **Engineering**
- ✓ **Warehouse**

Financial

International business has grown to $30m 2011

Global Sales Breakdown

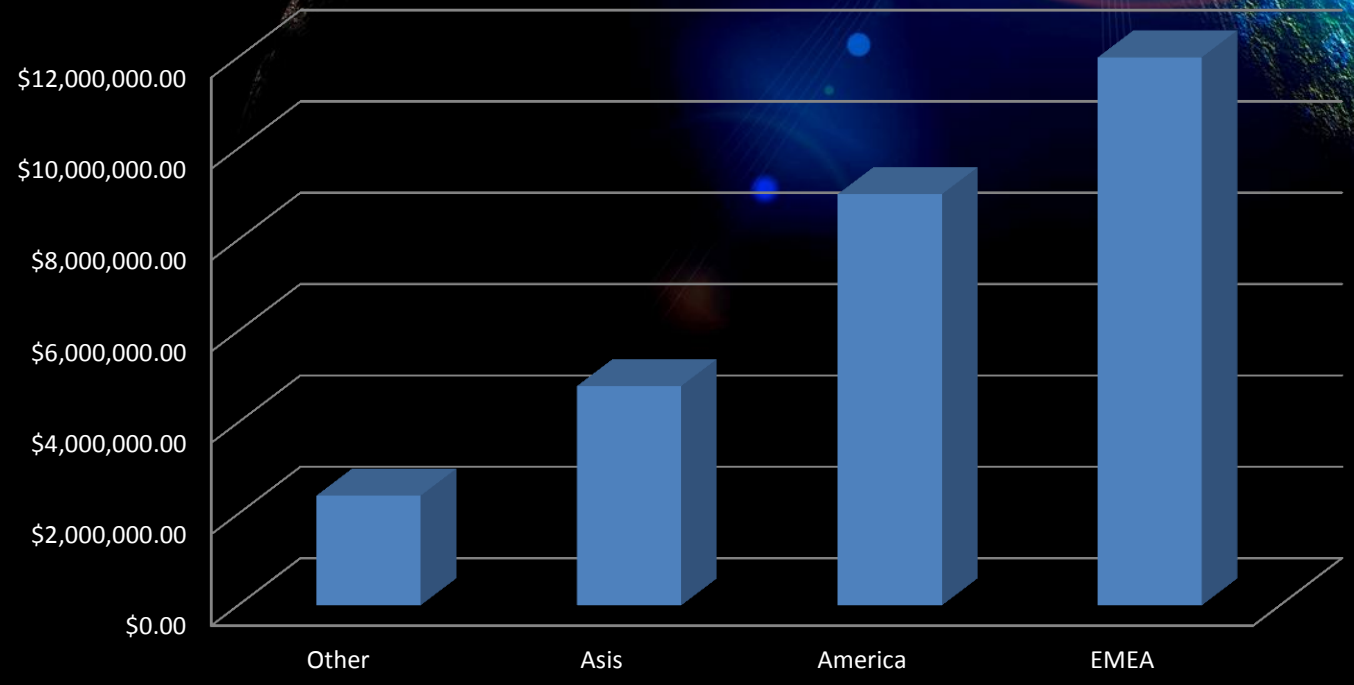

Financial

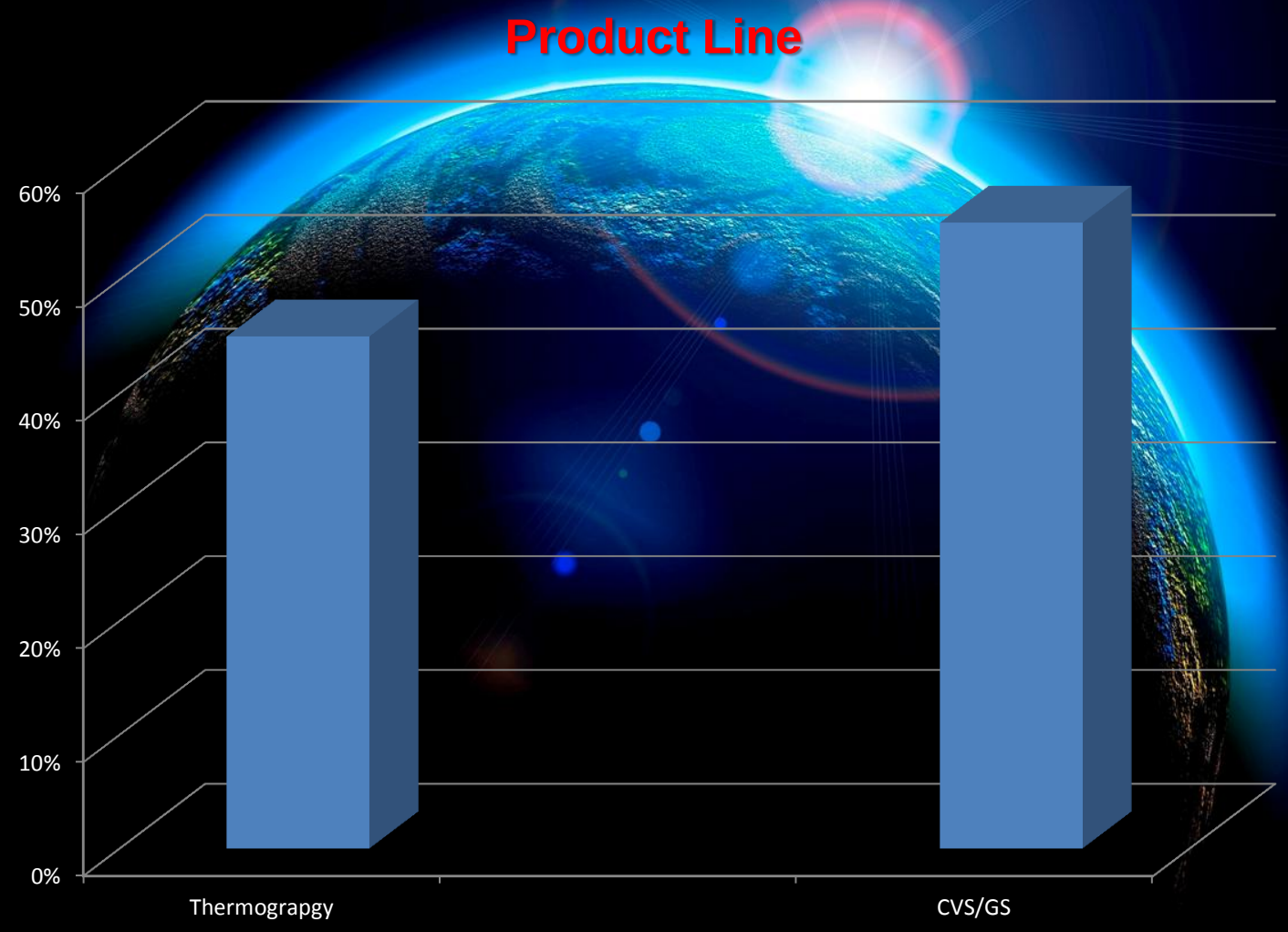

Team

Eunir can call upon a team of 14 regional managers
8 Field Application Engineers
5 Office support administrators
3 Technicians/Trainers

Managed by 2 directors

EUNIR SYSTEMS NV

Our Business

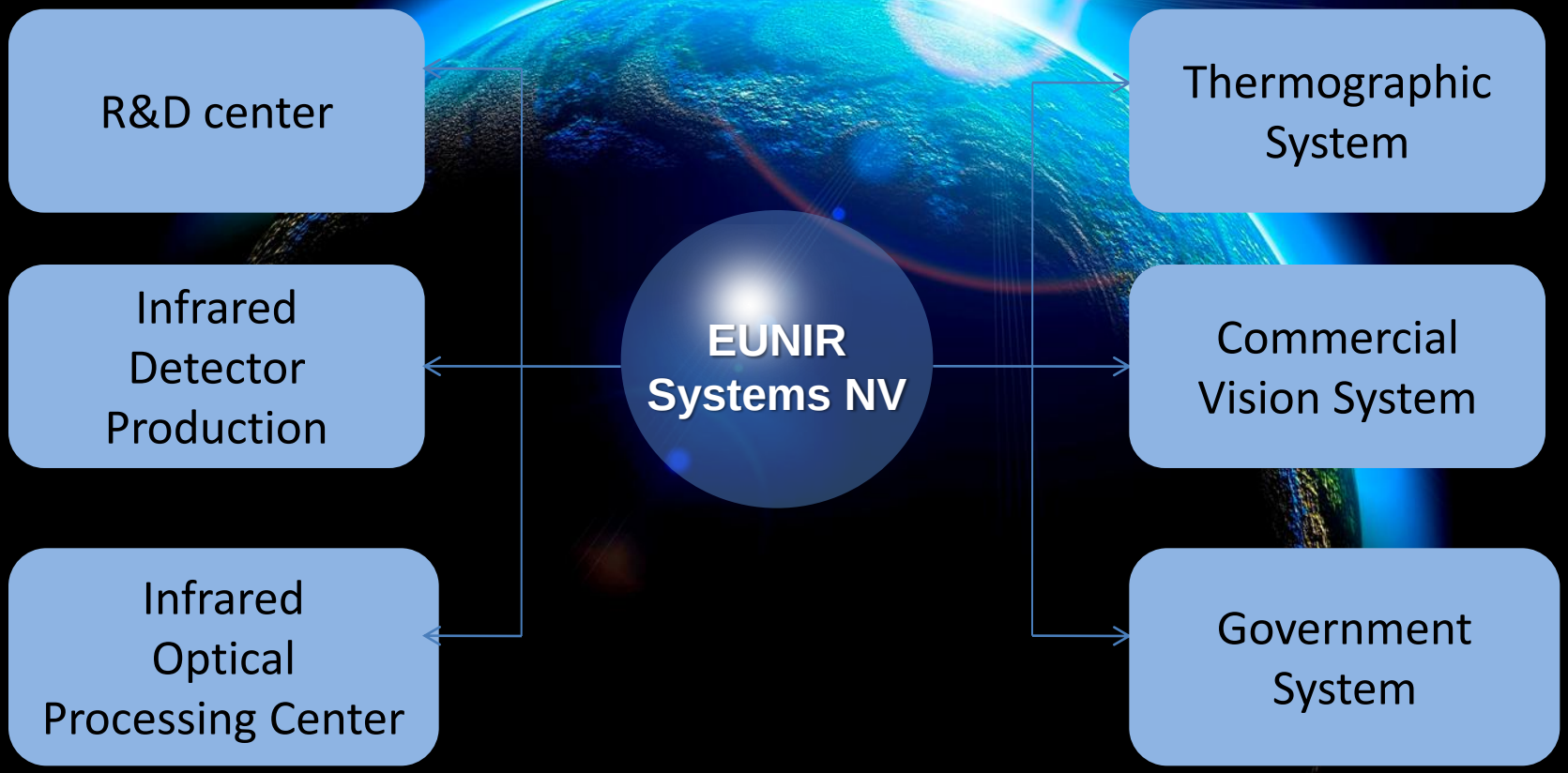

Product

All our cameras are based on using the best, European produced Sensors

Silicon MicroBolometer

160x120
384x288
640x512

50Hz

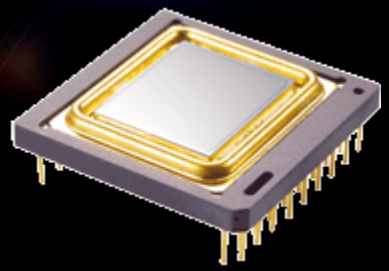

EUNIR SYSTEMS NV

PRODUCT PORTFOLIO

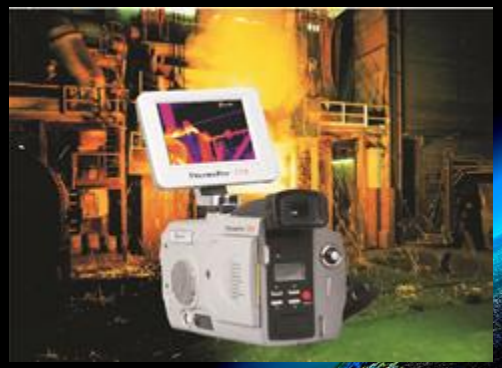

THERMOGRAPHIC

Power & electricity
Mechanical Industry
Petro-chemical Industry
Process control
Building inspection
Medical and Quarantine
Health
Life sciences
Routine maintenance

COMMERCIAL VISION SYSTEM

Vehicle night vision
Marine navigation
Firefighting
Search and rescue
Security & Surveillance
Perimeter Protection
Critical Infrastructures
Residential
Intruder detection

GOVERNMENT SYSTEM

Homeland security
Law enforcement
Para Military
Boarder/Coastal
Force protection
Coast guard

Product Overview

Guide cameras are supplied with a standard return to base 2 years warranty

Extended Warranty available. 3, 4 and 5 years.

MTBF over 30,000 working hours

Thermographic

Enhancing predictive maintenance and energy audits

thermography solutions meet the requirements of predictive mechanical and electric maintenance, building insulation, and industrial process control applications.

Visual

Thermal

Security & Surveillance

Protecting people and property with night vision

Video surveillance is crucial to protecting people and property.

And yet, daytime security cameras do not provide adequate surveillance at night—when it is most critical. What is more, installing additional lighting is often impractical.

Advances in thermal imaging technology have made today's security cameras efficient, reliable, and cost-effective. There is no reason not to make night-time video surveillance a part of your security strategy.

Visual

Thermal

Military

Helping the military see, locate, and target

Many countries are upgrading their armies' equipment to maintain military superiority in times of geopolitical instability. To an increasing extent, infrared technology is an important differentiator. A key advantage at night or in low-visibility conditions, infrared imaging enhances target acquisition during ground-based, tactical, and strategic surveillance.

Used on Land, Sea and in the Air

Transportation

Improving road safety through enhanced vision

Thermal imaging technology uses the heat that is naturally radiated by pedestrians, cyclists, animals, and other roadside obstacles to produce images, even at night and in bad weather.

This technology can significantly improve drivers' vision—and that means safer roads for everyone.

Visual

Thermal

Firefighting

Helping search and rescue professionals

Infrared cameras are the single most reliable source of information for search and rescue operations. Thermal imaging technology has matured and today enables camera manufacturers to offer a range of easy-to-use products that meet the demand for cost-effectiveness and performance.

Visual

Thermal

EUNIR SYSTEMS NV

Thermographic range

MobIR series

EasIR series

ThermoPro series

IR236

IR239

EUNIR SYSTEMS NV

Thermographic Application

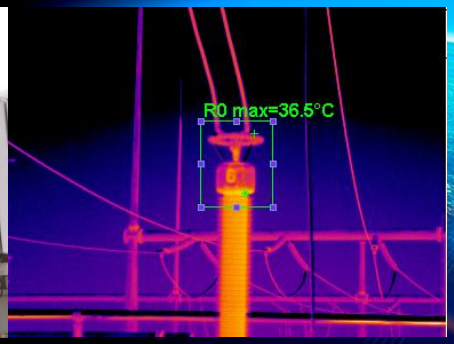

Power Plant PPM

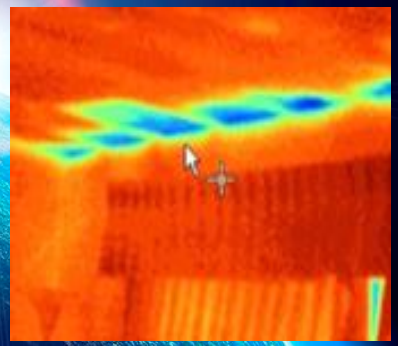

Building Inspection for Energy Saving

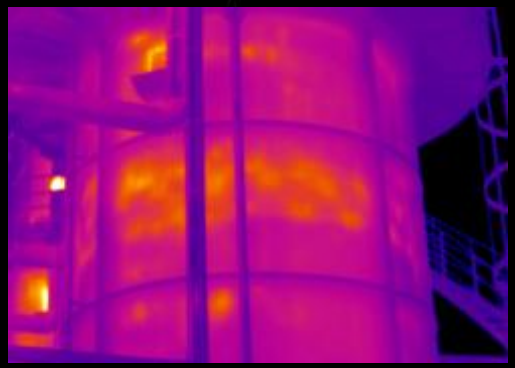

Refinery

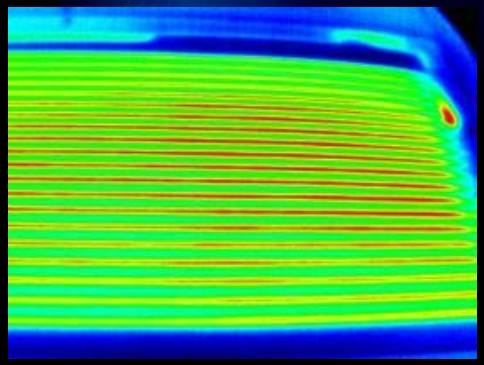

Car Manufacturing

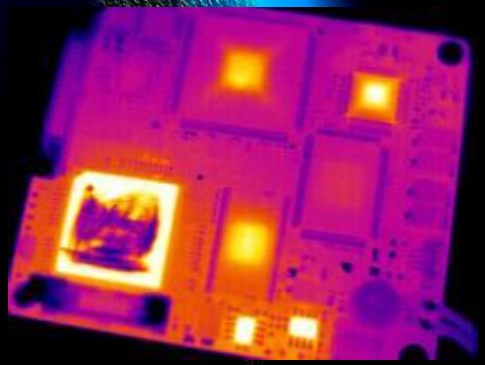

Electronics R&D

EUNIR SYSTEMS NV

Thermcore range

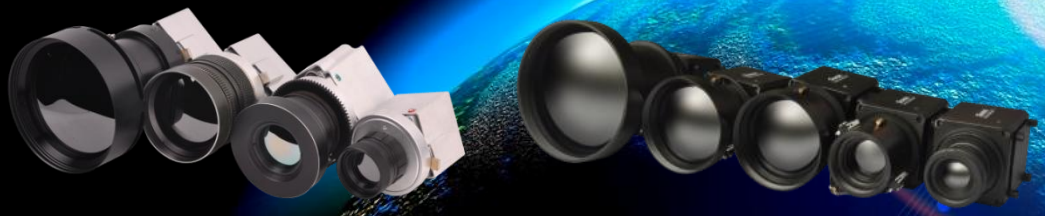

Thermcore IR11X series

Thermcore i-Module series

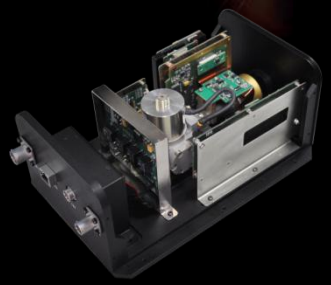

Thermcore CQ series

Thermcore CM series

EUNIR SYSTEMS NV

Thermcore range

The Thermcore range of OEM cores/modules are available to be used for integration into systems/solutions.

The cores/modules require some development work:

- ✓ **Make up cable sets from the pin out information provided**
- ✓ **Write software/program for the control of the core/module functions and features**
- ✓ **Requires encapsulation**

EUNIR SYSTEMS NV

Thermcore range

The Thermcore range of SIM cores/modules are available to be used by installers/integrators for plug and play into own branded or un-branded cameras.

Range of lens options from 8mm to 150mm with temp spot out alarms, IP and Analogue with embedded Pelco D Protocols

EUNIR SYSTEMS NV

KnightIR range

EUNIR SYSTEMS NV

KnightIR range

The KnightIR Range of cameras have been designed and manufactured to meet the demanding needs of security professionals in the protection of individuals and property

An easy plug and play camera, power in and video out with embedded Peloc D protocols for control of the camera functions.

For use in Airports National Infrastructures, Ports/Habours, residential property, what every and where ever the KnightIR meets the demand

EUNIR SYSTEMS NV

GuidIR range

EUNIR SYSTEMS NV

GuidIR range

The GuidIR Range of cameras have been designed and manufactured to meet the demanding needs of homeland security applications

Standalone systems or part of an integrated solution.

For use in the protection of our borders and coastlines against smuggling, illegal immigration and hostile invasion

EUNIR SYSTEMS NV

HandIR range

EUNIR SYSTEMS NV

HandIR range

The HandIR Range of hand held cameras have been designed and manufactured to meet the demanding needs of individuals, security, law enforcement, military and coast guard

Whether it is for hunting, search and recue, surveillance (Overt & Covert), monitoring

EUNIR SYSTEMS NV

Scope/Sight range

EUNIR SYSTEMS NV

HandIR & ScopeIR range

Law Enforcement

Maritime

Hunting

Patrolling

Boarder Patrol

Coast Guard

Force Protection

Fly Tipping

Search & Rescue

Asset Protection

Nature observing

EUNIR SYSTEMS NV

FireFitIR range

Fire FitIR HT11

Fire FitIR HD11 / HD32

EUNIR SYSTEMS NV

Transportation Night Vision - N-driver, MarinIR series

N-driver

EUNIR SYSTEMS NV

FireFitIR range

For search and rescue , High-performance, cost-effective solutions

Extremely robust products that stand up in extreme conditions

The only way to “see through the smoke” Ensures incomparable vision in a personal-issue thermal imager, even in very hot, smoke-filled environments

Fast display response and high-definition images for real-time information during operation IR images display immediately once camera is turned on, saving precious seconds in an emergency situation

Victim detection speeds searches and reduces risk. Lightweight for ease-of-use in physically-strenuous situations

EUNIR SYSTEMS NV

R & D

- Precision Optics
- Durability
- Reliability
- over 30,0000 hrs MTBF

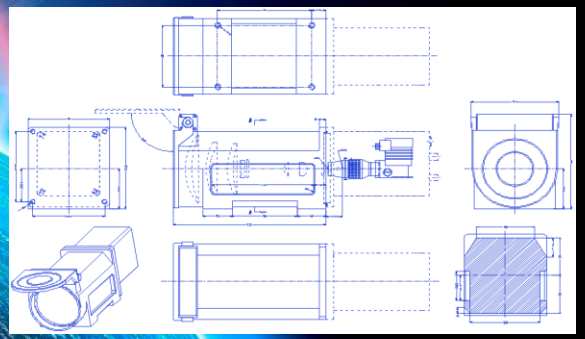

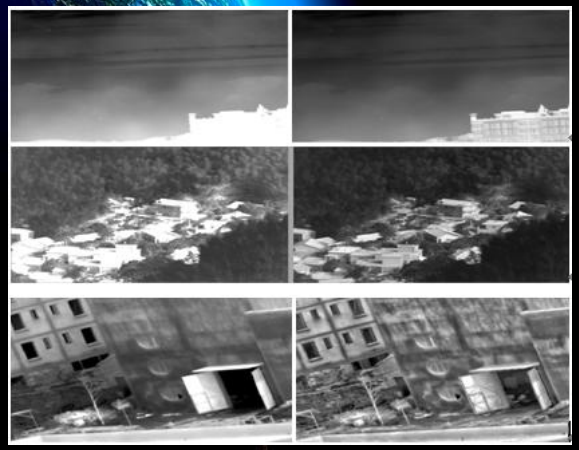

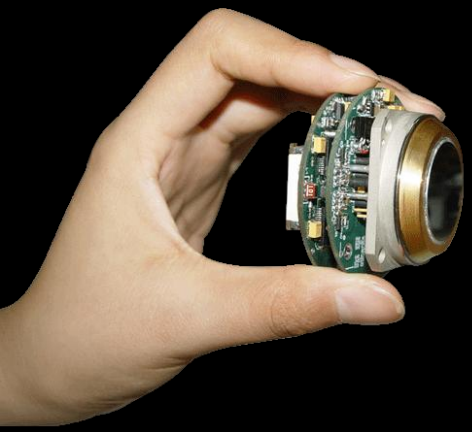

EUNIR SYSTEMS NV

Quality Control

EUNIR SYSTEMS NV

Quality Control

A dedicated team to constantly check and review production practices

Inspection of supplied components and raw materials

Random product inspection of stock units

Certification:

ISO 9001
CE
EMC
CMC

EUNIR SYSTEMS NV

Moving Forward

EUNIR SYSTEMS NV

Moving Forward

Understanding each of our business
Accepting goals and expectations
Implementation of agreements
Succeeding

EUNIR SYSTEMS NV

Why chose EUNIR

- Stock Warehousing
- Protection
- Adaptable
- Leadership
- Willingness
- Loyalty
- Professionalism
- Credibility
- Flexible
- Experience
- Quality
- Listening
- Dedication
- Demo Kit

EUNIR SYSTEMS NV

Why EUNIR

Shipping direct from our stock in Belgium
Fast lead times
All admin and support via our European headquarters
Pre & Post technical support
Professional support with demonstrations/presentations

End

Thank you for selecting EUNIR Systems NV as you supplier for Thermal Imaging Systems.

We look forward to building upon this partnerships

To build and strengthen a long term relationship

EUNIR SYSTEMS NV

EUNIR Systems NV
Kapeldreef 60
3001 Heverlee
Belgium

Tel: 0032 16 298 498
Fax: 0032 16 298 319

Email: info @ eunir.com
Web: www.eunir.com

aisa DUAL hyperspectral sensor

AisaDUAL is a high performance hyperspectral sensor system for simultaneous acquisition of VNIR and SWIR data. AisaDUAL combines the AisaEAGLE and AisaHAWK sensors in a dual sensor bracket mount and provides an economic imaging tool for remote sensing companies and researchers.

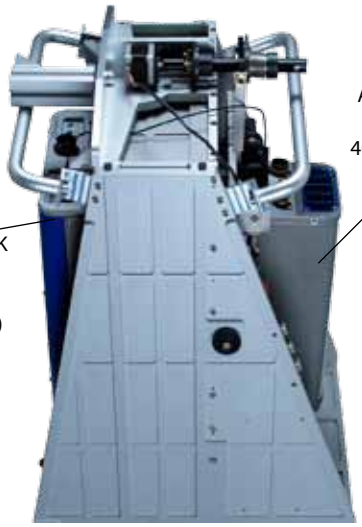

Mounted AisaDUAL sensor system,
dimensions:
L: 420 mm
W: 490 mm
H: 680 mm
Mass: 50 kg

AisaDUAL is a compact sensor, which requires minimum maintenance, and is easy to install in small aircrafts. The sensor assembly will only require a single hole in the aircraft, and fits on a standard stabilized camera platform.

In the dual sensor assembly, the AisaHAWK sensor can be aligned with respect to the AisaEAGLE to make both sensors to look at the same swath on the ground. Also, the AisaHAWK fore lens is adjustable to match the SWIR ground pixel size to that in VNIR.

AisaDUAL sensor makes a high performance hyperspectral imaging system, when integrated with an AISA data acquisition computer, RSCube software, GPS/INS sensor and power supply. Several GPS/INS sensors are currently supported in the AISA systems, like C-MIGITS III, Oxford Technical Solutions RT3000 series, Applanix POS/AV series, and AeroControl GPS/INS.

CaliGeo software supports the post-processing of the AisaDUAL sensor data.

Complete turnkey Dual System

SPECIM supplies the AisaDUAL sensor with all the system components needed to make a turnkey, ready-to-use airborne imaging system. The complete AisaDUAL system consists of:

- the AisaDUAL hyperspectral sensor
- Real time image acquisition computer with a user-friendly interface and image acquisition software (RSCube)
- GPS/INS sensor
- Power supply
- CaliGeo post-processing software

For more information about system solutions and computer and GPS/INS options available, please see the AISA Systems brochure and CaliGeo brochure.

AisaDUAL system is perfect for geolocigal applications. Sample data from Buddingtonite Outcrops, Cuprite, Nevada. (Courtesy of SpecTIR LLC.)

Spectral Imaging Ltd.
POB 110
Teknologiantie 18 A
FIN–90571 Oulu, Finland

Tel. +358 (0) 10 424 44 00
Fax +358 (0)8 551 4496
Email info@specim.fi
www.specim.fi

AisaDUAL Sensor

OPTICAL CHARACTERISTICS	TYPICAL SPECIFICATIONS VNIR			SWIR		
Spectral range	400-970 nm			970-2500 nm		
	Total 400-2500 nm					
Spectral resolution	3.3 nm			12 nm		
Spectral binning options	none	2x	4x	none	2x	4x
# spectral bands	244	122	60	254	127	63
Spectral sampling/band (nm)	2.3	4.6	9.2	5.8	11.6	23.2
FODIS (optional)	In VNIR channel					
Calibration	Sensor provided with wavelength and radiometric calibration file					
FORE OPTICS						
Swath acquisition, option 1	See data acquisition option 1 on right					
# spatial pixels	320			320		
FOV	24 degrees			24 degrees		
IFOV	0.075 degrees			0.075 degrees		
Swath width	0.43 x altitude			0.43 x altitude		
Swath acquisition, option 2	See data acquisition option 2 on right					
# spatial pixels	1024			320		
FOV	37.7 degrees			35.5 degrees		
IFOV	0.037 degrees			0.111 degrees		
Swath width	0.68 x altitude			0.64 x altitude		
ELECTRICAL CHARACTERISTICS						
Camera	CCD 12 bits			MCT 14 bits		
SNR	350:1 or 500:1 (peak)			800:1 (peak)		
	More detailed SNR data in various conditions available from SPECIM.					
Integration time	Adjustable, independent of frame rate					
Image rate	Up to 100 images/s					
Shutter	Electromechanical shutter for dark background registration in both channels, user controllable by software.					
Power consumption Complete system with rack PC Complete system with lightweight PC	 815 W 695 W					

Specifications subject to changes without prior notice.

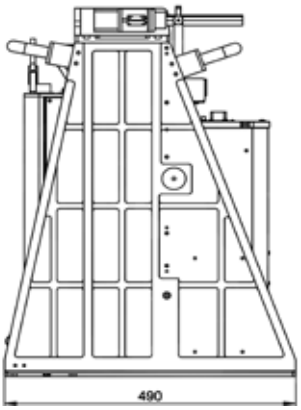

AisaDUAL sensor assembly, side view (AisaEAGLE on the right, AisaHAWK on the left)

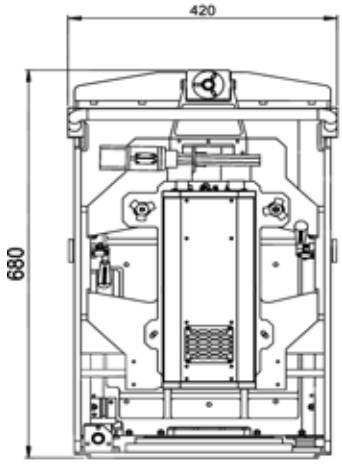

AisaDUAL sensor assembly, back view

More detailed technical drawings available on request.

DATA ACQUISITION OPTIONS

Option 1: Single computer data acquisition setup

This computer setup is used to collect both the VNIR and SWIR data with the same swath width of 320 pixels. The AisaEAGLE sensor data is spatially binned by 2 to provide 512 swath pixels. From these 512 swath pixels, 320 pixels are collected which overlap with the 320 AisaHAWK swath pixels. The VNIR and SWIR data are combined and saved in a single image covering the spectral range of 400 to 2500 nm.

This computer setup consists of a single computer with a dual input frame grabber. Images from both the AisaEAGLE and AisaHAWK are acquired synchronously with each other and with the GPS/INS data.

Option 2: Dual computer data acquisition setup

This computer setup is used to acquire and save the full swath from both the VNIR and SWIR sensors simultaneously with 1024 swath pixels from the AisaEAGLE and 320 swath pixels from the AisaHAWK. Data streams from VNIR and SWIR are saved in separate images. The VNIR and SWIR images are also processed separately in CaliGeo software.

This setup consists of two independent computers in a single rack. A 2-port intelligent KVM (Keyboard/Monitor/Mouse) switch is used to allow two computers to share one keyboard, one monitor and one mouse. One computer acquires VNIR data stream and another SWIR data stream. VNIR and SWIR sensors are triggered to acquire data frames simultaneously with each other and with the GPS/INS sensor. One of the computers is running in slave mode starting data acquisition into a file simultaneously when acquisition is started on a master computer.

The optics can be selected also so that AisaHAWK pixel size is 3 x larger than AisaEAGLE pixel size. In this way, 320 AisaHAWK pixels cover the same area as 960 AisaEAGLE pixels and wider swath can be covered with both sensors.

DATA STORAGE

In both of the above computer options, data is stored in a 200Gb (or larger) hot-swap hard disk during acquisition. The capacity is sufficient for ca. 4 hours of continuous acquisition.

AMPS - Airborne Missile Protection System

BIRD AEROSYSTEMS

AMPS

Where Innovation Meets Performance

The Threat

Military aircraft, VIP aircraft and commercial airliners are all exposed to the growing threat of Surface to Air Missile (SAM) attacks, mainly from MANPADS (Man Portable Air Defense Systems). Since the 1970s, more than 700,000 shoulder-launched missiles have been manufactured without an accurate accountability of their distribution. Over the last decade, more than 100 helicopters and transport aircraft have been shot down in Iraq and Afghanistan using such ground-based weapons, including scenarios with simultaneous firing of multiple MANPADS.

Airborne Missile Protection System

The Airborne Missile Protection System (AMPS) family of solutions is provided in cooperation between **AIRBUS Defence and Space (DS)** and BIRD Aerosystems. It is designed to automatically detect, verify, and foil SAM attacks through the effective use of countermeasure decoys (Flares and Chaff) and by Directional Infrared Countermeasures (DIRCM) that jam the missile's IR seeker and protects the aircraft.

AMPS is fully operational on military and VIP aircraft. The system is certified by leading aircraft manufactures including **AIRBUS Helicopters** and **MIL Design Bureau** that has issued several Service Bulletins (SB) for the installations on Mi-8/17.

Significantly, AMPS has also evolved into a standard system for NATO, having been selected and installed on Military, VIP and civil platforms used by NATO members, the United Nations (UN) Air Operations, the US and Canadian governments and other Air Forces around the world.

AMPS Configurations

AMPS is installed with a wide variety of detection sensors offering complete protection against any available ground to air threat:

- **AMPS-M** - Protects aircraft against Shoulder Launched Missiles (MANPADS)
- **AMPS-MV** - Protects civil and VIP aircraft against MANPADS attacks using enhanced configuration that eliminates the False Alarm
- **AMPS-ML** - Protects aircraft against MANPADS and Laser threats
- **AMPS-MLR** - Protects against MANPADS and Laser threats in addition to radar guided missiles

AMPS-M Description

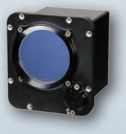

MILDS detects the missile immediately upon launch

MCDU receives the validated threat and activates the optimized countermeasure program

CFDS releases flares to counter the missile

IMU reports the aircraft movement for improved target validation

Fully Autonomous

AMPS-M operates in fully autonomous mode and provides complete protection with minimal pilot intervention. The heart of the system is BIRD's Mission Control & Display Unit (MCDU) that receives an indication/alarm of a missile launch and an incoming missile from the AIRBUS DS AN/AAR-60 (MILDS®) UV sensors and initiates the optimized countermeasure dispensing program while providing visual and audio alerts to the aircraft crew.

AMPS-M provides full threat coverage, very low false alarm rate and maximum warning time for the deployment of appropriate countermeasures. Ensuring the highest level of protection for crew and aircraft.

AMPS-M Main Advantages:

- Fully autonomous system from detection to protection
- Multi-threat handling – up to 8 simultaneous threats
- Combat proven and operational in Afghanistan, Iraq, Libya and Somalia
- Small number of compact, light-weight units allowing easy installation on all aircraft
- Stand alone configuration – no interfaces required to mission or avionic systems
- Full integration with MWS, MACS, RWR, LWR, CFDS, DIRCM (only one display and control for the whole system)
- Short installation and integration time

High Performance MWS – AN/AAR60 MILDS®

- Extremely low clutter thanks to the selected spectral band
- High spatial resolution providing discrimination between fixed and moving sources and accurate approach direction
- High probability of detection and lowest possible false alarm rate
- No emissions from the sensors (stealth)
- No cooling, short activation time
- No interference from IR light and laser
- Low weight and low power consumption

Wide Deployment

BIRD provides its customers with a turn-key solution that includes the installation, integration and support for the AMPS system.

AMPS is operational in many countries around the world including France, Germany, Spain, Italy, Australia, India, Colombia, Czech Republic and others. The system is installed on many different aircraft including: EC135, EC635, EC145, BK117, EC155, Cougar, EC225, Mi8, Mi17, UH60, S-92, CH53, B412, Huey, B407, B200, B350ER, P3C, C130 and more.

The AN/AAR60 MILDS UV sensors that detect the incoming missiles have been selected and installed on over 2000 helicopters and fixed wing aircraft of the following types: A129, AB205, AB212, AB412, AH1, B200, B350ER, B407, BK117, C130, CH-47, CH-53, Cougar, EC 135, EC 145, EC 155, EC 225, EC 635, EH-101, KUH, Mi-17, MI-8, NH90/Tiger, P3C, Puma, S70, S92, SH3D, SH60J and K, Surion, UH1, UH60, ZS532; A340, B200, B350, C130, C160, C27J, Cessna, CN235, CN295, P3C, P-X, C-X and more.

AMPS ensures the safety of flight for hundreds of aircraft operated in the most demanding operational theaters such as Afghanistan, Libya, Iraq and Somalia.

BIRD Aerosystems Company Profile

BIRD Aerosystems is a privately owned company established in 2001 and based in Israel. BIRD specializes in the development and deployment of two main product lines: Airborne Missile Protection Systems (AMPS) and Airborne Surveillance, Information and Observation (ASIO) solutions.

The company combines in-depth knowledge of the modern airborne operational requirements along with continued technological innovations to drive the development of new and advanced airborne products and solutions.

BIRD cooperates with its customers to provide turn-key programs that include operational analysis, system design, system integration and installation, project management, extended product support, and a broad range of system engineering activities including ground testing, flight testing and system certification.

BIRD enjoys extensive cooperation with several leading international companies for the worldwide development and marketing of the AMPS and ASIO solutions which are in operational use today by many countries and customers around the world including NATO forces, UN air operations, the US Government and many others.

BIRD is a company that has the necessary experience and scope to contend with the most complex operational requirements and design challenges while being able to provide personalized attention to even the most demanding customers' requirements.

propozza

BIRD
AEROSYSTEMS

10 Hasadnaot St. P.O. Box 4038
Herzliya 4614001 Israel

T. +972 - 9 - 972 - 5700
F. +972 - 9 - 957 - 9613

E. info@birdaero.com
www.birdaero.com

New 17 Micron Pixel Design!

Atom 1024

ATOM™ 1024: Uncooled Infrared Camera with XGA Resolution

- Frame Rate: 30Hz XGA, 60Hz VGA
- Very Low Power Consumption
- < 50mK Detector Thermal Sensitivity
- Lightweight
- 17 micron Pixel Technology

Shown with 50mmF1 Objective Lens

Incorporating an advanced 1024x768 microbolometer detector array, the Atom 1024 Uncooled Infrared Camera delivers extremely high resolution in an XGA format. The camera is designed for a wide variety of applications that benefit from its superb image detail and excellent thermal sensitivity. Because of the camera's small compact size and low power consumption, the Atom 1024 is easy to integrate, and ideally suited for a wide range of military and COTS thermal imaging systems.

The Atom 1024's short thermal time constant produces superior thermal image quality even while imaging fast moving objects, making the system an ideal choice for handheld, ground vehicle and airborne EOIR platforms and advanced fusion-based night vision systems.

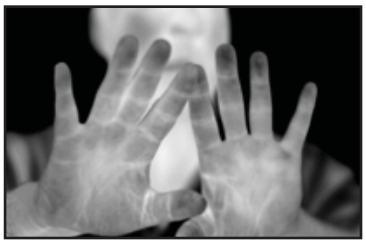

FEATURES	BENEFITS
• 1024x768 resolution with 17 micron pixels	• XGA resolution for high performance applications
• < 50mK detector thermal sensitivity	• Increased range and detection performance
• 30Hz XGA and 60Hz VGA frame rate	• Smooth motion within scene
• < 10ms thermal time constant	• Less image blur – sharp images of objects in motion
• < 1.7 Watts (LVTTL)	• Longer battery life
• Mil-Spec option	• Ready to integrate into tactical systems

SOFRADIR-EC

Atom 1024

Camera Link Interface

GigE Interface

LVTTL Electronics

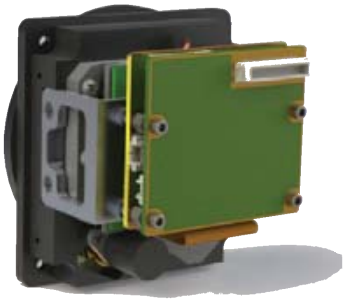

ATOM 1024 IMAGER SPECIFICATIONS

Description	Camera Link	GigE	LVTTL
Infrared Detector	Uncooled ASi Microbolometer		
Array Size	1024 x 768 pixels		
Pixel Pitch	17 microns		
Frame Rate	30Hz XGA (Option for 60Hz VGA)		
Thermal Time Constant	< 10 ms		
Detector Sensitivity (F1)	< 50 mK		
Time to First Image	< 4 seconds		
Video Processing	Non-uniformity correction, Auto/Manual gain, BPR, Digital Zoom, Digital Filtering, Built-in Self Test, Test patterns		
Operating Temperature Range	-40°C to 60°C	-30°C to 60°C	-40°C to 60°C
Non-operating Temperature Range	-45°C to 70°C		
14-bit Streaming Digital Output	Camera Link	Gigabit Ethernet	LVTTL
Serial Control Interface	Camera Link	GigE	RS232
Graphical User Interface	Included		
Size (lens not included)	2.4"x 2.7"x 2.7" W x H x L	2.4"x 2.7"x 3.7" W x H x L	2.4"x 2.7"x 2.25" W x H x L
Weight (lens not included)	< 0.4 kg	< 0.5 kg	< 0.2 kg (< 0.1 kg electronics only)
Input Voltage	6-12 VDC	6-12 VDC	3.3 or 3.6 VDC
Power Consumption	< 3.6 W	< 3.6 W	< 1.7 W

ORDERING INFORMATION

ATOM Model	Lens	HFOV (nominal)
1024-73L (LVTTL) 1024-73C (Camera Link) 1024-73G (GigE)	13mm, f1.1 manual focus	73°
1024-40L (LVTTL) 1024-40C (Camera Link) 1024-40G (GigE)	25mm, f1.2 manual focus	40°
1024-20L (LVTTL) 1024-20C (Camera Link) 1024-20G (GigE)	50mm, f1.2 manual focus	20°
1024-40/6.6L (LVTTL) 1024-40/6.6C (Camera Link) 1024-40/6.6G (GigE)	25-150mm, f1.4 continuous zoom motorized focus	6.6 - 40°
1024-40/4.4L (LVTTL) 1024-40/4.4C (Camera Link) 1024-40/4.4G (GigE)	25-225mm, f1.4 continuous zoom motorized focus	4.4 - 40°

Technical characteristics described in this data sheet are for information only and are not contractual. Because of ongoing product enhancements, specifications are subject to change without notice. Export of these products from the United States is controlled by the US Government. Prior authorization is required for re-export or transfer.

SOFRADIR-EC

SOFRADIR EC, INC. 373 US Hwy 46W, Fairfield, NJ 07004 USA
Phone: 973-882-0211 Fax: 973-882-0997

Groupe SOFRADIR

© 2012 - All rights reserved. An ISO 9001 Certified Company.

Edition: 01-12 rev07

BIRD XGA

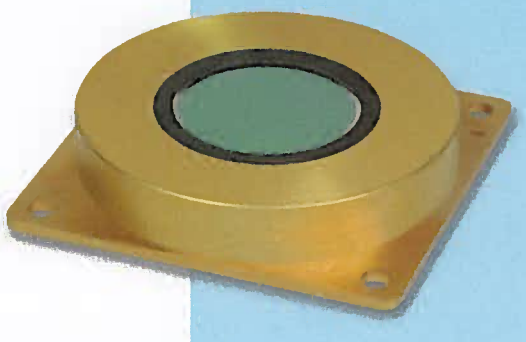

1024 x 768, 17µm pixel pitch VOx Microbolometer

Description

Bird XGA is a large format of uncooled LW IR detector, specially designed to address high-end, high performance applications. The detector ROIC integrates a low-noise high sensitivity and wide dynamic range.

Bird XGA is enhanced with the cutting edge Vanadium-Oxide technology, thus providing the ultimate sensor device for both military and civil applications.

Applications

- Thermal gun site
- Long-range surveillance systems
- Missile's applications
- Remote weapon station
- Long-range flame detection
- Driver's night-vision systems
- EO/IR tactical payloads

Main Features

- Vanadium Oxide technology
- Uncooled operation with or without TEC
- 4 analog outputs
- Rolling mode bottom-to-top scanning
- 1024x768 pixels focal-plane array
- 17µm pixel pitch
- Internally computed coarse-NUC (optionally also R/W)
- Adjustable GAIN & Integration time
- Parallel/Serial communication
- Built-in (CMOS) FPA temperature diode gauge 6mV/K
- Mil-std qualification

SCD USA
SEMI CONDUCTOR DEVICES USA

Typical Specifications

FEATURE	DETAILS
Spectral Response	8µm-12µm
Array Format	1024 x 768
Nominal Frame-Rate	60Hz
Video Output Span	2V (0.5V÷2.5V)
Power Supplies	Bolometer 6.5V; Video O/P 5.5V; Digital 1.8V
Power Dissipation	700mW (@60Hz frame rate, 25°C FPA Temp)
Temporal NETD	<45mK (F#/1, 25°C FPA Temp, 60Hz frame rate)
Thermal Time Const	12mSec
Dynamic Range	100°C (nominal gain)
Response	5mV/K to-50mV/K (selectable)
Pixel Operability	99.5%
FPA Temp. control	Thermo-Electric-Cooler
Size	52mm X 52mm X 11mm (excluding pins & vacuum tube)
Weight	32g
Operating Temp	Minus 40°C to Plus 71°C
Storage Temp	Minus 40°C to Plus 80°C
Vacuum Life Time	14 years (at 25°C Storage temp)

Specifications are subject to change without further notice

SEMI CONDUCTOR DEVICES USA

SCD.USA LLC 4325 Woodland Park Drive, Suite #104, Melbourne, FL 32904 USA
Phone: (321) 724-6146 • Toll-free: (866) 9SCDUSA (972-3872) • Fax: (321) 724-6267
E-mail: contactus@scdusa.com • Web site: www.scdusa.com

BLACKBIRD

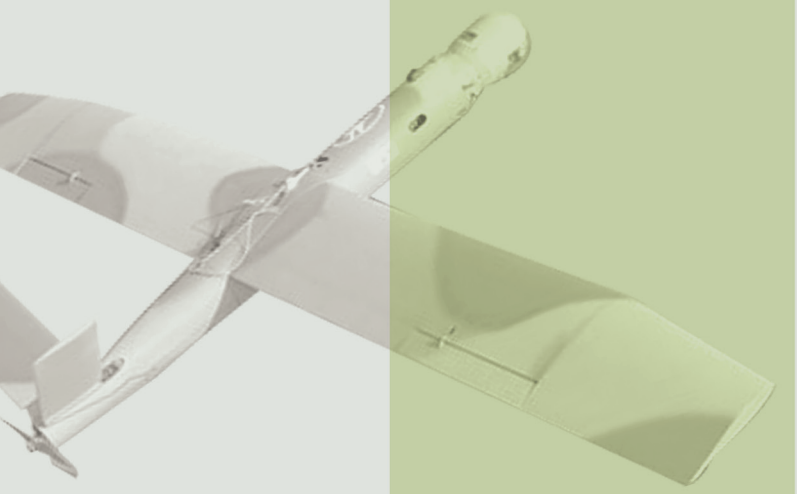

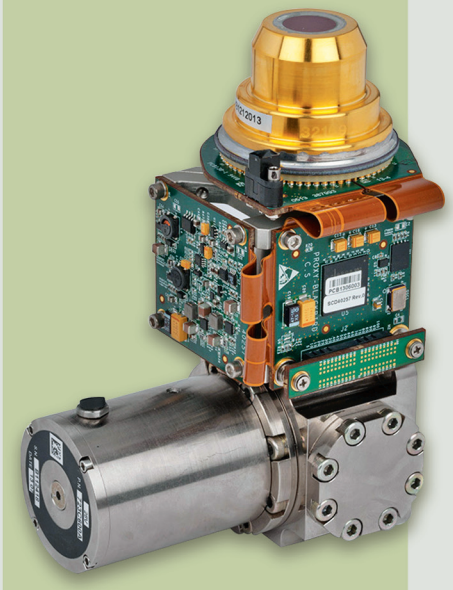

MWIR InSb detector, 1920 x 1536 format, 10µm pitch, Digital ROIC

Description

BLACKBIRD is a state-of-the-art MWIR detector, which is an extension to the High Definition family of detectors at SCD. It includes a 3 Mega-pixel FPA in 1920x1536 pixels format and 10µm pitch. The new FPA is based on SCD's mature InSb technology and on a digital readout circuit implemented in advanced CMOS process. The FPA is very similar in size to SCD's SXGA format Hercules detector and can actually be packaged in the same Dewar. This yields a very large format detector with outstanding image quality, high frame rate, and relatively compact size.

Applications

- Persistent surveillance
- Long/medium range Surveillance & Targeting
- IRST
- MWS
- Thermography

Main Features

- High sensitivity: Low readout noise, Low dark current, High Quantum Efficiency
- Range of gain possibilities
- High frame rate: ≥ 90 Hz in full frame
- Simple electronic interface

SemiConductor Devices

Typical Performance

PARAMETER	TYPICAL VALUE
Detector type	InSb 2D array
FPA spectral range	1÷5.4 µm
Format	1920×1536
Pitch	10 µm
Integration modes	ITR, IWR, others
Integration capacitors and their Floor Noise (FN) *	0.4Me- ; FN = 60e-
	0.7Me- ; FN = 90e- (ITR mode only)
	2.5Me- ; FN = 370e-
	4.5Me- ; FN = 950e-
Maximum frame rate (full format, 4 video ports)	≥ 90 F/s
Video output	Digital output, 4 / 2 / 1 ports** (LVDS, 32:4 Channel link)
Digital signal resolution	13 bit
Readout mode	Normal / 2x2 Binning
Readout direction	Bottom-up / Left-Right
Windowing	Flexible: at 2 row steps
NETD (2.5Me- Cap.)	< 25mK at 70% well fill capacity
Local Residual Non Uniformity	0.04% STD/DR at 10-90% well fill capacity
IDCA optical parameters ***	F/3, spectral range: 3.6÷4.9 µm (defined by cold filter)
Cooler options	Full specification: 1W cooler Reduced specification (e.g. 1920×1080 format, 60Hz): 0.75W cooler
Dimensions (with Ricor K543 1W integral rotary cooler)	Weight – approx. 1.1Kg Length (optical axis) – 150 mm

* ITR and IWR modes are possible unless otherwise noted. Floor noise is specified in IWR mode. Floor noise in ITR mode expected to be equal or lower than IWR mode.

** Full frame output is enabled with 1, 2 or 4 video ports. Compared to 4 ports the 2 or 1 video ports enable lower power consumption while max. frame rate is reduced.

*** Other optical configurations are possible.

Specifications are subject to changes without further notice

www.studio3.co.il

SCD/UNC/41843-0313

SemiConductor Devices

• P.O. Box 2250, Haifa 31021 Israel • Tel: (+972)-4-9902535 9902500
• Fax: (+972)-4-9902627 • e-mail: marketing@scd.co.il • Web: www.scd.co.il

Chassis Systems Control

LRR3: 3rd generation Long-Range Radar Sensor

BOSCH
Invented for life

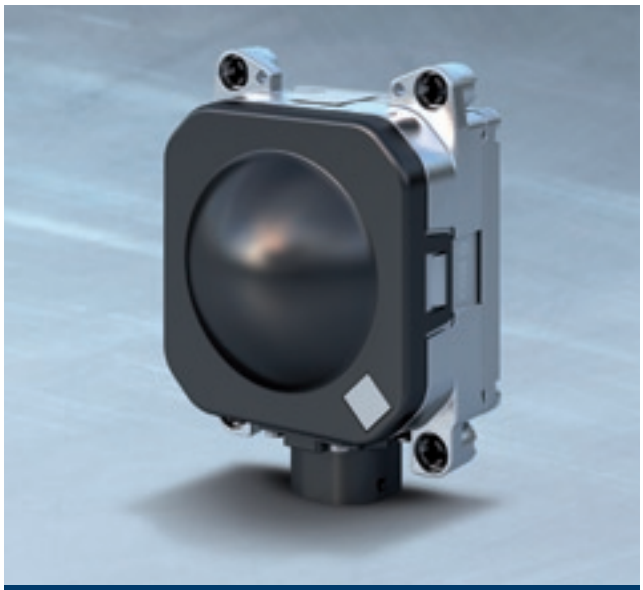

Customer benefits

- Best-in-class price performance ratio by using cost-effective SiGe technology
- Excellent measurement accuracy and object separation capability (velocity, angle, distance)
- Sensor performance unaffected by harsh weather conditions (snow and ice) due to optional lens and radome heating
- Adjustable detection range via modification of the focusing element (lens aperture)
- Scalable system performance with multiple sensor configurations including sensor data fusion
- Robust sensor design allows application even in heavy commercial vehicles
- CAN and FlexRay interfaces allow for easy integration into the vehicle

Operating principle

The main task of the radar sensor is to detect objects and measure their velocity and position relative to the movement of the host radar-equipped vehicle. To do this, the sensor has four antenna elements that simultaneously transmit radar waves in the frequency range between 76 and 77 GHz. These waves are reflected by objects in front of the vehicle. By comparing the amplitudes and phases of the signal echo received by the antenna elements, conclusions about the objects' position can be drawn. The relative speed of objects is measured using Doppler effect (shift in frequency between the reflected and transmitted signals) and distance to the object can be determined by the time lag.

Mechanical sensor design

The robust sensor design without any mechanically moving parts and its high mechanical vibration resistance allows the application in commercial vehicles, particularly in heavy trucks. An optional lens and radome heating is implemented to allow full sensor performance even under bad weather conditions (snow and ice). Important parameters and interfaces such as field of view (opening angle), the configuration of the car connector and the position of the mirror for the optical sensor alignment can be customized.

Standardized manufacturing processes and the usage of fully automotive qualified electronic devices (according to AEC Q100) guarantee the best quality and reliability. The cost-effective design encourages application in all segments. It also makes advanced driver assistance systems with multiple sensor configurations (complementary or redundant) economically viable.

Technical features	
Frequency range	76...77 GHz
Distance	0.5...250 m
Accuracy	±0.1 m
Relative speed	-75 ...+60 m/s
Accuracy	±0.12 m/s
Vision range	
Horizontal opening angle	30° (-6 dB)
Vertical opening angle	5° (-6 dB)
Modulation	FMCW
Max. number of detected objects	32
Operating temperature	-40°C...+85°C (periphery)
Vehicle connector	MQS 8 Pins
Cycle time (incl. auto diagnosis)	typically 80 ms
Dimensions (H x W x D)	77 mm x 74 mm x 58 mm
Weight	285 g
Power consumption	typically 4 W
ISO certification	ISO 15622 Class IV sensor

Sensor architecture

The LRR3 sensor is a monostatic Frequency Modulated Continuous Wave (FMCW) radar with four fixed beams. An important aspect of the sensor architecture is the high level of integration for the RF-functionality as well as for the sensor control unit and the signal processing. This results in a highly reliable and compact sensor. We use cost-effective, fully silicon based technology for the RF-components. Innovative signal processing algorithms allow excellent measurement performance and the handling of complex traffic situations such as a “lane free detection” by angular separation of objects. Our dedicated safety concept guarantees the compatibility of the sensor with safety relevant applications.

The sensor consists of two PCBs:

- The RF-module contains the RF-circuitry (SiGe-MMICs) and the Radar-ASIC with integrated modulation control and the signal pre-processing (pre-amplification, A/D conversion, filtering).
- The sensor control unit contains the microcontroller, the System-ASIC and optionally a FlexRay transceiver. The integrated sequencer takes over control tasks of the radar sensor. This enables the handling of new signal processing algorithms by the microcontroller as certain time consuming task schemes are outsourced and taken over by the Radar-ASIC. The microcontroller has been developed especially for driver assistance systems. The System-ASIC forms an essential part of the safety concept. It provides the power supply and contains the CAN interfaces.

Sensor performance

The LRR3 sensor exhibits a combined patch lens antenna which is well suited for large frequency ramps allowing a high resolution in distance. Its advanced antenna design enables a detection range of 0.5 up to 250 m with a field of view of 30°. The field of view can be customized to an opening angle up to 45° by modifying the aperture of the lens. LRR3 provides excellent measurement accuracy of angle, velocity and distance as well as object separation.

Applications

The LRR3 is the centerpiece of the automatic distance and speed control system ACC (Adaptive Cruise Control) and Predictive Emergency Braking Systems. ACC and the Predictive Emergency Braking Systems network the radar sensor with the ESP® system.

ACC uses information from the long-range radar sensor to control the vehicle’s speed by automatically braking and accelerating so that it maintains at a predefined minimum distance from the preceding vehicle.

Our Predictive Emergency Braking Systems continuously monitor the situation in front of the vehicle and trigger appropriate collision avoidance/mitigation measures in critical situations. They support the driver with an intelligent predictive warning concept and also provide effective emergency braking assistance in critical situations. If a collision is unavoidable, the system automatically triggers emergency braking in order to reduce the risk of injury.

Via intelligent networking of our radar sensor with components and systems installed in the vehicle or by integrating information of other sensors such as a camera or additional radar sensors we enable new applications or enhancements of existing functions. Through the use of multiple sensors and components we further increase the safety of vehicle occupants and other road users without increasing cost. Bosch collects this networking of components and systems under the name CAPS – Combined Active Passive Safety.

Robert Bosch GmbH
Chassis Systems Control
Driver Assistance

Postfach 16 61
71226 Leonberg
Germany

www.bosch.de/k
www.bosch-acc.com

Printed in Germany
292000P03W-C/SMC2-200906-En

© Robert Bosch GmbH 2009. All rights reserved, also regarding any disposal, exploitation, reproduction, editing, distribution, as well as in the event of applications for industrial property rights.

Cardinal 640
640x512/15µm InGaAs Detector with digital SNIR ROIC

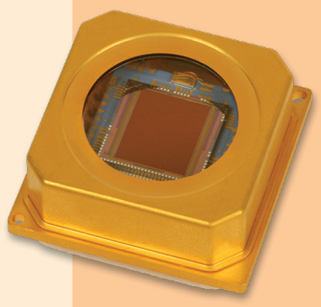

Detector

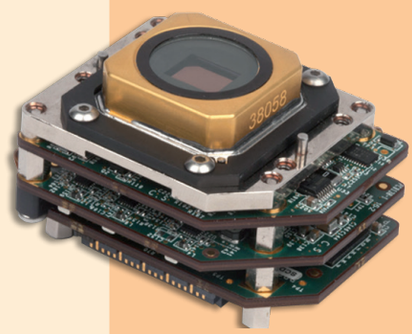

Detector with proximity electronics

Description

The FPA consists of the all-digital SNIR ROIC (based on the 0.18µm CMOS process) and state-of-the-art planar InGaAs P-I-N diode array.
The package includes a Thermo Electric Cooler (TEC) that can be utilized for cooling the FPA for low light level scenario.
The low power proximity board provides the FPA timing and sensitive power supplies. It has a Camera Link Interface similar to the Pelican-D. TEC control electronics are incorporated as well.

Applications:

- High Quality Daylight SWIR Imaging
- Low light level imaging
- Active Imaging
- Hand Held Goggles
- Airborne EVS
- Payloads
- Driving systems
- Non-Destructive Testing

Main Features:

- High frame rate, Global Shutter
- Low power Camera Link interface
- Low floor noise mode with CTIA stage
- Special features:
  Two dimensional Laser Range Finder (TLRF)
  Asynchronous Laser Pulse Detection (ALPD)

SemiConductor Devices

Preliminary Datasheet

PARAMETER	VALUE
Format & Pitch	640x512, 15µm
Spectral Range	Standard: 0.9 - 1.7µm (SWIR) Optional: 0.4 - 1.7µm (VIS-SWIR)
Quantum Efficiency	>80% at 1550nm See graph below for typical spectral response
Dark current density (Jd)	< 1.5 nA/cm² @ 280K
Pixel Operability	> 99.5%
Operating Modes and well capacity	High gain (for Low Light Level imaging) - 12Ke Low gain (for high quality daylight imaging) - 0.6Me
Maximum FR at full window (low gain mode)	350 F/s @ 13 bit resolution (80MHz clock rate) Global Shutter
Windowing	Flexible, 2 rows step
ROIC Noise (typical)	High gain 45e (with CDS) Low gain 180e
FPA Power Dissipation	< 100mW @ 60 F/s
Ambient operating temperature	-40c to 71c
Package	Metallic (vacuum tight) low SWaP, 30 x 30 mm²
Cooling capability	Down to -10C @ 30C environment
Proximity electronics (optional)	Camera Link interface Power dissipation: < 1.7W @ 60Hz, 25c environment temperature (without TEC) TEC control circuitry Frame CDS support EMC compatibility to MIL-STD-461C

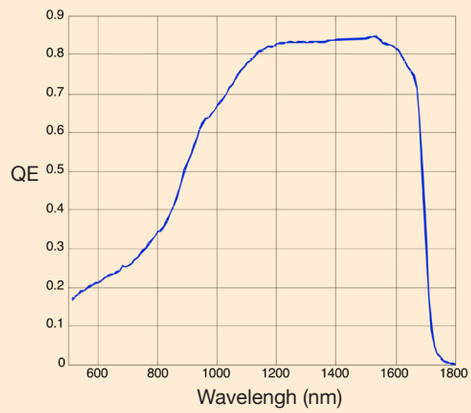

Specifications are subject to changes without further notice

• P.O. Box 2250, Haifa 31021 Israel • Tel: (+972)-4-9902535 9902500
• Fax: (+972)-4-9902627 • e-mail: marketing@scd.co.il • Web: www.scd.co.il

SemiConductor Devices

SCD/UNC/0312-37663

now-branding.co.il

Common SWIR Test | SWIR Camera Testing | Electro-Optical Test Systems | CI Systems - Internet Explorer

http://www.ci-systems.com/common-SWIR-tests

Common SWIR Test | SWIR ...

File Edit View Favorites Tools Help

Contact

- Name:
- E-mail:
- Phone:
- Company:
- Country:

Common SWIR Test

CI Systems' hardware together with its integrated test software provides the basic platform for electro-optical testing in a known and reliable test environment. Basic tests, such as MTF, Resolution, Dynamic Range, SNR and FOV are necessary to determine the imager performance. Other tests are available upon request for the needs of your specific UUT.

Common tests performed on SWIR Imagers

Modulation Transfer Function (MTF)

Minimum Resolvable Contrast (MRC)

Uniformity

Resolution

SNR

Other tests performed on Visible Imagers - optional

Gray level (linearity)

Dynamic Range

3D noise

Blooming

Distortion

FOV

IFOV

FLIR Camera Testing
- Common FLIR Tests
- IR Compact Field Tester
- Blackbodies
- Collimators
- Infrared Targets

SWIR Camera Testing

Day Camera Testing

Laser Testing

Detector Testing

Boresight Testing

Missile Warning System Testers

E-O Tests Search

Blackbody Search

Collimator Search

Contact

* Name:

Home » Electro-Optical Test Systems » FLIR Camera Testing » Common FLIR Tests

Common FLIR Tests

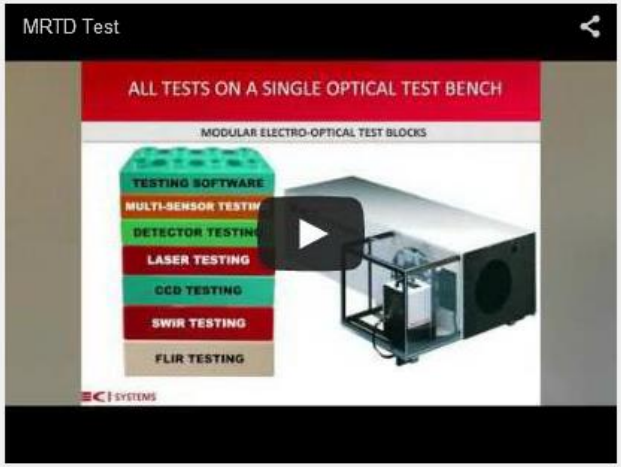

CI Systems' hardware together with its integrated software provide the basic platform for a known and reliable electro-optical test environment.

Standard algorithms for MTF, NETD, SiTF, MRTD and Uniformity testing are available in the provided software, they are necessary tools to determine the imager performance. Additional algorithms are available upon request if required for your specific Unit Under Test (UUT).

Common tests performed on Thermal Imagers

- Minimum Resolvable Temperature Difference (MRTD)
- Noise Equivalent Temperature Difference (NETD)
- Modulation Transfer Function (MTF)
- Signal Transfer Function (SiTF)
- Line of Sight retention (LOS)
- Uniformity

CI SYSTEMS

FLIR Camera Testing
SWIR Camera Testing
Day Camera Testing
Laser Testing
Detector Testing
Boresight Testing
Missile Warning System Testers

E-O Tests Search

Blackbody Search

Collimator Search

MTF TEST

Electro-Optical Test Systems

CI provides test benches (or stations) for Electro-Optical (E-O) systems composed of multiple sensors (or channels). These benches are built to provide a comprehensive turnkey solution for all the sensors' testing needs of the E-O system in question. These stations are based on MIL-Standard test equipment that can be used in all stages of the UUT's life cycle. All or some of the tests listed below can be performed by a single E-O turn-key station.

FLIR Camera Testing

CI Systems' FLIR turn-key test stations carry out all the necessary tests to verify and compare the quality of an infrared/thermal camera. The FLIR test systems are based on CI Systems' NIST traceable blackbody radiation sources, collimators and special thermally controlled targets, designed to provide very accurate IR test patterns. All these combine to project standardized targets with known geometry and intensity to the Unit Under Test(UUT).

SWIR Camera Testing

CI systems' SWIR turn-key test stations simulates low light conditions to test special application cameras. An intuitive user friendly software carries out a variety of tests. The test stations are radiometrically calibrated to perform comprehensive SWIR tests.

Preliminary

Xenics
Infrared Solutions

Imagine the invisible

Scientific

Cougar-640

LN2 cooled high resolution SWIR camera

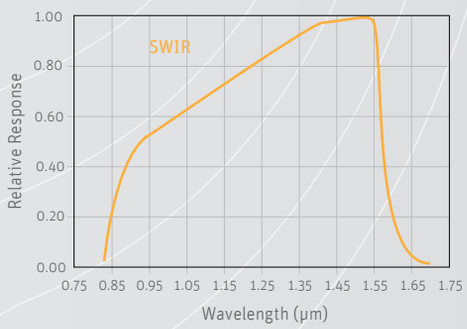

Designed to have the lowest noise and highest sensitivity for low-light-level measurements

The Cougar-640 excels in performance for any R&D spectroscopy or semiconductor failure analysis task. These demanding applications, where very low light levels need to be measured, require cameras with low dark current, low noise and best response in the SWIR range. All of these features are now combined in one single camera.

The in-house developed InGaAs detector of the Cougar-640 is optimized for 77K operation, using Liquid Nitrogen (LN2) cooling and is based on a SFD (Source Follower per Detector) read-out topology for ultra-low noise levels ever seen (15 e-). Integration time of several hours is possible with the RWI (Read While Integrate) feature with non-destructive readout and very low dark current of less than 10e-/second.

The Cougar-640 features a high image resolution of 640 x 512 with a 20 µm pixel pitch and full 24 bit ADC. Camera interfacing is provided via standard CameraLink for ease of integration.

Designed for use in

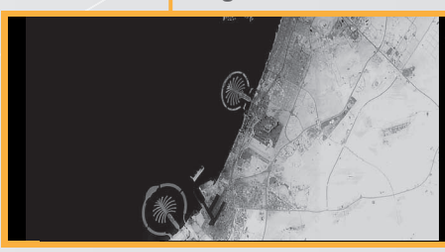

Astronomy

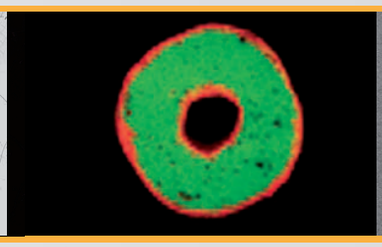

Lab spectroscopy

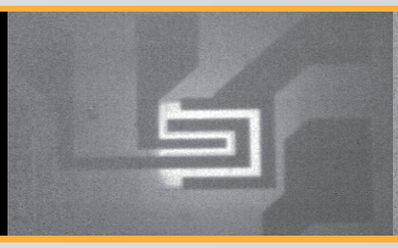

Photon emission 10x zoom

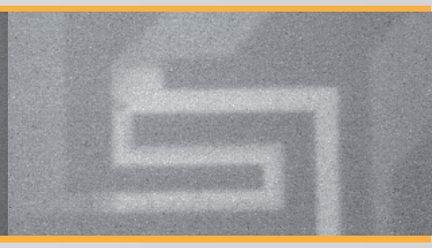

Photon emission 20x zoom

Applications

- Astronomy
- Raman spectroscopy
- Low light level SWIR imaging
- High resolution imaging spectroscopy
- Failure analysis via photon emission or electro-luminescence

Benefits & Features

- Lowest noise
- High sensitivity
- Low dark current
- Windowing for enhanced focusing
- Measuring extreme low light signals
- Extreme long integration time with non-destrcutive readout

Technical drawings of electronics housing and Dewar

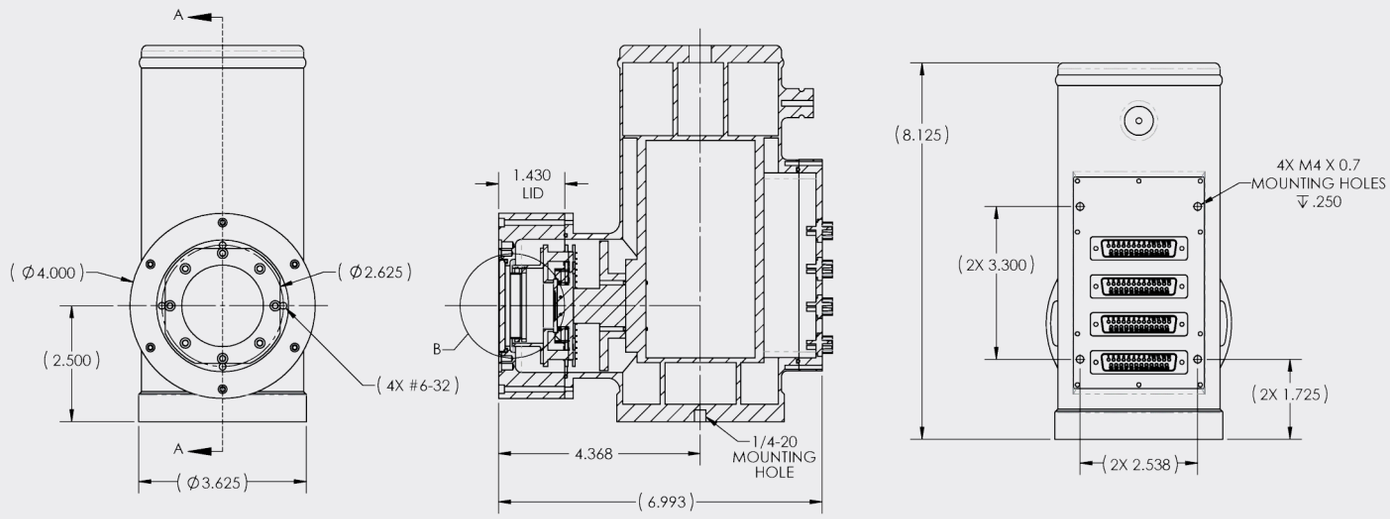

Specifications

Camera specifications	Cougar-640
Lens (not included)	
Optical interface	Custom lens mount
Imaging performance	
Frame rate (full frame)	1.42 Hz
Window of Interest	Minimum size 2 x 4 pixels
Exposure time range	Illuminated mode with ITR: 12.5 ns – 53.7 sec Emission mode with RWI: 0.7 sec – till saturation
Full well	400.000 e-
Gain (e-/ADU count)	2.2 µV/e-
Noise	15 e- (@T=77K in RWI mode)
Dark current	< 10 e-/s (@ T=77K)
A to D conversion resolution	24 bit
Interfaces	
Camera control	CameraLink
Image acquisition	Base CameraLink (24 bit)
Trigger	3.3 V CMOS levels (trigger in & out)
Power requirements	
Power consumption	< 600 mA
Power supply	12 V
Physical characteristics	
Dimensions electronics housing	100 W x 130 H x 40 L mm³
Dimensions Dewar	93 W x 207 H x 178 L mm³
Weight electronics module	0.6 kg
Weight Dewar	2.1 kg

Array specifications	XFPA-1.7-640-LN2
Array Type	InGaAs
Spectral band	0.9 to 1.7 µm @ room temperature 0.9 to 1.55 µm @ 77K cooling
# Pixels	640 x 512
Pixel Pitch	20 µm x 20 µm
Array Cooling	LN2 (77K)
Pixel clock frequency	125 kHz
Pixel operability	> 98%

Product selector guide

Part number	Cooling	Digital output interface	Frame rate (Hz)	ADC
XEN-000076	LN2 (77K)	CameraLink	1.42	24 bit

XB-091 issue 01 | Information furnished by Xenics is believed to be reliable. However, no responsibility is assumed for possible inaccuracies or omissions Specifications are subject to change without notice. This information supersedes all previously supplied information.

www.xenics.com
www.sinfrared.com

Xenics Headquarters
Ambachtenlaan 44, BE-3001 Leuven, Belgium
T +32 16 38 99 00 • sales@xenics.com

Xenics
Infrared Solutions

ISO 9001:2008 certified

HORIBA
Scientific

Synapse EM

Spectroscopy EMCCD Camera OSD-SY-03

ELEMENTAL ANALYSIS
FLUORESCENCE
GRATINGS & OEM SPECTROMETERS
OPTICAL COMPONENTS
FORENSICS
PARTICLE CHARACTERIZATION
RAMAN
SPECTROSCOPIC ELLIPSOMETRY
SPR IMAGING

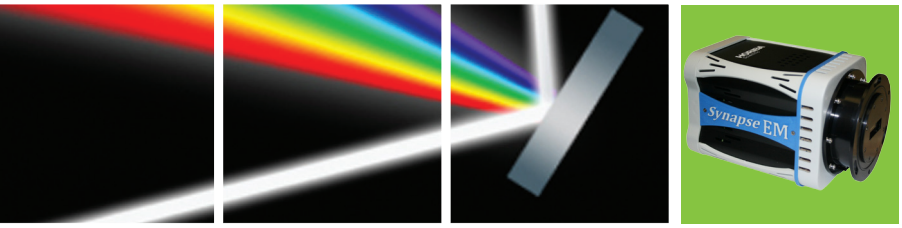

EMCCD for low-light and ultrafast spectroscopy

Key Features and Benefits

- **1600 × 200 or 1600 × 400 EMCCD sensor**
  16 × 16 µm pixel size for high spectral resolution
- **25.6 × 3.2 mm or 25.6 × 6.4 mm image area**
  Ideal for high-speed or multi-track spectroscopy
- **Back- and front-illuminated EMCCD**
  QExtra anti-fringing back-thinned technology
- **Deep thermoelectric cooling**
  Air or liquid circulation to minimize dark current
- **Dual readout modes**
  EMCCD or CCD for a broad range of light conditions
- **Readout rates up to 3 MHz**
  Acquires more than 1600 spectra per second
- **Single fused-silica vacuum window**
  Minimizes reflection losses from UV to near-IR

Spectral rate[1]	1613 spectra/s max.
Dark current[2]	< 0.002 e^-/pixel/s
Readout noise	< 1 e^- in EM mode
Non-linearity[3]	< 0.75%

Key Applications

- Raman spectroscopy
- SERS, TERS
- Multi-track spectroscopy
- Transient spectroscopy
- Single-molecule spectroscopy

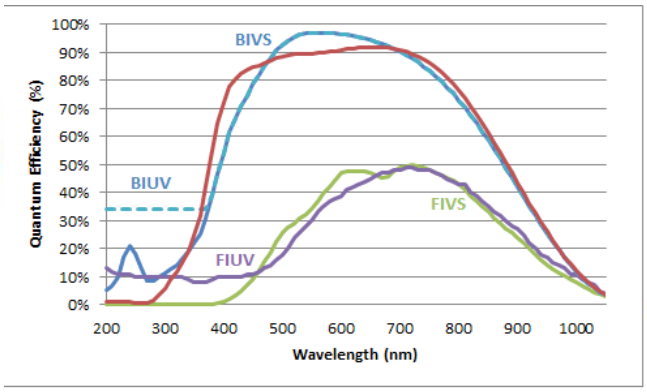

Quantum efficiency curves at +25° C

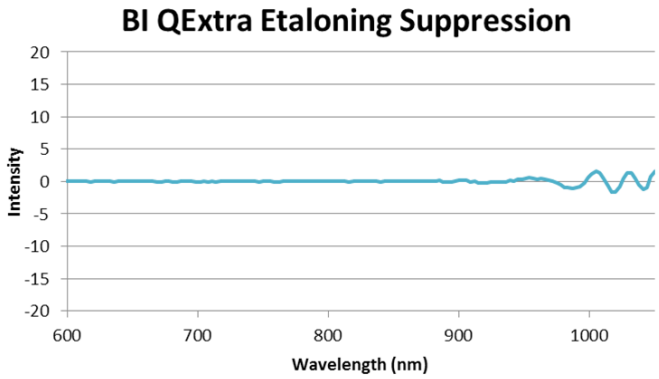

Measured etaloning

JOBIN YVON Technology

Synapse EM Specifications

Sensor	Front-illuminated (FI), back-illuminated (BI), scientific grade 1		
Active pixels	1600 × 200		1600 × 400
Pixel size	16 µm × 16 µm		
Image area	25.6 mm × 3.2 mm		25.6 mm × 6.4 mm
Output node well capacity			
High Sensitivity mode	300,000 e^-		
Electron Multiplying mode	1,300,000 e^-		
Register Well Depth			
High Sensitivity mode	450,000 e^-		
Electron Multiplying mode	800,000 e^-		
Non-linearity (measured at all speeds per camera)	< 0.75%		
Readout Noise (e^-): Typ. (Max)	**50 kHz**	**1 MHz**	**3 MHz**
High Sensitivity mode: EM off	2.7 (5)	6.1 (9)	8.5 (12)
Electron Multiplying mode: EM off	8.0 (15)	23 (35)	38 (50)
Electron Multiplying mode: EM on	< 1	< 1	< 1
Dark Current at −60°C (e^-/pixel/s)			
FI	< 0.002		
BI	< 0.01		
Maximum spectra per second			
Full vertical bin	616		376
ROI mode 20 rows	1475		1475
ROI mode 8 rows	1613		1613
Software-adjustable gain (e^-/count)			
High Sensitivity mode	Selectable from 0.6 to 4.0		
Electron Multiplying mode	Selectable from 3.6 to 25		
Electron multiplier gain	1 to 1000, software-controlled		
Digitization	16-bit ADC		
Vertical shift rates	4.9, 9.6, 19 software-selectable(4)		
Cooling at +20°C			
Air-cooled	−60°C (guaranteed)		
Liquid-cooling recirculator	−75°C (typical)		
Power requirements			
AC-DC power supply (provided)	AC input 90–264 VAC, 47–63 Hz DC output +9 V, 6.44 A maximum		

(1) Region Of Interest (ROI) mode one row
(2) Measured at -60°C
(3) Measured at all read-out speeds for each camera
(4) Some decrease in CTE may be observed at faster speeds.

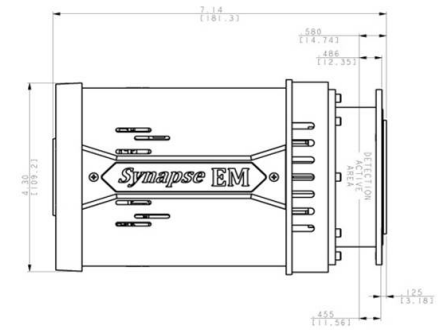

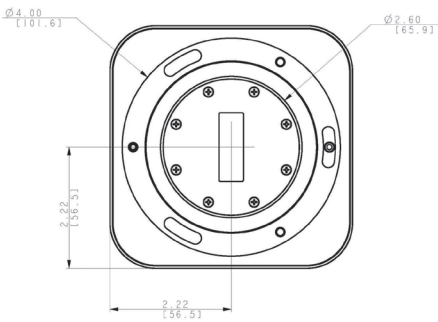

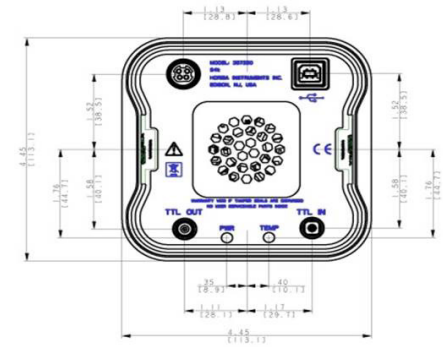

JOBIN YVON Technology

Your partner for Spectroscopy Solutions

Spectrometers, Monochromators
Scientific Cameras, Software and
Custom Solutions

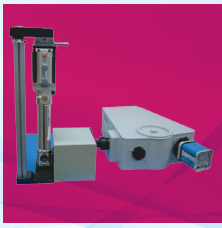

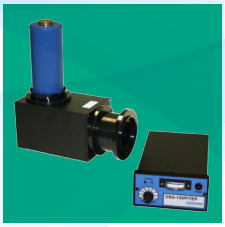
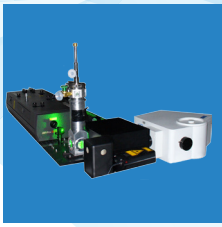

HORIBA Scientific

info.sci@horiba.com
www.horiba.com/scientific

USA: +1 732 494 8660
UK: +44 (0)20 8204 8142
China: +86 (0)21 6289 6060
France: +33 (0)1 69 74 72 00
Italy: +39 2 5760 3050
Brazil: +55 (0)11 5545 1500
Germany: +49 (0)89 4623 17-0
Japan: +81 (0)3 6206 4721
Other: +1 732 494 8660

Explore the future
Automotive Test Systems | Process & Environmental | Medical | Semiconductor | Scientific
HORIBA

北 方 广 微

GWIR Uncooled Infrared Cores

GW5.0 030221A

- Type:VOx Uncooled infrared LWIR (Made in China)
- Array format and Pixel-pitch: 640x512/20μm
- Spectral response:8～14μm
- Power consumption:≤2W @25℃
- Power supply:DC 5V~13V
- Time to image:≤20s
- Operating temperature range:-40℃~+60℃
- Storage temperature range:-50℃~+70℃
- NETD:≤70mk (@f/1 , 25 Hz)
- Focus motor driver: DC 6V～Input power voltage
- Size:≤49mm×46mm×45mm (Include shutter motor)
- Weight:≤100g (including block slice motor and heat dissipation structure)
- Video output: Analog Video output, PAL formats
- Digital output(optional): LVDS output(8bit gray-scale data)
- Communication mode: Rs232 serial port,one
- Main control function: Manual background calibration, Manual shutter calibration, Polarity setting, 2×Digital Zoom, Cross display, Image enhancement adjustment, Image brightness adjustment, Cross position adjustment, Focus Motor Control, System parameter reset

www.gwic.com.cn

North Guangwei technology INC.

16/F , North Real Estate Building,No.81,ZiZhuYuan Road,HaiDian District,Beijing , PRC

Tel:+86 10 88829628 Fax:+86 10 88829622 Zip:100089

北方广微

GWIR 非制冷红外机芯

「GW5.0 030221A」

- 探测器:广微积电氧化钒非制冷焦平面探测器（国产）
- 探测器参数:640×512，20μm
- 工作波段:8～14μm
- 功耗:≤2.5W @25℃
- 供电范围:DC 5V～13V
- 启动时间:≤20s
- 工作温度:-40℃ ～ +60℃
- 存储温度:-50℃ ～ +70℃
- NETD:≤70mk（@f/1，25HZ）
- 调焦电机驱动:DC 6V～Input Power voltage
- 尺寸:≤49mm×46mm×45mm 包含挡片电机和结构件)
- 重量:≤100g(包含挡片电机和散热结构件）
- 视频输出:模拟视频输出(PAL制式）
- 数字输出(选配):LVDS输出(8bit灰度数据）
- 通讯方式:1路 RS232串口
- 主要控制功能:手动背景校正、手动快门校正、极性设置、2倍电子放大、十字叉显示、图像增益调节、图像亮度调节、十字叉位置调节、图像增强、电动调焦、系统参数复位。

www.gwic.com.cn

北方广微科技有限公司
North Guangwei technology INC.
公司地址：北京市海淀区紫竹院路81号 北方地产大厦16层
联系电话：010-88829628　传真：010-88829622　邮编：100089

北 方 广 微

GWIR Passive Vehicle Night-Vision

- Material:VOx
- Array format and Pixel-pitch: 384x288/25μm
- NETD:60mk@1/f,300K,25Hz
- Calibration technique: Automatic nonuniformity calibration
- Image noise reduction:Digital filtering
- Image enhancement: Dynamic adaptive enhancement
- Display output:RBT656 800 480(PAL)
- Polarity:White hot
- Working voltage:DC+12V
- Power consumption:3.5W , 25℃
- Working temperature:-40℃ ~ +60℃
- Storage temperature:-55℃ ~ +70℃
- Field of view (FOV) : 29°(HFOV)X21°(HFOV)
- Detection range: Pedestrian for 500m, Vehicle for 1000m

www.gwic.com.cn

North Guangwei technology INC.

16/F , North Real Estate Building,No.81,ZiZhuYuan Road,HaiDian District,Beijing , PRC

Tel:+86 10 88829628 Fax:+86 10 88829622 Zip:100089

北 方 广 微

GWIR 被动式红外车载夜视仪

- 传感器材料:VOx
- 探测器参数:384x288/25μm
- NETD:60mk@1/f,300K,25Hz
- 校正技术:自动非均匀性校正
- 图像降噪:数字滤波
- 图像增强:动态自适应增强
- 图像输出: RBT656 800 480(PAL制)
- 极性:白热
- 工作电压:DC+12V
- 功耗:3.5W（常温25℃）
- 工作温度范围:-40℃～+60℃
- 存储温度范围:-50℃～+80℃
- 视场角:29°(HFOV)X21°(HFOV)
- 探测距离:行人500米 车辆1000米

www.gwic.com.cn

北方广微科技有限公司
North Guangwei technology INC
公司地址：北京市海淀区紫竹院路81号 北方地产大厦16层

北 方 广 微

GWIR Uncooled Infrared Detector

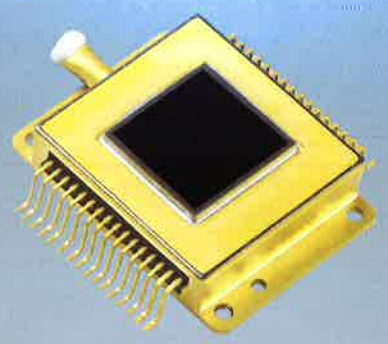

GWIR 0203X1A

- Material:VOx
- Array format:384×288
- Pixel-pitch:20μm
- NETD (@1/f , 300K , 50Hz)50mK / 80mK
- Area fill factor:70%
- Spectral response:8～14μm
- Thermal time constant:15ms
- Non-operating pixel:<0.3%
- Typical signal response:12mV/K
- Frame rate (Max):60Hz
- Dynamic range:≥70db
- Output signal:One analog output
- Power consumption (excluding
- TEC):200mW
- Operating temperature range: -40℃～+60℃
- Storage temperature range: -55℃～+70℃
- Weight:25g

*Note : we can supply different levels of NETD detectors according to the customers' demand. 'X' in the product model GWIR 02 03 X1A represents the NETD level of the detector.

www.gwic.com.cn

North Guangwei technology INC.

16/F , North Real Estate Building,No.81,ZiZhuYuan Road,HaiDian District,Beijing , PRC

Tel:+86 10 88829628 Fax:+86 10 88829622 Zip:100089

北 方 广 微

GWIR 非制冷红外探测器

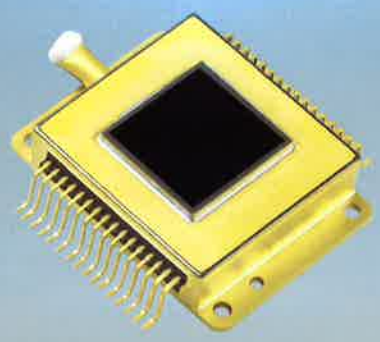

GWIR 0203X1A

- 传感器材料:VOx
- 面阵分辨率:384x288
- 像元中心距:20μm
- NETD (@1/f，300K，50Hz)50mK /80mK
- 填充系数:70%
- 响应波段:8-14μm
- 典型热响应时间:15ms
- 盲元率: <0.3%
- 典型响应率:12mV/K
- 最大帧频:60Hz
- 动态范围:≥70db
- 输出信号:单通道模拟信号
- 典型功耗(不包括TEC功耗):200mW
- 工作温度范围:-40℃ ~ +60℃
- 储存温度范围:-55℃ ~ +70℃
- 重量:25g

*备注：厂家可以根据用户对性能和成本的要求提供不同级别NETD的探测器，产品型号GWIR0203X1A中的“X”代表了该探测器的NETD水平。

www.gwic.com.cn

北方广微科技有限公司
North Guangwei technology INC.
公司地址：北京市海淀区紫竹院路81号 北方地产大厦16层
联系电话：010-88829628　传真：010-88829622　邮编：100089

北 方 广 微

GWIR Uncooled Infrared Detector

GWIR 010222A

- Material:VOx
- Array format:160×120
- Pixel-pitch:38μm
- NETD(@1/f , 300K , 50Hz)≤80mK
- Area fill factor:70%
- Spectral response:8～14μm
- Thermal time constant:4ms
- Non-operating pixel:<0.1%
- Typical signal response:8mV/K
- Frame rate (Max):100Hz
- Dynamic range:≥70db
- Output signal:One analog output
- Power consumption (excluding TEC): 100mW
- Operating temperature range: -40℃～+60℃
- Storage temperature range: -55℃～70℃
- Weight:15g

www.gwic.com.cn

North Guangwei technology INC.

16/F , North Real Estate Building,No.81,ZiZhuYuan Road,HaiDian District,Beijing , PRC

Tel:+86 10 88829628 Fax:+86 10 88829622 Zip:100089

北 方 广 微

GWIR 非制冷红外探测器

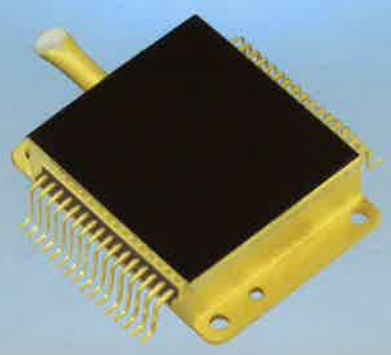

GWIR 010222A

- 传感器材料:VOx
- 面阵分辨率:160x120
- 像元中心距:38μm
- NETD
  (@1/f，300K，50Hz)≤80mK
- 填充系数:70%
- 响应波段:8-14μm
- 典型热响应时间:4ms
- 盲元率: <0.1%
- 典型响应率:8mV/K
- 最大帧频:100Hz
- 动态范围:≥70db
- 输出信号:单通道模拟信号
- 典型功耗(不包括TEC功耗):100mW
- 工作温度范围:-40℃ ~ +60℃
- 储存温度范围:-55℃ ~ +70℃
- 重量:15g

www.gwic.com.cn

北方广微科技有限公司
North Guangwei technology INC.
公司地址：北京市海淀区紫竹院路81号 北方地产大厦16层
联系电话：010-88829628　传真：010-88829622　邮编：100089

北 方 广 微

GWIR Uncooled Infrared Detector

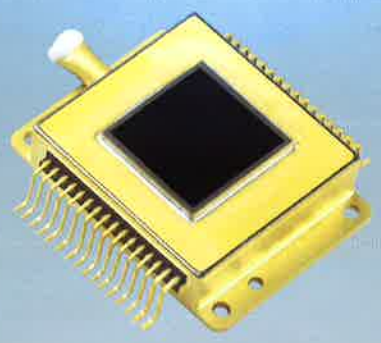

GWIR 0202X1A

- Material:VOx
- Array format:384×288
- Pixel-pitch:25μm
- NETD (@1/f , 300K , 50Hz)40mK / 60mK
- Area fill factor:70%
- Spectral response :8～14μm
- Thermal time constant:20ms
- Non-operating pixel :<0.3%
- Typical signal response:15mV/K
- Frame rate (Max):50Hz
- Dynamic range:≥70db
- Output signal:One analog output
- Power consumption (excluding TEC):200mW
- Operating temperature range: -40℃～+60℃
- Storage temperature range: -55℃～+70℃
- Weight:25g

*Note : we can supply different levels of NETD detectors according to the customers' demand. 'X' in the product model GWIR 02 02 X1A represents the NETD level of the detector.

www.gwic.com.cn

North Guangwei technology INC.

16/F , North Real Estate Building,No.81,ZiZhuYuan Road,HaiDian District,Beijing , PRC

Tel:+86 10 88829628 Fax:+86 10 88829622 Zip:100089

北方广微

GWIR 非制冷红外探测器

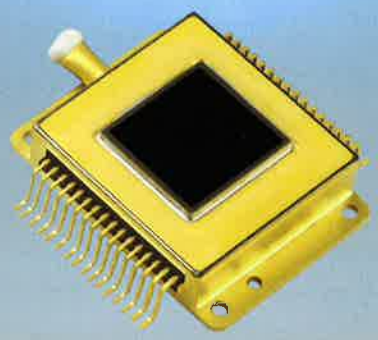

「GWIR 0202X1A」

- 传感器材料:VOx
- 面阵分辨率:384x288
- 像元中心距:25μm
- NETD (@1/f，300K，50Hz)40mK /60mK
- 填充系数:70%
- 响应波段:8-14μm
- 典型热响应时间:20ms
- 盲元率: <0.3%
- 典型响应率:15mV/K
- 最大帧频:50Hz
- 动态范围:≥70db
- 输出信号:单通道模拟信号
- 典型功耗(不包括TEC功耗):200mW
- 工作温度范围:-40℃ ~ +60℃
- 储存温度范围:-55℃ ~ +70℃
- 重量:25g

*备注：厂家可以根据用户对性能和成本的要求提供不同级别NETD的探测器，产品型号GWIR0202X1A中的“X”代表了该探测器的NETD水平。

www.gwic.com.cn

北方广微科技有限公司
North Guangwei technology INC.
公司地址：北京市海淀区紫竹院路81号 北方地产大厦16层

北 方 广 微

GWIR Uncooled Infrared Detector

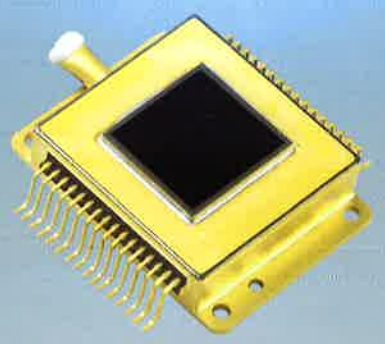

GWIR 010121A

- Material:VOx
- Array format:160×120
- Pixel-pitch:45μm
- NETD
  (@1/f , 300K , 50Hz)
  ≤80mK
- Area fill factor:70%
- Spectral response:8 ~ 14μm
- Thermal time constant:7ms
- Non-operating pixel:<0.1%
- Typical signal response:5mV/K
- Frame rate (Max):60Hz
- Dynamic range:≥70db
- Output signal:One analog output
- Power consumption(excluding TEC): 200mW
- Operating temperature range: -40℃ ~ +60℃
- Storage temperature range: -55℃ ~ +70℃
- Weight :25g

www.gwic.com.cn

North Guangwei technology INC.

16/F , North Real Estate Building,No.81,ZiZhuYuan Road,HaiDian District,Beijing , PRC

Tel:+86 10 88829628 Fax:+86 10 88829622 Zip:100089

北方广微

GWIR 非制冷红外探测器

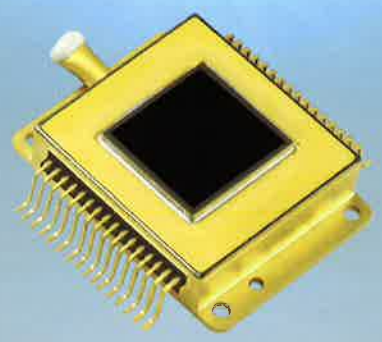

GWIR 010121A

- 传感器材料:VOx
- 面阵分辨率:160x120
- 像元中心距:45μm
- NETD (@1/f，300K，50Hz)≤80mK
- 填充系数:70%
- 响应波段:8-14μm
- 典型热响应时间:7ms
- 盲元率: <0.1%
- 典型响应率:5mV/K
- 最大帧频:60Hz
- 动态范围:≥70db
- 输出信号:单通道模拟信号
- 典型功耗(不包括TEC功耗):200mW
- 工作温度范围:-40℃ ~ +60℃
- 储存温度范围:-55℃ ~ +70℃
- 重量:25g

www.gwic.com.cn

北方广微科技有限公司
North Guangwei technology INC
公司地址：北京市海淀区紫竹院路81号 北方地产大厦16层

北 方 广 微

GWIR Uncooled Infrared Cores

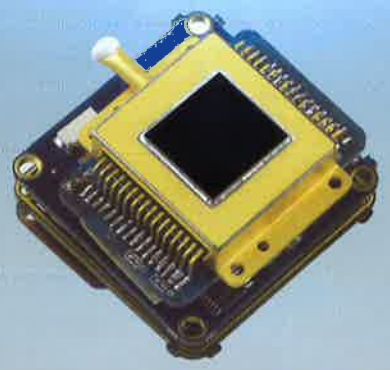

GW3.0 020231A

- Type:VOx Uncooled infrared LWIR
- Array format and Pixel-pitch: 384x288/25μm
- NETD:60Mk@1/f , 300K , 25Hz
- Calibration Techniques: Automatic non-uniform correction
- Image Denoising:Digital filter
- Image Enhancement: Self-adapting dynamic
- Image Output:RBT 656 800X480 (PAL)
- Polarity:White hot
- Working voltage:DC+12V
- Power consumption:≤3.5W (normal temperature 25℃)
- Operating temperature range: -40℃~+60℃
- Storage Temperature range: -50℃~+80℃

www.gwic.com.cn

North Guangwei technology INC.

16/F , North Real Estate Building,No.81,ZiZhuYuan Road,HaiDian District,Beijing , PRC

Tel:+86 10 88829628 Fax:+86 10 88829622 Zip:100089

北方广微

GWIR 非制冷红外机芯

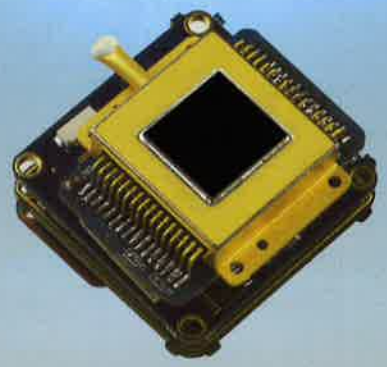

「GW3.0 020231A」

- 探测器类型:VOx非制冷红外焦平面
- 探测器参数:384x288/25μm
- NETD:60Mk@1/f,300K,25Hz
- 校正技术:自动非均匀校正
- 图像降噪:数字滤波
- 图像增强:动态自适应增强
- 图像输出:RBT 656 800X480 (PAL制)
- 极性:白热
- 工作电压:DC+12V
- 功耗:≤3.5W（常温25℃）
- 工作温度:-40℃~+60℃
- 存储温度:-50℃~+80℃

www.gwic.com.cn

北方广微科技有限公司
North Guangwei technology INC.
公司地址：北京市海淀区紫竹院路81号 北方地产大厦16层
联系电话：010-88820628 传真：010-88820622 邮编：100089

北 方 广 微

GWIR Uncooled Infrared Detector

GWIR 0302X1A

- Material:VOx
- Array format:640×512
- Pixel-pitch:20μm
- NETD
  (@1/f , 300K , 50Hz) 50mK/80mK
- Area fill factor:70%
- Spectral response:8～14μm
- Thermal time constant:15ms
- Non-operating pixel:<0.1%
- Typical signal response:12mV/K
- Frame rate (Max):50Hz
- Dynamic range:≥70db
- Output signal:Two analog output
- Power consumption(excluding TEC): 300mW
- Operating temperature range: -40℃～+60℃
- Storage temperature range: -55℃～+70℃
- Weight:25g

*Note : we can supply different levels of NETD detectors according to the customers' demand. 'X' in the product model GWIR 03 02 X1A represents the NETD level of the detector.

www.gwic.com.cn

North Guangwei technology INC.

16/F , North Real Estate Building,No.81,ZiZhuYuan Road,HaiDian District,Beijing , PRC

Tel:+86 10 88829628 Fax:+86 10 88829622 Zip:100089

北 方 广 微

GWIR 非制冷红外探测器

GWIR 0302X1A

- 传感器材料:VOx
- 面阵分辨率:640x512
- 像元中心距:20μm
- NETD (@1/f，300K，50Hz)50mK /80mK
- 填充系数:70%
- 响应波段:8-14μm
- 典型热响应时间:15ms
- 盲元率: <0.1%
- 典型响应率:12mV/K
- 最大帧频:50Hz
- 动态范围:≥70db
- 输出信号:双通道模拟信号
- 典型功耗(不包括TEC功耗):300mW
- 工作温度范围:-40℃ ~ +60℃
- 储存温度范围:-55℃ ~ +70℃
- 重量:25g

*备注：厂家可以根据用户对性能和成本的要求提供不同级别NETD的探测器，产品型号GWIR0302X1A中的“X”代表了该探测器的NETD水平。

www.gwic.com.cn

北方广微科技有限公司
North Guangwei technology INC
公司地址：北京市海淀区紫竹院路81号 北方地产大厦16层
联系电话：010-88829628　传真：010-88829622　邮编：100089

北 方 广 微

GWIR Uncooled Infrared Detector

GWIR 0201X1A

- Material:VOx
- Array format:384×288
- Pixel-pitch:35μm
- NETD (@1/f , 300K , 50Hz)60mK / 80mK
- Area fill factor:70%
- Spectral response:8～14μm
- Thermal time constant:15ms
- Non-operating pixel:<0.1%
- Typical signal response:10mV/K
- Frame rate (Max):60Hz
- Dynamic range:≥70db
- Output signal:One analog output
- Power consumption (excluding TEC):200mW
- Operating temperature range: -40℃～+60℃
- Storage temperature range: -55℃～+70℃
- Weight:25g

*Note : we can supply different levels of NETD detectors according to the customers' demand. 'X' in the product model GWIR 02 01 X1A represents the NETD level of the detector.

www.gwic.com.cn

North Guangwei technology INC.

16/F , North Real Estate Building,No.81,ZiZhuYuan Road,HaiDian District,Beijing , PRC

Tel:+86 10 88829628 Fax:+86 10 88829622 Zip:100089

北 方 广 微

GWIR 非制冷红外探测器

「GWIR 0201X1A」

- 传感器材料:VOx
- 面阵分辨率:384x288
- 像元中心距:35μm
- NETD (@1/f，300K，50Hz)60mK /80mK
- 填充系数:70%
- 响应波段:8-14μm
- 典型热响应时间:15ms
- 盲元率: <0.1%
- 典型响应率:10mV/K
- 最大帧频:60Hz
- 动态范围:≥70db
- 输出信号:单通道模拟信号
- 典型功耗(不包括TEC功耗):200mW
- 工作温度范围:-40℃ ~ +60℃
- 储存温度范围:-55℃ ~ +70℃
- 重量:25g

*备注：厂家可以根据用户对性能和成本的要求提供不同级别NETD的探测器，产品型号GWIR0201X1A中的“X”代表了该探测器的NETD水平。

www.gwic.com.cn

北方广微科技有限公司
North Guangwei technology INC.
公司地址：北京市海淀区紫竹院路81号 北方地产大厦16层
联系电话：010-88829628　传真：010-88829622　邮编：100089

北 方 广 微

GWIR Uncooled Infrared Cores

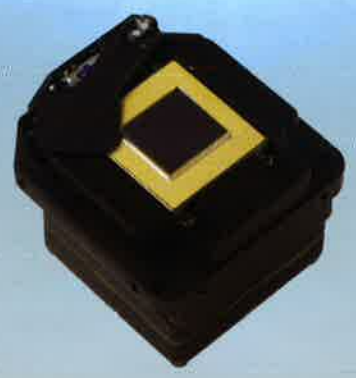

GW5.0 020221A

- Type:VOx Uncooled infrared LWIR (Made in China)
- Array format and Pixel-pitch: 384x288/25μm
- Spectral response:8～14μm
- Power consumption:≤2W @25℃
- Power supply:DC 5.5V~13V
- Time to image:≤20s
- Operating temperature range:-40℃~+60℃
- Storage temperature range:-50℃~+70℃
- NETD:≤60mk@f/1 , 25Hz
- Focus motor driver: DC 6V～Input power voltage
- Video output: Analog Video output, PAL formats
- Communication mode: Rs232 serial port,one
- Main control function: Manual background calibration, Manual shutter calibration, Polarity setting, 2×Digital Zoom, Cross display, Image enhancement adjustment, Image brightness adjustment, Cross position adjustment, Focus Motor Control, System parameter reset
- Size:≤49mm×46mm×45mm (Include shutter motor)
- Weight:≤100g (including block slice motor and heat dissipation structure)

www.gwic.com.cn

North Guangwei technology INC.

16/F , North Real Estate Building,No.81,ZiZhuYuan Road,HaiDian District,Beijing , PRC

Tel:+86-10-88829628 , Fax:+86-10-88829622 , Zip:100089

北方广微

GWIR 非制冷红外机芯

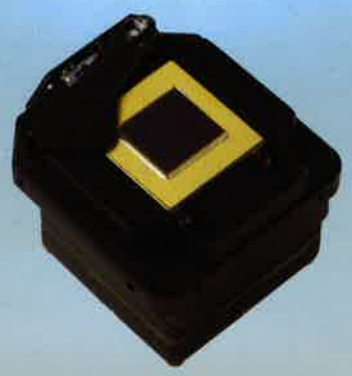

GW5.0 020221A

- 探测器:广微积电氧化钒非制冷焦平面探测器(国产)
- 探测器参数:384×288,25μm
- 工作波段:8~14um
- 功耗:≤2W @25℃
- 供电范围:DC 5.5V~13V
- 启动时间:≤20s
- 工作温度:-40℃~ +60℃
- 存储温度:-50℃~ +70℃
- NETD:≤60mk(@f/1,25℃)
- 调焦电机驱动:DC 6V~Input Power voltage
- 视频输出:模拟视频输出,PAL制式
- 通讯方式:1路 RS232串口
- 主要控制功能:手动背景校正、手动快门校正、极性设置、2 倍电子放大、十字叉显示、图像增益调节、图像亮度调节、十字叉位置调节、图像增强、电动调焦、系统参数复位。
- 尺寸:≤49mm×46mm×45mm(包含挡片电机和结构件)
- 重量:≤100g(包含挡片电机和散热结构件)

www.gwic.com.cn

北方广微科技有限公司
North Guangwei technology INC.
公司地址：北京市海淀区紫竹院路81号 北方地产大厦16层

Hercules MWIR Video Engine

The Hercules Video Engine is a Mega-Pixel MWIR engine designed for imaging payloads providing high definition thermal imaging. The engine resolution is 1280x1024 with a 15um pixel size and is compatible with F/5.5 optics (other apertures are available on request).

Main Features:

- 3.8" x 3.8" x 5.9" open frame envelope
- <25mK NETD
- HD-SDI or component video and Camlink digital output
- 60fps nominal at full 1280x1024 window size (higher rates with windowing)
- Various OEM Configurations available upon request

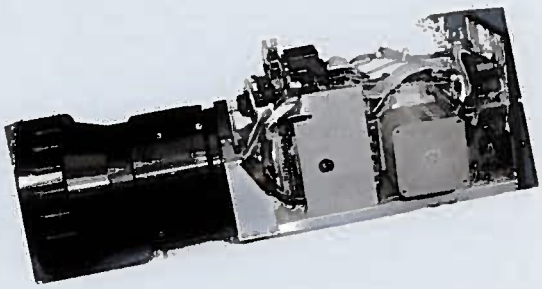

Mechanical Dimensions:

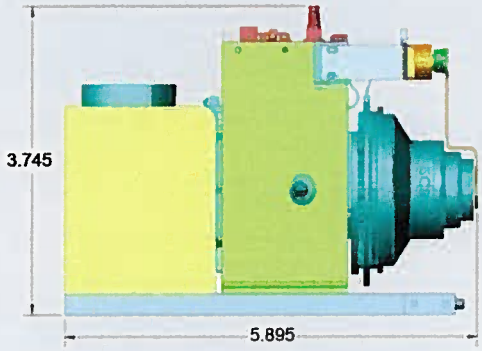

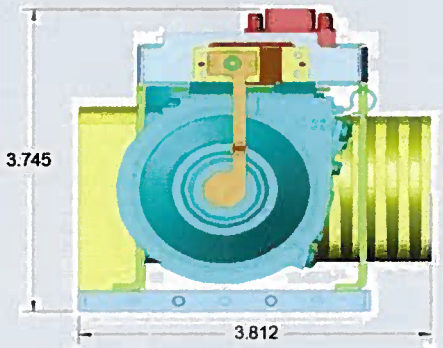

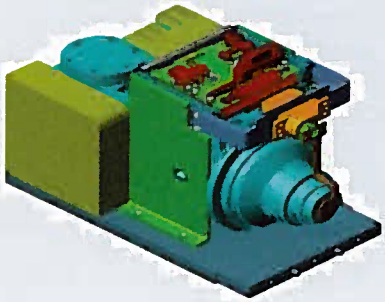

SCD. USA, LLC 4325 Woodland Park Drive, Suite #104, Melbourne, FL 32904 USA
Phone: (321) 724-6146 Toll-free: (866) 9SCDUSA (972-3872) Fax: (321) 724-6267
E-mail: contactus@scdusa.com Web site: www.scdusa.com

Typical Specifications:

Parameter	Values	Notes
Format	1280x1024	
Pixel size	15um	
Material	InSb	
Detector Temperature	77K	
Wavelength	3.6 - 4.9um	
F/#	F/5.5	Others available on request
Cold Shield Height	28mm	Other available on request
NETD	<25mK	
Well Capacity	1.5Me- and 5.8Me-	
Operability	>99.5%	
Time to Cool Down	<8min @ 23C	
Weight	<1000g	Includes IDDCA with associated electronics and cooler controller
Power Consumption	< 16W Steady State	
Digital Display Video	HD-SDI	
Analog Display Video	Component	
Digital Data Streaming	Camlink Base	GigE Optional
Command and Control	RS232C, RS422 and Camlink COM	GigE Optional
Sync Modes	Internal/External Sync and Clock	
Nominal Frame Rate	59.94Hz on digital data stream	
NUC Tables	Up to 3	
Lens-Direct Technology	Optional Native Support for Motorized Focus or Continuous Zoom Lenses	
LACE/LAP	"Optimal" Process / User Adjustable	Local Area Contrast Enhancement/ Local Area Processing
AGC/ALC	Full Manual, ROI Linear, ROI Histogram	
Digital Zoom	2x or 4X Edge Preserving	
Operating Temperature	-40C to 71C	
Power Input	24VDC	

SCD USA
SEMI CONDUCTOR DEVICES USA

Specifications are subject to change without notice.

PRODUCT SHEET

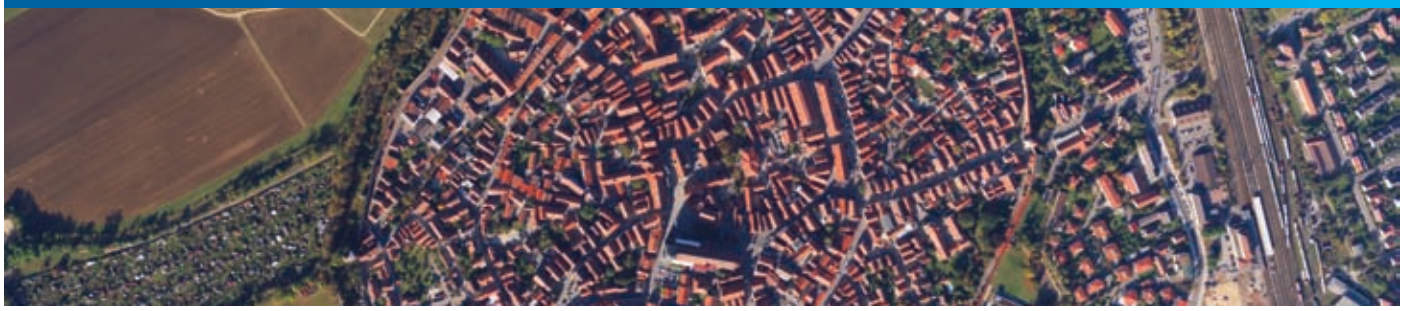

DMC® II_{250} CAMERA SYSTEM

LARGE-FORMAT DIGITAL CAMERA INCLUDES FIVE CAMERA HEADS

Intergraph® is a world leader in providing photogrammetric solutions that support all your earth imaging requirements, from data acquisition to exploitation and data distribution. Our Digital Mapping Camera (DMC®) is the industry's most innovative turnkey large-format digital camera system. We developed the medium-format RMK D™ so more organizations can take advantage of the most advanced imaging technology available. Now, Intergraph offers the DMC II_{250}, the first large-format digital aerial camera that uses a single monolithic camera (Figure 1) head to produce extreme wide-ground coverage (Figure 2).

ONE SINGLE PAN CONE – ONE LARGE CCD

The DMC II_{250} includes one large 17.2k x 14.6k charge-coupled device (CCD), exclusively customized by DALSA for Z/I Imaging®'s digital camera technology. The DMC II_{250} camera design is an evolution of the proven DMC camera technology and includes a new customized lens design by Carl Zeiss, Germany, to produce an unmatched level of high-image quality.

The single monolithic PAN camera head achieves the ultimate design goal for digital aerial camera development with one single lens for large ground coverage, the basic optics design principle for all film cameras for many decades. By eliminating potential sources of errors for geometric accuracy and radiometric quality, this new approach delivers images that exceed your requirements for all mapping and remote sensing tasks. Fundamental design characteristics include a nadir-looking view and a single-lens projection center. The DMC II_{250} image data post-processing does not require CCD stitching or image mosaicking.

ADVANCED DESIGN

The DMC II_{250} is based on the DMC II camera family design. It includes five nadir-looking camera heads – four multispectral cameras for red, green, blue, (RGB) and near-infrared (NIR), and a fifth high-resolution PAN camera head. Each multispectral camera has a 42 MPixel CCD (6846 x 6096 pixel) with 7.2 micron pixel size and a dedicated color filter. The focal length for the multispectral cameras is 45 millimeters (mm).

Each camera head uses a unique piezo-driven customized airborne shutter that performs automatic self-calibration. This also ensures maximum synchronous behavior during the exposure cycle for all five camera heads.

The PAN camera includes a 250 MPixel CCD (17216 x 14656 pixel) with 5.6 micron pixel size and 112 mm focal length. The PAN camera has an infrared cut-off filter to remove the spectral wave length beyond 710 nm.

INCREASED PERFORMANCE

Our DMC II_{250} is a high-performance digital camera system. It has a 1.7 second frame rate to maintain high-air speed for high-forward overlap and high resolution (at 80 percent forward overlap and 5 centimeter [cm] ground sample distance [GSD], maximum air speed is 168 knots). The PAN/color ratio of 1:3.2 provides high-radiometric quality images for RGB and color-infrared (CIR). The long focal length and small pixel size delivers high-resolution image data 10 cm (3.9 inch) GSD at 6562 feet (2000 meters) above ground level. A strong base-to-height ratio of 0.29 provides excellent stereo measurement accuracy. The nadir-looking monolithic PAN camera offers unmatched radiometric and geometric quality.

IMAGE DATA POST-PROCESSING

Image data post-processing for DMC II_{250} is based on the DMC post-processing software. Development has implemented the DMC II_{250} sensor model. The user interface is unchanged, which eliminates any training effort for existing DMC customers. Final image format after post-processing is 17216 x 14656 pixels.

MODULAR AND COMPATIBLE

DMC II_{250} is compatible with all existing peripheral devices used for RMK TOP, DMC, and RMK D, which include Z/I Mission planning software, Z/I Inflight sensor management system, solid state disks (SSD) storage cartridges, Readout Station, T-AS mount and Z/I Mount. In addition, a new adapter plate for the new generation of Z/I Imaging cameras allows you to use a wide range of different inertial measurement unit (IMU) sensors. You can easily upgrade your RMK D into a DMC II_{250} by installing the PAN camera head.

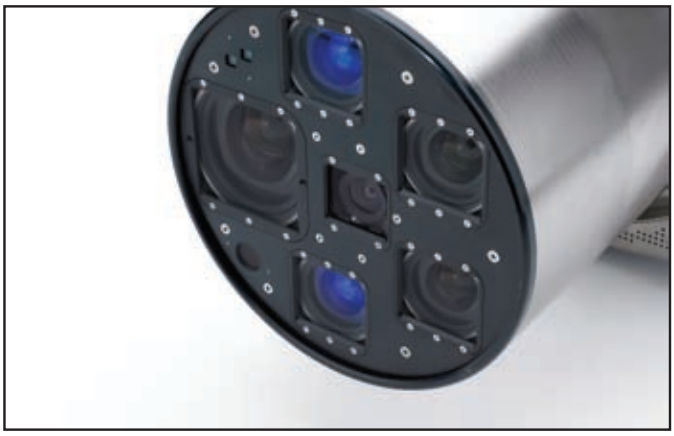

Figure 1: The DMC II camera design is an evolution of the proven DMC camera technology.

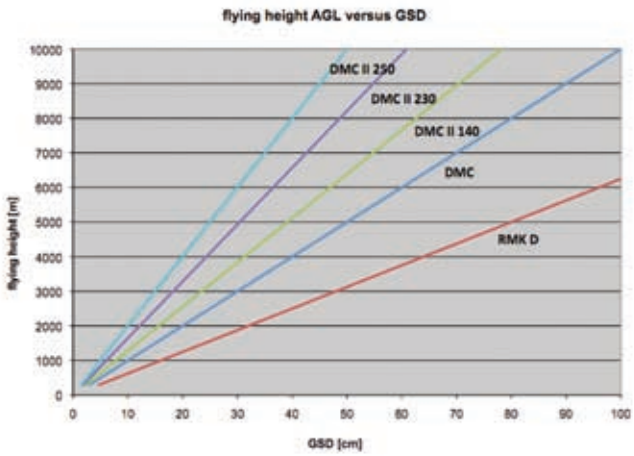

Figure 2: This chart compares flying height to ground sample distance (GSD).

DMC II $_{250}$ Technical Specifications		
Feature	Value	Comment
Pixel across track (1)	17216	
Pixel along track (1)	14656	
Fov across track	46.6 °	
Fov along track	40.2 °	
Focal length	112 mm	
Gsd@500m	2.5 cm	
B/h	0.29	
Pixel size	5.6 µm	
Number of camera heads	5	
Pan : color resolution	1:3,2	
Frame rate	1.7 sec	PAN 16 read-outs, MS 2 readouts
Color channels	R,G,B, NIR	
Resolution per pixel	14 bit	
Fmc	yes	via TDI
Ccd dynamic range	>67 dB	
Onboard storage	1.5 Tbyte	1350 images
Weight	66 kg	Including storage
Power consumption	350 W	Including storage
Altitude non-pressurized	8000 m	
Operating temperature	-20°C - 40°C	(Electronic inside the aircraft : 0° - 40° C)
	(1) Number of pixels of the processed image	

ABOUT INTERGRAPH

Intergraph is the leading global provider of engineering and geospatial software that enables customers to visualize complex data. Businesses and governments in more than 60 countries rely on Intergraph's industry-specific software to organize vast amounts of data into understandable visual representations and actionable intelligence. Intergraph's software and services empower customers to build and operate more efficient plants and ships, create intelligent maps, and protect critical infrastructure and millions of people around the world.

Intergraph operates through two divisions: Process, Power & Marine (PP&M) and Security, Government & Infrastructure (SG&I). Intergraph PP&M provides enterprise engineering software for the design, construction, and operation of plants, ships, and offshore facilities. Intergraph SG&I provides geospatially powered solutions to the defense and intelligence, public safety and security, government, transportation, photogrammetry, utilities, and communications industries.

For more information, visit www.intergraph.com.

INTERGRAPH®

Intergraph, the Intergraph logo, DMC, and Z/I Imaging are registered trademarks of Intergraph Corporation. RMK D is a trademark of Intergraph Corporation. Other brands and product names are trademarks of their respective owners. ©2010 Intergraph Corporation. 3/10 PHO-US-0025A-ENG

RICOR
CRYOGENIC & VACUUM SYSTEMS

K508

INTEGRAL STIRLING 1/2W MICRO COOLER

The K508 microcooler design model is solidly based on the concepts of direct detector mounting on the cooler's cold finger, and the integral construction of the cooler and Dewar envelope. Operation of the integral Stirling microcooler, driven by a DC brushless motor, is clean, silent and highly reliable. Model K508 has been in service since 1994. Over 70,000 coolers have been fielded and operate reliably onboard numerous ground, airborne, heliborne, naval and space applications. The K508 contains an onboard temperature controller, which offers standby, remote shutdown and over-temperature /over-current protection options. By adopting various types of Dewar envelopes, this microcooler can meet the cooling demands of most advanced IR detectors.

www.ricor.com

RICOR
CRYOGENIC & VACUUM SYSTEMS

DETECTORS
Small Format Array
Mid Format Array
Large Format Array
Scan Lines TDI

APPLICATIONS
Hand Held Thermal Imagers
Missile Warning Systems
Thermal Weapon Sights
Border Surveillance
UAVs
Field Observations
Observation Payloads
IR Search and Track
Space
Airborne EVS
Thermography
Fire Control Systems - AFV / MBT
Gas Leak Detection
FTIR
Non Destructive Testing

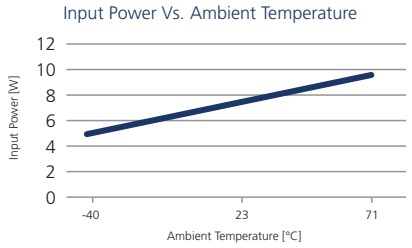

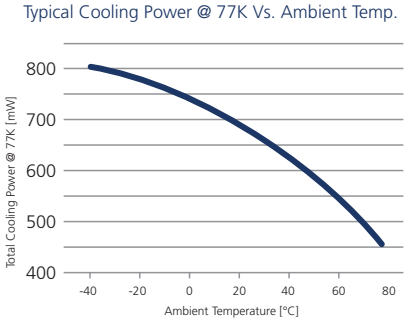

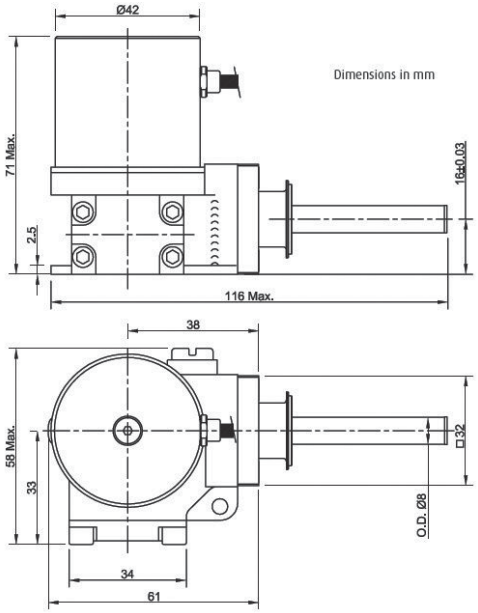

SPECIFICATIONS

- Cooler Weight: 450 gr.
- Input Voltage: 12-16V or 18-28V
- Steady State Input Power: 7Wdc@220mW, 77K
- Maximum Input Power: 17WDC
- Ambient Temperature Range:
  - Operational: -40°C...+85°C
  - Non-Operational: -56°C...+85°C
- Cooldown Time (250J @77K @23°C): 5 min. Typ.
- MTTF > 10,000 Hours
- Meets Environmental Conditions per MIL-STD-810

Specifications are subject to changes without prior notice.

CONTACTS

RICOR
Cryogenic & Vacuum Systems

En Harod Ihud 18960, Israel.
Tel. 972-4-6530800
Fax. 972-4-6532424
E-mail: marketing@ricor.com

ELECTRO-OPTICAL OBSERVATION STATION (EOOS)

«OSDCAM 4060 и 3660»

MAIN INNOVATIVE PRICIPLES

1. Matrix frame sensor with progressive scan
2. Mosaic field of view synthesis (multi-lens, multi-matrix)
3. Using small fast aperture optics with high resolution
4. Digital display synthesis, equivalent to a central projection frame
5. Hardware implementation of the data formation algorithm

ACHIEVING CONTINUOUS FRAME DUAL LENS MODULE

1 – CCD array holder with electronics (card);

2 – CCD arrays A,B,C,D;

3 – matrix holders;

4 – lenses (pair);

5 – united field display frame ABCD;

aa, bb – optical axis of lens pair;

cc –equivalent optical axis

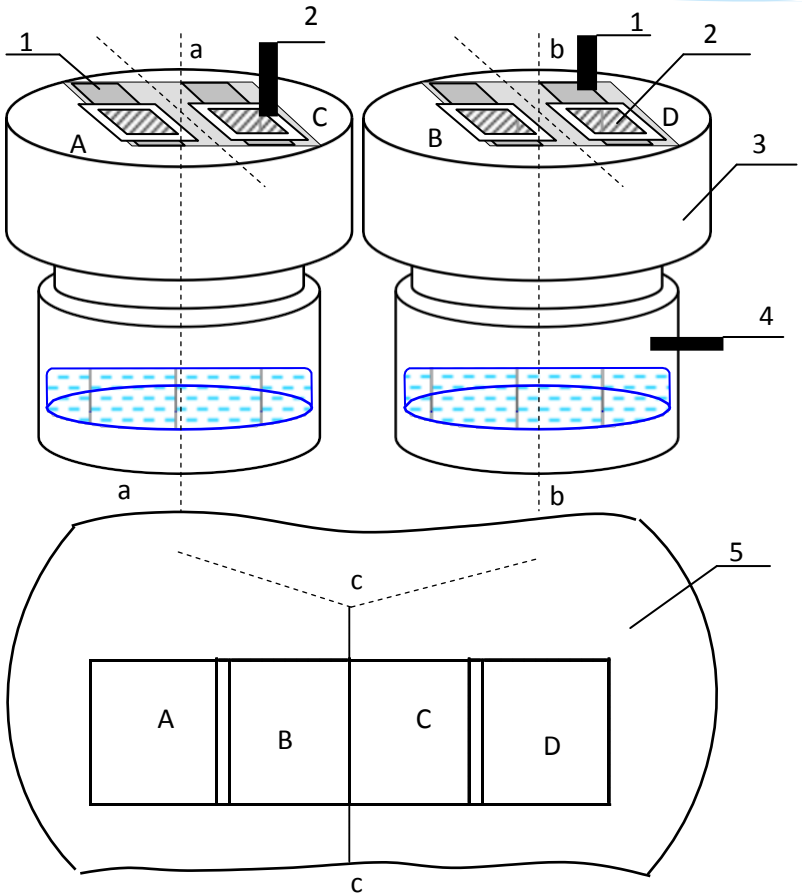

FORMATION OF OUTPUT DISPLAY FRAME

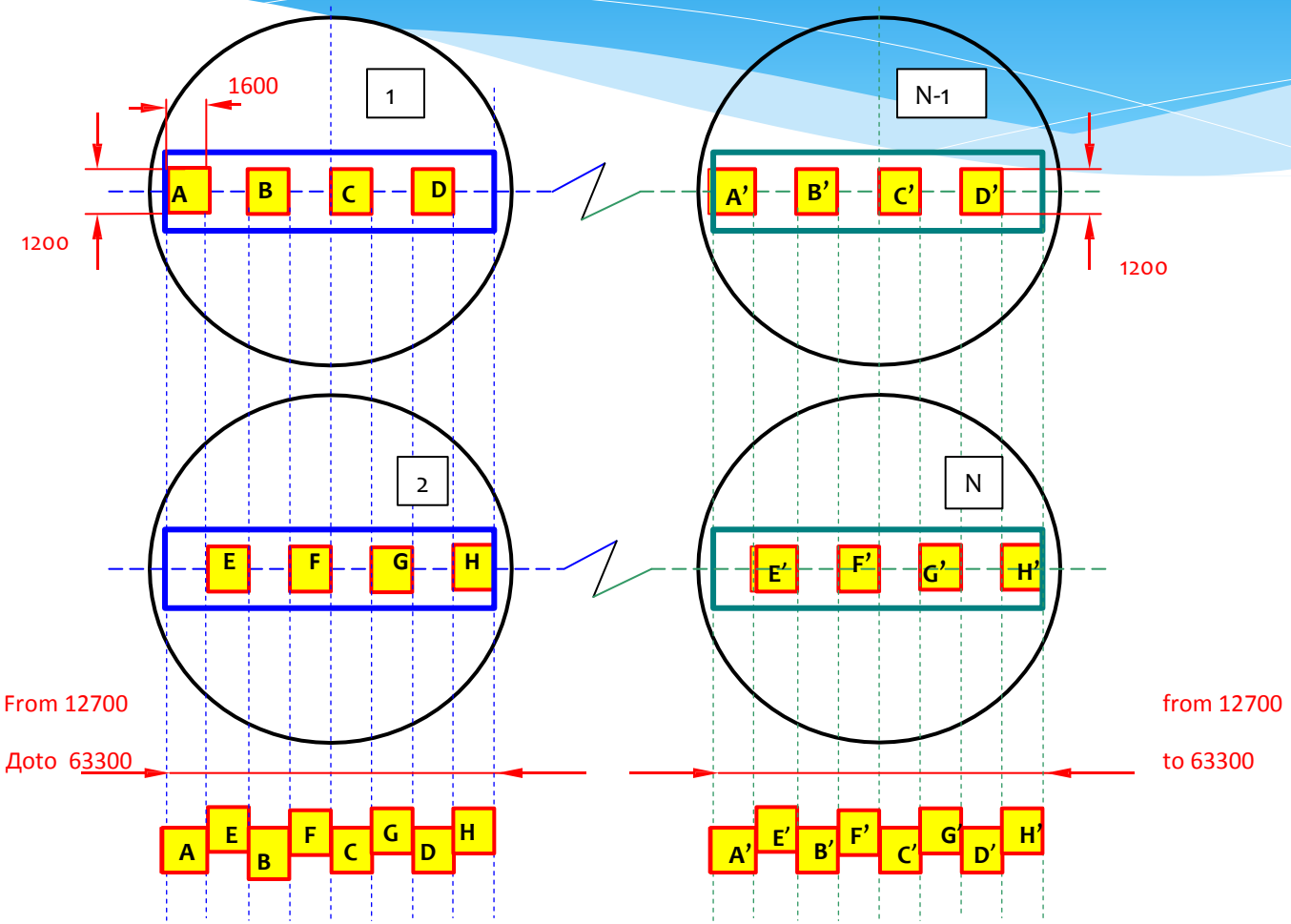

MAIN TECHNICAL STAGES FOR RECEIVING OBSERVATIONAL DATA

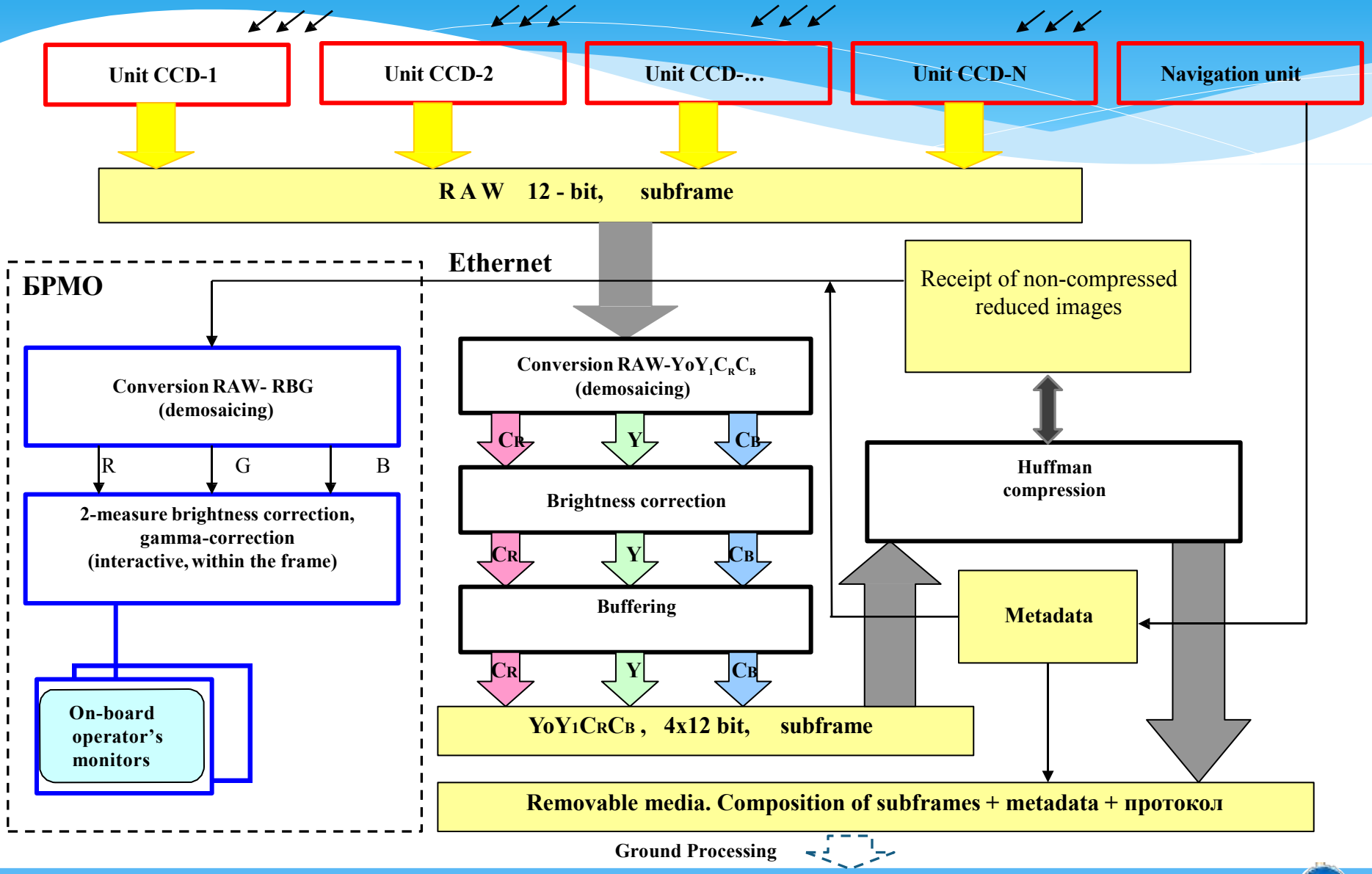

EOOS «OSDCAM 4060»
(VIEW FROM LENS SIDE)

High-altitude channel

10 lenses F100 mm in 3 matrix

Mid-altitude channel

18 lenses F50 mm in 1 matrix

Low-altitude channel

6 lenses F16 mm in 1 matrix

Low-altitude IR channel

6 lenses F16 mm in 1 matrix

EOOS «OSDCAM 4060»
(VIEW FROM ELECTRONICS SIDE)

Removable FLASH-storage
1.2-2.4 TB up to
400 MB/S

External interface module
(Gigabit Ethernet)

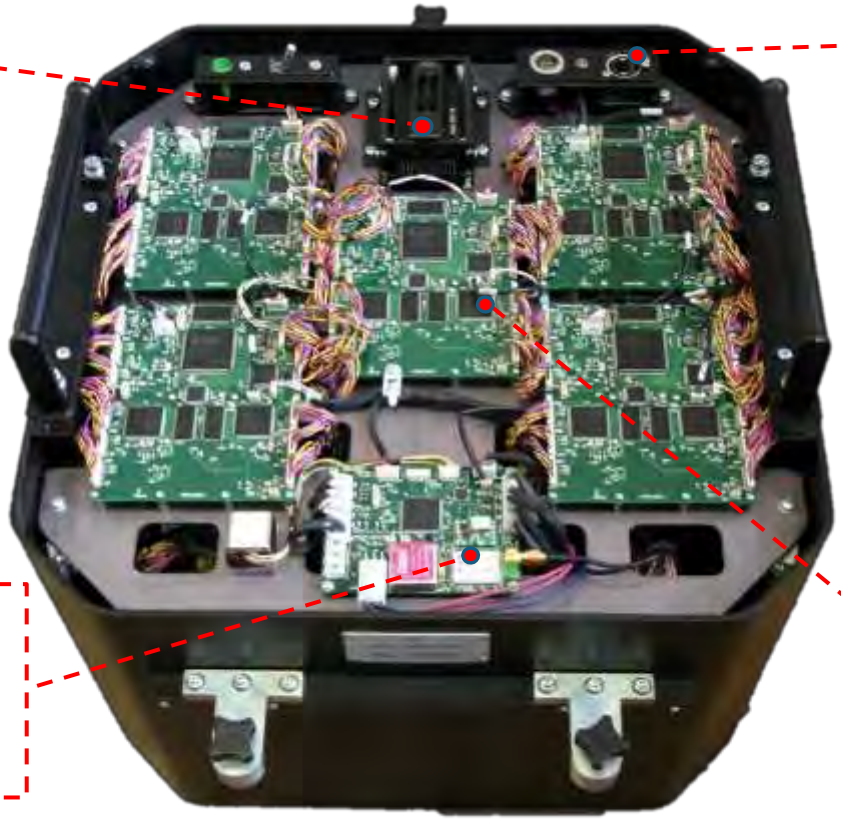

GPS/Glonas Navigation module and GINM on basis of micromechanical gyroscope

Digital processing and raster compression module (5)

EOOS «OSDCAM 4060»
(VIEW FROM TECHNICAL CONNECTIONS SIDE)

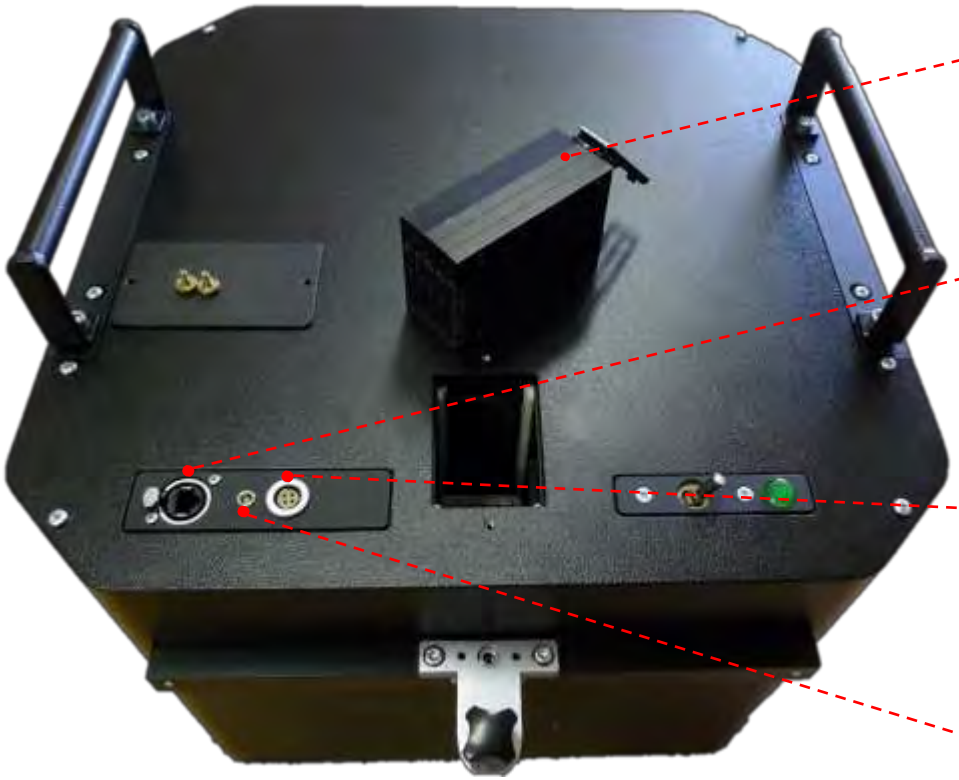

REMOVABLE SOLID STATE DATA DRIVE

Volume 1.2-2.4 TB
Speed up to 400 MB/S

BRMO CONNECTION JACK

Gigabit Ethernet

POWER CONNECTION JACK

Voltage 27 V

ANTENNA CONNECTION JACK GPS/ГЛОНАСС

EXTERIOR AND DEVICE TYPICAL BASIC SINGLE-MATRIX ELECTRO-OPTICAL CONVERSION MODULE

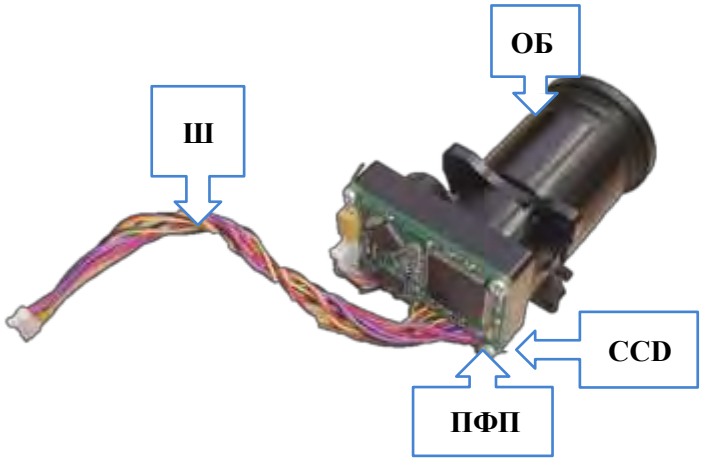

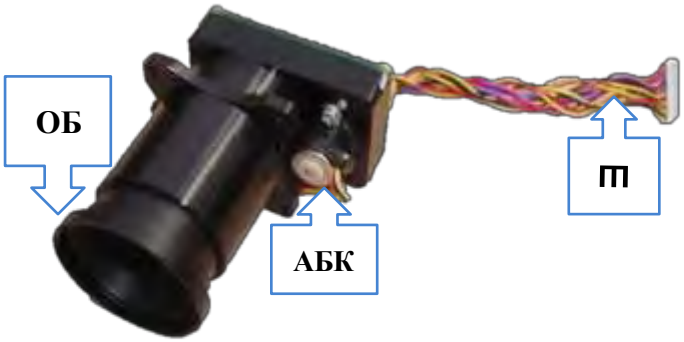

Ш
- Via serial digital interface communications with the electro-optical converter and unified raster processing module

ПФП
- Focal plane card. Controls CCD operations, conducts analog-digital conversion and initial raster processing using resources of the built-in PLIS

CCD
- Holder node for matrixed CCD-photoreceptor with progressive scan

ОБ
- High-resolution fast aperture lense

АБК
- Electromecanical node CCD anti-blocking protection

OSDCAM 4060

Flight altitude (km) **h**

High-altitude channel

Swath Width X=11.2km (1.83H)

6.1 km

85°

Medium altitude channel

Swath Width X=7.3km (2.38H)

3.05 km

100°

Low-altitude channel + ИК

Swath Width X=2.6km (2.6H)

1 km

105°

Swath Width **X**

OSDCAM 3660

High-altitude channel

Swath Width X=12.7km (1.54H)

Medium-altitude channel

Swath Width X=6.0km (2.0H)

Low-altitude channel

Swath Width X=3.0km (2.0H)

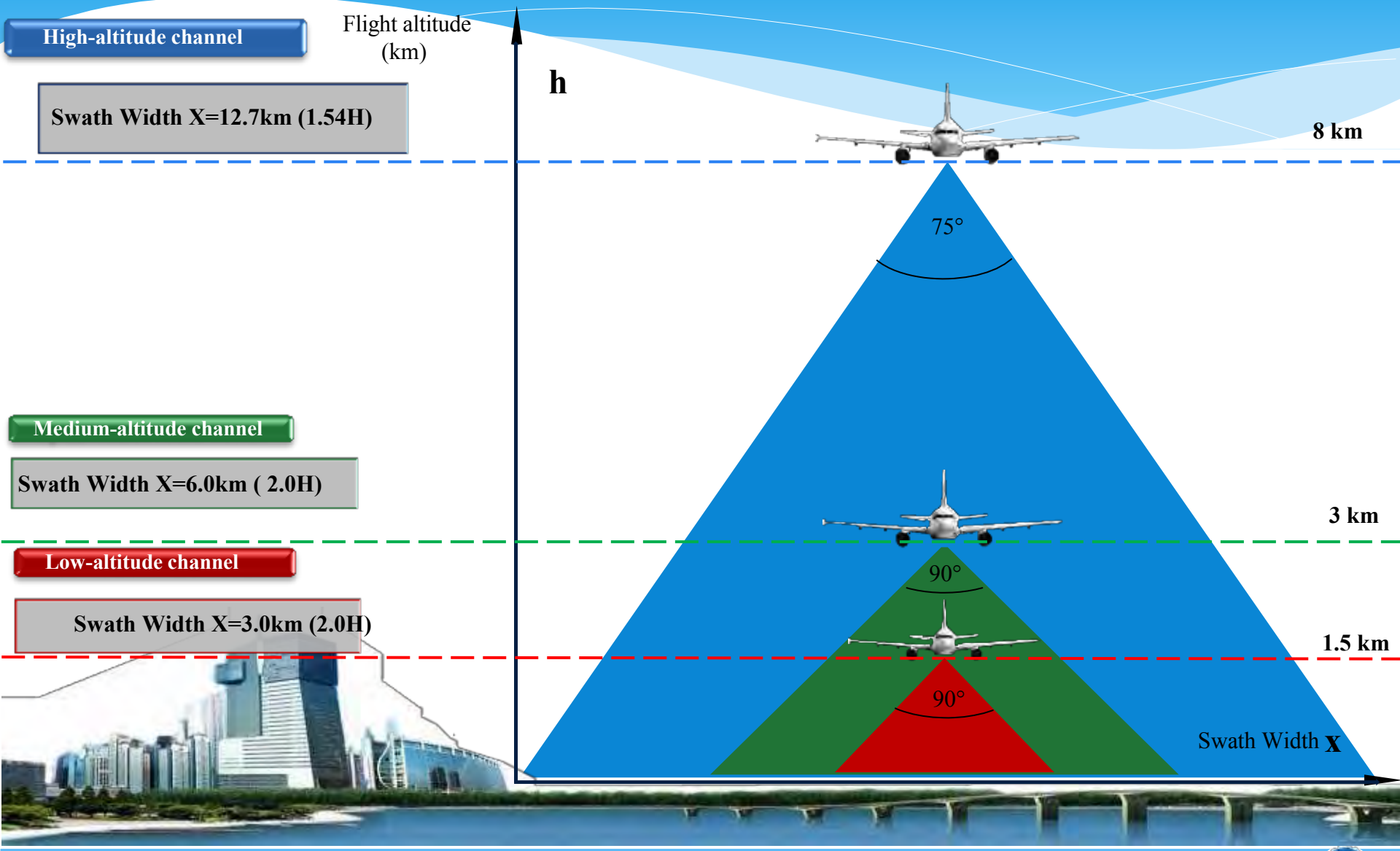

MAIN TACTICACAL TECHNICAL CHARACTERISTICS of EOOS «OSDCAM 4060» и «OSDCAM 3660»

Parameter	Sensor (channel) 4060			Sensor (channel) 3660		
	High	Mid	Low IR	High	Mid	Low
Across-track pixels, kilopixels	55,9	36,4	12,7	63,3	30,5	15,2
Estimated Hmin Altitude, km	6,1	3,0	1,0	8,2	3,0	1,5
Across-track viewing angle, deg.	85	100	105	75	90	90
Swath Width at Hmin, km	11,2	7,3	2,6	12,7	6,1	3,0
Display type	Color, RGB, 12 bit/pixel			Color, RGB, 12 bit/pixel		
Gyro stabilization in flight	Not needed			Not needed		

* B-high-altitude sensor
СВ-Medium-altitude sensor
МВ-Low-altitude sensor
ИК-Low-altitude sensor in band 0.7-1.1мкm (near IR)

COMPARISON WITH FOREIGN FRAME CAMERAS

Characteristic	DMC II 250	DMC II 230	UltraCam XP	UltraCam XP WA	OSDCAM4060 /OSDCAM3660
1. Country	Germany		Austria- USA		Russia
2. Manufacturer	Intergraph Z/I– Imaging		Vexcel-Microsoft		ПО КСИ
3. Device type	Frame RGBNir camera with pansharpening		Frame RGBNir camera with panshapening		Frame multi-lens camera (NIR+3RGB)/(3RGB) In one module
4. Spectral band of picture, nm, number and name of bands	450 – 740 PAN 600 – 675 R 515 – 595 G 425 – 515 B 695– 830 NIR		450 – 670 PAN 580 - 720 R 480 - 660 G 400 - 600 B, 620-1000 NIR		570 – 680 R 480 – 580 G 400 – 510 B 700 – 820 NIR
5. Possible types of formed images	PAN, R, G, B, NIR, RGB-pansharpening, CIR-pansharpening		PAN, R, G, B, NIR, RGB-pansharpening, CIR-pansharpening		RGB (Bayer square) NIR

COMPARISON WITH FOREIGN FRAME CAMERAS

Characteristic	DMC II 250	DMC II 230	UltraCam XP	UltraCam XP WA	OSDCAM4060/ OSDCAM3660		
					12К49/ 15К76	36К153/ 30К153	55К305/ 63К412
6. Frame size, pixels, ac x al	16768 x 14016 (PAN) 6846 x 6096 (R,G,B,NIR)	15552 x 14144 (PAN) 6846 x 6096 (R,G,B,NIR)	17310 x 11310 (PAN) 5770 x 3770 (R,G,B,NIR)		12700x1200 R,G,B NIR/ 15200x1200 R,G,B	36400x1200/ 30500x1200 R,G,B	55900x1200/ 63300x1200 R,G,B
7. Angular Field of View, Degrees, ac x al	45.5 x 38.6	50.7 x 46.6	55 x 37	73 x 52	105 x 14/ 89.8 x 11	100 x 4.5/ 90 x 5.6	85 x 2.3/ 75 x 2.1
8. Linear footprint m, when GSD=30 cm	5030 x 4200	4740 x 4300	5200 x 3350	5180 x 3410	2540 x 240/ 3040 x 240	7270 x 240/ 6110 x 240	11180 x 240/ 12660 x 240
9. Expected altitude Hmin, m	6000	5000	5000	3500	1000/ 1500	3100/ 3100	6100/ 8200
10. Image stabilization	Electronic compensation shift		Electronic compensation shift		Not needed		
11. Weight, kg	66 – Sensor unit		92 – full complex 65 – Sensor unit		52/58 – Sensor unit 20/20 – Control unit		
12. Data processing time at 1st workstation, min/km^2	0.3		0.3		0.01		

CAMERA CHARACTERISTIC COMPARISON BY PRODUCTIVITY

CAMERA	DMCII 250	DMCII 230	UC-XP	UC-XP WA	OSDCAM4060			OSDCAM3660		
					12К49	36К153	55К305	15К76	30К153	63К412
Focus distance (mm)	112	92	100	70	16	50	100	25	50	135
Pixel size (мkm)	5.6	5.6	6.0	6.0	3.3	3.3	3.3	3.3	3.3	3.3
H of photo. (m) when ground resolution is 30(cm)	6000	5000	5000	3500	1000	3050	6100	1500	3050	8200
Speed (km/h)	**Productivity (кв. km/час)**									
300	1590	1422	1560	1554	762	2181	3354	912	1833	3798
450	2385	2133	2340	2330	1143	3272	5031	1368	2750	5697
600	3180	2844	3120	3108	1524	4362	6708	1824	3666	7596
750	3975	3555	3900	3885	1905	5452	8385	2280	4582	9495
900	4770	4266	4680	4662	2286	6543	10062	2736	5500	11394

* Technical parameters taken from open internet sources, U. Raisman's presentation «Productivity analysis of arial photograpy systems» and can be changed by the developers of these cameras.

Example of EOOS “OSDCAM 4060” operation
Kubinka Open Skies airfiles, March 2011
Low-altitude IR sensor, altitude 1200m

Example of EOOS “OSDCAM 4060” operation
Stavropol’ region, 2011
Low-altitude sensor, altitude 1000m

Example of EOOS “OSDCAM 4060” operation
Port Sochi region 2011
Medium-altitude sensor, altitude 3000m

Example of EOOS “OSDCAM 4060” operation
Republic of Dagestan, 2011
High-altitude sensor, altitude 6100m

Using the camera «OSDCAM» gives :

- Capability to conduct the widest range of missions requiring functionality and precise data reception
- High quality materials (required resolution for location, full-color display)
- Rapid processing of large data files
- Coverage of large territories or extensive objects
- High shooting speed

Thanks for your attention

Leica ADS80

Airborne Digital Sensor
Digital Airborne Imaging Solution

The new Leica ADS80 offers performance in data acquisition and data processing superior to any other large-format digital sensor.

Simplicity

From flight planning with Leica FPES and data acquisition with the Sensor Heads SH91/92 to data delivery with Leica XPro, the Leica ADS80 represents a complete digital airborne imaging solution that is easy to use and fast to implement. Since pan-sharpening and "virtual images" are not necessary, Leica Geosystems line sensor technology constitutes a viable and simple digital alternative to those familiar with the traditional analog workflow.

Flexibility

Depending on the desired product, two available configurations, SH91 and SH92, acquire perfectly co-registered image data with equal resolution in panchromatic, color and color-infrared. The improved data throughput of the Control Unit CU80 facilitates simultaneous data acquisition of imagery for photogrammetry and remote sensing applications, offering you maximum flexibility.

Productivity

The best imagery in the world becomes less attractive if it cannot be produced and delivered in a reasonable time. The new Leica XPro ground processing software pairs the best airborne digital sensor with the fastest workflow. Leica XPro's "processing at the speed of flight" will make the Leica ADS80 the most productive sensor solution available.

Efficiency

The Leica ADS80 digital airborne imaging solution consists of subsystems and components, which almost entirely are developed and manufactured in-house. This way, Leica Geosystems can provide the tight integration necessary to deliver what you expect from your chosen airborne digital sensor: best results, highest productivity and lowest costs.

Reliability

Leica Geosystems' RC30 and many other products have for decades set the gold standard for the geospatial industry. The Leica ADS80 airborne digital sensor follows in this tradition and is the complete sensor solution available from the industry leader. Our worldwide support network ensures that you stay ahead of your competitors.

- when it has to be **right**

Leica Geosystems

Leica ADS80
Product Specifications

Electronic Characteristics of Data Acquisition Chain

Dynamic range CCD chain
12-bit
Resolution A/D converter
16-bit
Data channel
16-bit
Sensitivity
4x that of SH40
Data modes
ADS80 data format, low compression, raw
Data compression factor
~2.5x and ~3.6x
Data normalization modes
non-linear
Radiometric resolution of compr. data
10-bit and 12-bit
Recording interval per line (cycle time)
≥ 1 ms

Spectral Range and Filters

Spectral range
Panchromatic, RGB, Near-infrared
Spectral bands

Band	λ (nm)
Panchromatic (trapezoidal)	465–676 (at λ = 50 %)
Red (rectangular)	604–664
Green (rectangular)	533–587
Blue (rectangular)	420–492
Near-infrared (rectangular)	833–920

Optics D065

Field of View (FoV)
64° across track (swath angle)
f-number
4
Spectral range
420 nm – 900 nm
Sensor Resolution
~130 lp/mm, optimized for CCD's
Registration accuracy
1 µm
Lens design
Telecentric lens design
Maintains position & width of filter edges over whole FoV
Thermic & Pressure compensation for high accuracy

Video camera

Oblique view	10° behind nadir, 40° forward			
Swath width	wide	64°	normal	narrow
Zoom steps	1x	1.2x	2x 4x	5x 8x

Focal Plates (FPM)

One 4-band beamsplitter in Sensor Head SH91
Total: 8 CCD lines with 12000 pixels each, pixel size 6.5 µm
2 single Pan lines
1 pair of Pan lines staggered by half a pixel
4 Spectral lines: Red, Green, Blue, Near Infrared
Two 4-band beamsplitters in Sensor Head SH92 one in nadir and one in 16° BW
Total: 12 CCD lines with 12000 pixels each, pixel size 6.5 µm
2 single Pan lines
1 pair of Pan lines staggered by half a pixel
8 Spectral lines: 2x Red, 2x Green, 2x Blue, 2x Near-infrared

Mechanical Interface

Sensor Heads SH91 & SH92
Weight: 49 kg – 52 kg, depending on integrated IMU type
Diameter: 39 cm
Height: 70 cm
Fits PAV80 mount
Control Unit CU80
Weight: 32 kg; 19" rack mountable
Width: 49.5 cm; height: 36.5 cm; depth: 62 cm
Mass Memory MM80
Flash disk: weight: 2.5 kg, removable, portable
Operator Interface OI40
15" touch-screen with a resolution of 1024 x 768 pixels
Interface Stand IS40
IS40 stand fits RC30 NAV-sight installation
IMU integrated in Sensor Head
Leica IPAS20-NUS4
Leica IPAS20-DUS5
Leica IPAS20-NUS5
Leica IPAS20-CUS6
GNSS/IMU system integrated in CU80
Leica IPAS Freebird embedded (GPS & GLONASS)
Mount
Leica PAV80 gyro-stabilized mount
Pilot Interface OC50
6.3" screen with 1024 x 768 pixel resolution
Guidance Indicator GI40
LED array display designed for cockpit mounting
Total weight installed
145 kg – 150 kg (depending on IMU)

Operational

Capacity of Mass Memory (Pair)
480 GB per Mass Memory – 980 GB joint volume for 9.7 h recording in ADS80 data format at 2.5 msec with 3 Pan and 4 Spectral bands
Firmware & Software
FCMS Flight and Sensor Control Management System
Maximum Ground Speed (GS) for various post-processed GSD
max. GS = 90 kts for GSD of 1.2" / 3 cm
max. GS = 140 kts for GSD of 2" / 5 cm
max. GS = 190 kts for GSD of 3" / 7.5 cm
max. GS = 240 kts for GSD of 4" / 10 cm
max. GS > 300 kts for GSD of > 6" / 15 cm

Environmental

Pressure
Non-pressurized cabin up to ICAO 25,000 ft (7,620 m)
Humidity
0 % to 95 % RH according ISO 7137
Operating temperature
–20 °C to +55 °C
Storage temperature (except SH91/92)
–40 °C to 85 °C
Storage temperature SH91/92
–40 °C to 70 °C

Electrical

Average power consumption (incl. Sensor Head, CU80, PAV30, OI40, OC50, GI40)
<790 W / 28 VDC
Fuses on aircraft power outlet
Typically 1 x 35 A or 2 x 20 A

Standards

General standards for temperature, electronics environment, etc.
ISO 7137; RTCA DO-160E, EUROCAE-14E
Standard for emergency landings
FAR § 25.561
Conformity to national regulations
USA: FCC Part 15, EU: Directive 1999/5/EC

Data Formats

Output from GPro/XPro post-processing:
JPEG and TIFF tiled

Mapping Accuracies

Average GSD with ADS80	Map Scale	Map standard	
		x-y accuracy RMSE	contour interval
5 – 10 cm	1:500	0.125 m	0.25 m
10 – 15 cm	1:1000	0.25 m	0.5 m
15 – 20 cm	1:1500	0.40 m	0.75 m
20 – 30 cm	1:2000	0.50 m	1 m
25 – 35 cm	1:2500	0.60 m	1.25 m
30 – 50 cm	1:5000	1.25 m	2.5 m
40 – 60 cm	1:10000	2.50 m	5 m
50 – 70 cm	1:20000	5.00 m	10 m
50 – 80 cm	1:25000	6.25 m	12.5 m
50 – 100 cm	1:50000	12.5 m	20 m
50 – 100 cm	1:100000	25 m	50 m

Quality of external orientation of Leica ADS80 images depending on mission parameters and based on the application of PPP (Precise ephemeris data)

Mission Type	Mission Parameters				5 cm GSD		10 cm GSD		15 cm GSD		20 cm GSD	
	GNSS data	GNSS ground ref station	Aero-triangu-lation	GCPs	relative	absolute (cm)	relative	absolute (cm)	relative	absolute (cm)	relative	absolute (cm)
1	PPP	no	no	no	5 pixels	< 100	5 pixels	< 100	5 pixels	< 100	5 pixels	< 100
2			yes	no	1 pixel	< 50	1 pixel	< 50	1 pixel	< 50	1 pixel	< 50
3			yes	yes	0.5 pixels	< 5	0.5 pixels	< 10	0.5 pixels	< 15	0.5 pixels	< 20
4	phase diffe-rential	yes	no	no	5 pixels	< 100	5 pixels	< 100	5 pixels	< 100	5 pixels	< 100
5			yes	no	1 pixel	< 50	1 pixel	< 50	1 pixel	< 50	1 pixel	< 50
6			yes	yes	0.5 pixels	< 5	0.5 pixels	< 6	0.5 pixels	< 8	0.5 pixels	< 10

Illustrations, descriptions and technical specifications are not binding and may change. Printed in Switzerland – Copyright Leica Geosystems AG, Heerbrugg, Switzerland, 2011.
767502en – III.11 – RDV

Leica Geosystems AG
Heerbrugg, Switzerland

www.leica-geosystems.com

- when it has to be **right**

Leica Geosystems

Xenics
Infrared Solutions

Imagine the invisible

Research & Development

Lynx-1.7-2048 TE1

High resolution, high speed cooled SWIR line-scan camera

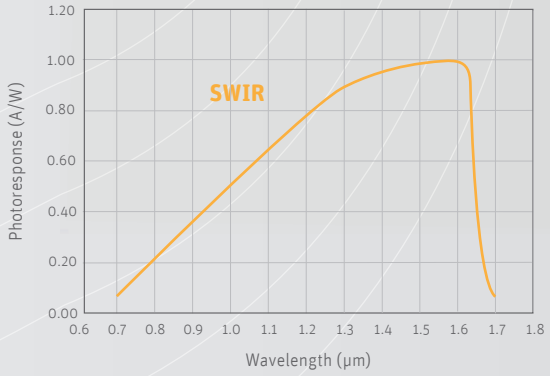

World's highest resolution SWIR line-scan camera with excellent sensitivity

The Lynx-1.7-2048 SWIR line-scan camera with TE1 stabilized cooling is raising technology to new peaks for high speed imaging applications in imaging and medical OCT, as well as in low light level applications such as raman, emission and luminescence spectroscopy.

With a unique high line resolution of 2048 pixels, Lynx-1.7-2048 offers worldwide the highest resolution with the smallest pixel formats from 12.5 x 12.5 µm² square pixels to 12.5 x 250 µm² rectangular pixels. This enables more accurate inspection and smaller particle detection at shorter wavelengths than other cameras. In addition the Lynx-1.7-2048 features a high line rate of up to 10 kHz.

To further reduce dark current and improve signal to noise ratios you can use the Lynx with standard TE1-cooler in High Sensitivity mode (HS) of only a few e-/count, or in a High Dynamic Range mode (HDR). You can choose from various configurations in between HS and HDR mode in order to optimize the performance for your application.

Designed for use in

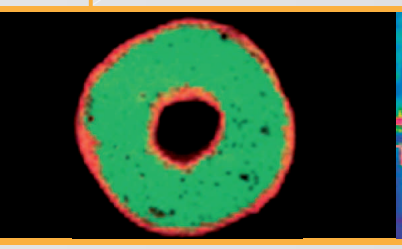

Spectroscopy: food inspection

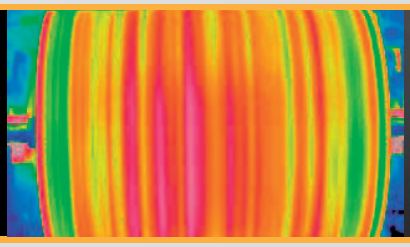

High speed: line-scan imaging

Food sorting

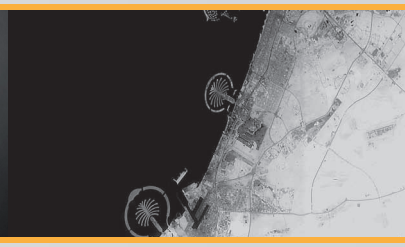

Remote sensing

Applications

- Spectroscopy
- Medical: OCT
- Food inspection
- Line-scan imaging
- Non-destructive testing
- Non-contact thermal imaging
- Earth observation (space, airborne)

Benefits & Features

- Spectrograph compatible
- Standard interface connections
- Superb low dark current imaging
- High sensitivity for low-light conditions
- Unique high image resolution of 2048 line pixels
- Broad range of pixel sizes, square and rectangular
- Reduced illumination requirements at system level

Broad range of accessories available to simplify your research

Lens & filter options

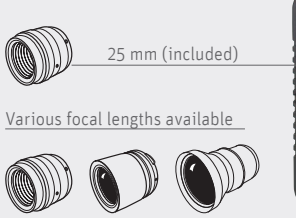

> Discover our Lens Selector Guide
www.xenics.com/LSG

Inputs

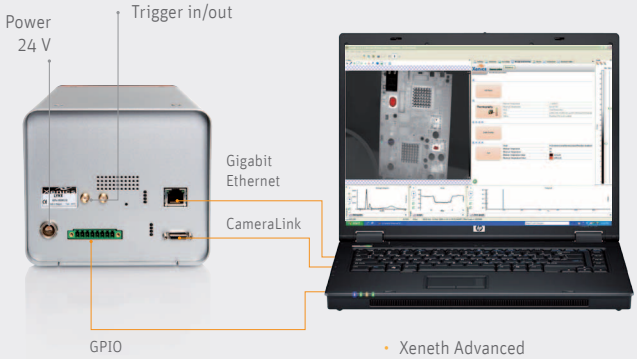

Outputs

Software

- Xeneth Advanced
- Xeneth SDK
- Xeneth LabVIEW SDK (optional)

Specifications

Camera specifications	Lynx-1.7-2048
Lens (included)	
Focal length	25 mm f/2.1 for 25.6 mm (SWIR)
Optical interface	C-mount with adjustable back focus Mounts easily to spectrometers Optional: U-mount with adjustable back focus Optional: Filter holder
Imaging performance	
Line rate	Max 10 kHz (CL)
Pixel rate	25 MPixels/sec
Integration time	Full flexibility in settings from 3 µs to several seconds
A to D conversion resolution	14 bit
CDS	Correlated Double Sampling
Gain capacitor characteristics	Optimized for 12.5 µm pixel performance
Gain settings (16 settings)	Various Settings from 30 fF (HS) to 830 fF (HDR)
Pixel well depth	From 450 Ke- (HS) till 10 Me- (HDR) *
Gain (in 16 bit)	From 8 e-/ADU count (HS) till 225 e-/ADU count (HDR) *
Dynamic range	From 280:1 (HS) till 2600:1 (HDR) *
On-board image processing	Image correction, Non-Uniformity Correction (NUC), offset and gain correction
Interfaces	
Digital output	14 bit Base CameraLink 14 bit GigE
Camera control	CameraLink: XSP (Xenics Serial Protocol) Gigabit Ethernet: GigE or Xeneth API/SDK RS232: XSP (Xenics Serial Protocol)
Image acquisition	Integrate while read / integrate then read; snapshot acquisition
Trigger	Trigger in and out; LVCMOS Modes: free running or user selectable frame size per trigger
External trigger jitter	40 ns
Power requirements	
Power consumption	+/- 19 W (without TEC operation)
Power supply	24 V DC
Physical characteristics	
Ambient operating temperature	0 °C to 50 °C
Dimensions	140 W x 120 H x 228 L mm
Weight camera head	2.9 kg
Camera mount	4 x M6 / Tripod mount

(*): Typical values, depending on gain setting
(HS): High Sensitivity mode
(HDR): High Dynamic Range mode

Array specifications	Xlin-1.7-2048
Array type	InGaAs
# outputs	2 outputs
Spectral band	0.9 * to 1.7 µm
# pixels	2048 x 1
Pixel pitch	12.5 µm
Pixel height	12.5 µm or 250 µm
Dark current array	1.5×10^6 e-/s ** square pixel array 1.5×10^7 e-/s ** rectangular pixel array
InGaAs array length	25.6 mm
Thermo-Electric Cooler	TE1 (to max -10 °C)
Pixel operability	> 98 %

(*) Quantum Efficiency (QE) drops below 40% at 0.9 µm
(**) @ 25 °C sensor temperature (typical value)

Product selector guide

Part number	# Pixels	Pixel size (µm²)	TE Cooler
XEN-000022	2048 x 1	12.5 x 12.5	TE1
XEN-000025		12.5 x 250	

XB-090 issue 02| Information furnished by Xenics is believed to be reliable. However, no responsibility is assumed for possible inaccuracies or omissions. Specifications are subject to change without notice. This information supersedes all previously supplied information.

www.xenics.com
www.sinfrared.com

Xenics Headquarters
Ambachtenlaan 44, BE-3001 Leuven, Belgium
T +32 16 38 99 00 • sales@xenics.com

Xenics
Infrared Solutions

ISO 9001:2008 certified

Long-Life™ MCP Selection Guide

Long-Life™ Microchannel Plates

Long-Life™ Microchannel Plates exclusively from PHOTONIS provide sustained output up to five times longer than other MCPs.

Extended Dynamic Range™ MCPs provide the highest dynamic range available (EDR).

Detection Efficiency - PHOTONIS offers small pore MCPs and optional enhancement coatings for the highest possible detection efficiency.

TruFlite™ MountingPad™ MCPs reduce the Time-of-Flight Mass Spectrometer arrival time jitter.

PHOTONIS

PHOTONIS

PHOTONIS brings you the most advanced MCP technology in the World

PHOTONIS products have led the industry in electro-optics and fiber optics for over 40 years. We supply standard and custom made products and offer personal expert service designed to meet the rigorous demands of radiation detection and signal amplification applications. Our unrivaled expertise in designing and manufacturing Long-Life™ Microchannel Plates and related technology ensures the most sensitive and highly-integrated systems available for today and tomorrow.

Our diverse manufacturing capabilities provide solutions for any detection application, no matter how unique. PHOTONIS is the largest microchannel plate manufacturer in the world with the most advanced equipment for producing MCPs and MCP Detector Assemblies (APDs) to add additional value.

PHOTONIS Long-Life™ Microchannel Plates use an exclusive material which has demonstrated superior lifetime characteristics in a wide range of detection and imaging applications.

Long-Life™ Microchannel Plates are the foundation for a variety of applications including image intensification, remote detection, surface science, space science, high energy physics, and mass spectrometry. They offer longer life, higher gain, and lower dark current than any other commercially available microchannel plate.

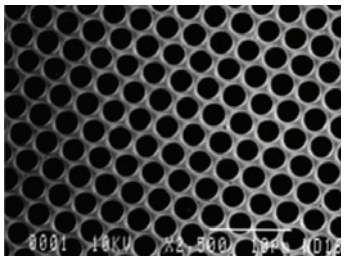

PHOTONIS 2-micron pore MCP provide the highest spatial and temporal resolution in the world.

Our unique MountingPad™ design minimizes MCP warping and cracking. TruFlite™ MCPs are optimized for flatness to reduce time jitter for Time-of-Flight applications.

This table will help you to select the right configuration for your specific application. If you have any questions or need assistance, do not hesitate to contact us at sales@usa.photonis.com.

MCP 18 / 6 / 5 / 12 D 60:1 6.4CH EDR CSI 80FLAT, MS

Quality Diameter (mm)
18
25
40
75
120
150

Pitch C-To-C (microns)	Pore Size Diameter (microns)
3	2
6	5
10	8
12	10
32	25

MCP Grade
D - Detection
I - Image
P - Premium

Geometry
(Blank) - Rimmed
MP - MountingPad™
NR - Rimless
#CH – Center Hole (mm inner diameter)

Additional Coatings
(Blank) - None
AU - Gold
CSI Cesium Iodide
MGF2 - Magnesium Fluoride
MGO - Magnesium Oxide
KBR - Potassium Bromide
CUI - Copper Iodide

Flatness
(Blank) - Standard
#FLAT - Microns out of Flat

Quality Dimensions (mm)
1.4 x 1.3
12 x 11
80 x 100
100 x 15
100 x 80
123 x 41

direction of bias

L Rectangular MCPs W

Bias Angle (degrees)
0
5
8
12
19

Aspect Ratio (Thickness : Channel Diameter)
40:1
46:1
60:1
80:1

Bias Current
(Blank) - Standard
EDR - Extended Dynamic Range™
#-#UA - Range (Microamps)

Multiples (Quantity MCPs)
(Blank) – Individual Plate (1)
MS – Matched Set (2)
MZ – Matched Z-Stack (3)
TC – Tested Chevron™ (2)
TZ – Tested Z-Stack (3)

Custom MCPs

In addition to the most complete line of standard MCPs available, PHOTONIS also offers a wide range of custom products. Among the options available are: Custom formats (rectangular, annular sector, circular zone, virtually any shape and size), enhancement coatings, optimized bias currents, specialized performance testing, custom aspect ratios, custom electroding depths and Square Pore MCPs e.g. for UV and X-ray focusing.

Pitch / Pore Size

The spatial and temporal resolution of microchannel plates varies inversely with their center-to-center spacing (Pitch). Our highest resolution 2µm pore MCPs are ideal for applications where image detail or fast response time is important.

Bias Angle

The bias angle of a microchannel plate is the angle of the channel with the surface normal. It can be varied in order to optimize the angular dependency of UV and soft X-ray detection. Collimation applications primarily select 0° bias angles. High resolution analog detection applications are optimal at 5°. Chevron and Z-Stack assemblies perform best with 8° or 12° bias angle MCPs.

Three Classifications of MCPs

Detection Grade MCPs are designed for a wide range of signal detection applications where devices are used as single-point detectors and amplifiers. Detection grade is typical for Time-of-Flight mass spectrometry, residual gas analysis and point detectors. Detection grade is the best choice and value for non-imaging applications.

Image Grade MCPs are designed for imaging or position sensing applications. When used in conjunction with an appropriate readout, these devices provide an intensified high resolution image. Image grade is found in such applications as image intensifier tubes, ultra-fast cathode ray tubes and various analytical techniques such as ESCA, magnetic sector mass spectrometry and VUV spectrometry.

Premium Grade MCPs are manufactured to the highest quality specifications achievable. They are used in precision imaging applications requiring superior image quality such as high speed photography, image intensifiers and other electronic imaging applications. Premium grade MCPs are the preferred choice for space applications where product reliability and performance are critical.

Extended Dynamic Range™

The dynamic range of an MCP is ultimately limited, at high count rates, by the bias current. Secondary electrons produce a region of charge depletion at the emissive surface. Further multiplication cannot occur until the charge is replenished. The Extended Dynamic Range™ (EDR) option will typically increase the detection limit by a factor of ten.

Aspect Ratio

PHOTONIS offers Standard 40:1 Channel Length-to-Diameter (L/D) ratio or Advanced Performance 60:1 L/D ratio MCPs. Standard MCPs have been optimized and demonstrate superior performance for imaging applications. Advanced Performance MCPs are the preferred devices for most detection applications. Advanced Performance MCPs provide a higher gain and narrower Pulse Height Distribution and with their higher length-to-diameter ratio a thicker, more robust microchannel plate. This ensures greater mechanical durability and simplifies handling and assembly operations.

MCP Configurations

Matching the bias currents of an MCP set allows the set to be operated by a single power supply, which eliminates the need for center tabs and voltage dividers, leading to improvements in spatial resolution and Pulse Height Distribution. There are two basic modes of MCP Operation, i.e. Pulse Counting detection and Current Amplifier Mode (or Analog Mode).

- MS: Matched Set – 2 matched resistance MCPs suitable for a Chevron™.
- TC: Tested as a Chevron™ – 2 matched resistance MCPs tested in the high gain Chevron™ configuration.
- MZ: Matched Z – 3 matched resistance MCPs suitable for making a Z-Stack.
- TZ: Tested as a Z-Stack – 3 matched MCPs tested in the high gain Z-Stack configuration.

Format

PHOTONIS offers a wide range of standard and custom formats such as rectangular, arced or with mounting holes, and in virtually any shape and size.

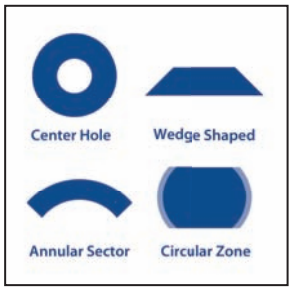

MountingPad™ Technology

PHOTONIS' patented MountingPad™ Technology provides advantages over both Rimmed and Rimless MCPs by virtually eliminating MCP warping and cracking that can occur with moisture absorbtion.

Coatings

The standard MCP electroding coating is NiCr. Cesium Iodide (CsI), Copper Iodide (CuI), and Magnesium Fluoride (MgF_2) enhance the detection of ultraviolet photons from 20 to 200 nm. MgO improves electron detection efficiency. KBr improves detection efficiency of soft X-rays in the 0.2 to 9 keV range. Gold (Au) electrodes are available for rapid charge replenishment.

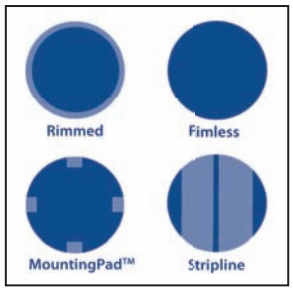

PHOTONIS also offers stripline coatings on MCPs. Stripline MCPs are image-grade detectors with several layers of electroding material to sequentially capture high-speed charged particle events.

MCP Performance Characteristics

Configuration	L/D Ratio	Max. Voltage	Gain	Pulse Height
CEMA	40:1	1000	$>4x10^3$	Neg. Exp.
1 MCP	60:1	1200	$>1x10^4$	Neg. Exp.
Chevron™	40:1	2000	$>4x10^6$	<175%
2 MCPs	60:1	2400	$>1x10^7$	<100%
Z-Stack	40:1	3000	$>3x10^7$	<120%
3 MCPs	60:1	3600	$>2x10^8$	< 60%

Applications

Some of the PHOTONIS Advanced Performance Long-Life™ Microchannel Plate Detector Applications:

- Time-Of-Flight Mass Spectrometry
- Secondary Ion Mass Spectrometry
- Scanning Electron Microscopy (SEM)
- Focused Ion Beam (FIB)
- e-Beam/ X-Ray Lithography
- Particle Physics
- Residual Gas Analysis (RGA)
- Ion Beam Profiling
- Plasma Profiling
- Semiconductor Metrology
- High Energy Physics
- Space Exploration

PHOTONIS For more information, please visit www.photonis.com

PHOTONIS USA Inc.
Sturbridge Business Park
P.O. Box 1159
Sturbridge, MA 01566
United States of America

T +1 800 648 1800 (US & Can)
T +1 508 347 4000 (Int. calls)
F +1 508 347 3849

Email: sales@usa.photonis.com

PHOTONIS France SAS
Avenue Roger Roncier
19100 Brive La Gaillarde
France

T +33 (0)555 86 37 00
F +33 (0)555 86 37 74

Email: sales@photonis.com

The information furnished is believed to be accurate and reliable, but is not guaranteed and is subject to change without notice. No liability is assumed by PHOTONIS for its use. Performance data represents typical characteristics as individual product performance may vary. Customers should verify that they have the most current PHOTONIS product information before placing orders. No claims or warranties are made as to the application of PHOTONIS products. Pictures may not be considered as contractually binding. This document may not be reproduced, in whole or in part, without the prior written consent of PHOTONIS.

EP107/FEB11

Preliminary

Xenics
Infrared Solutions

Imagine the invisible

Security

Meerkat-Fusion

True image fusion of VIS, SWIR or LWIR in one powerful surveillance system

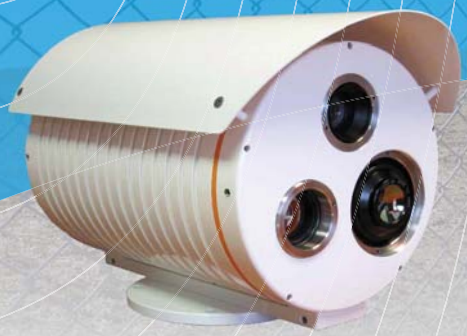

Sophisticated vision enhancement, more than just video overlay

The Meerkat-Fusion camera is demonstrating one of the latest technology trends with sophisticated vision enhancement. This development is more than just video overlay, especially needed in security applications. The fusion of visual and SWIR or LWIR imaging or alternatively of SWIR and LWIR enhances the vision of a scene and can set thermal accents in SWIR or visual images.

From another point of view it delivers information about the form factor (VIS), the temperature (LWIR) and even about the humidity (SWIR) of an object. This technique can save many lives for example in early fire detection.

Meerkat-Fusion offers the earliest and most reliable detection of the smallest temperature changes and the smallest objects.

Designed for use in

Visual imaging

Vision enhancement: VIS + SWIR

Vision enhancement: SWIR + LWIR

Firefighting

Applications

- Night vision
- Surveillance
- Fire detection
- Vision enhancement
- Perimeter protection
- Situational awareness

Benefits & Features

- Made in Europe
- Novel multi-sensor image fusion in different wavelengths
- Rugged and lightweight with an easy to mount protective housing
- Excellent connectivity over PAL/NTSC video or Ethernet for digital LAN

Complete system

Multi-sensor image fusion

SWIR
The SWIR camera offers unique and valuable characteristics and features, with a spectral range from 0.9 to 1.7 micrometer. The SWIR camera penetrates smoke, fog and other atmospherically disturbances.

LWIR
The LWIR or thermal camera has unsurpassed imaging quality, thermal sensitivity and accuracy by applying advanced image enhancement and image stability.

Visual
The visual camera offers excellent (color) background information

Excellent connectivity
You can easily connect the Meerkat Fusion system over PAL/NTSC video or ethernet for digital LAN

Rugged and easy-to-mount protective housing
The white colored housing has been especially designed to withstand the harshest weather conditions. It integrates 3 cameras in one complete system with most efficient heat dissipation.

Specifications

IR Camera	VIS	SWIR	LWIR
Detector type	CMOS	InGaAs	Bolometer
Resolution	1600 x 1200	320 x 256	384 x 288
Pitch	-	20 µm	25 µm
Spectral range	-	0.9 - 1.7	8.0 - 14.0
Focal length (f/1)	25 mm	25 mm	25 mm
Image frequency	20 Hz Ethernet		
Focus	Fixed		
Electronic zoom	2x over Ethernet		
Image Presentation			
Video output	NTSC / PAL		
Digital Control	Ethernet (TCP-IP)		
Digital Output	Ethernet (TCP-IP)		
Environmental Specifications			
Operating temperature range	-20°C to +50°C		
Storage temperature range	-50°C to +85°C		
Environmental	IP66 (EN 60529)		
Physical Characteristics			
System weight	<10 Kg		
External dimensions	200 x 220 x 300 mm		

XB-054 issue 1 | Information furnished by Xenics is believed to be reliable. However, no responsibility is assumed for possible inaccuracies or omissions Specifications are subject to change without notice. This information supersedes all previously supplied information.

www.xenics.com
www.sinfrared.com

Xenics Headquarters
Ambachtenlaan 44, BE-3001 Leuven, Belgium
T +32 16 38 99 00 • sales@xenics.com

Xenics
Infrared Solutions

ISO 9001:2008 certified

Meerkat-Fusion

True image fusion of VIS, SWIR or LWIR
in one powerful surveillance system

Sophisticated vision enhancement, more than just video overlay

The Meerkat-Fusion camera is demonstrating one of the latest technology trends with sophisticated vision enhancement. This development is more than just video overlay, especially needed in security applications. The fusion of visual and SWIR or LWIR imaging or alternatively of SWIR and LWIR enhances the vision of a scene and can set thermal accents in SWIR or visual images.

From another point of view it delivers information about the form factor (VIS), the temperature (LWIR) and even about the humidity (SWIR) of an object. This technique can save many lives for example in early fire

Benefits & features

- Made in Europe
  Easy to export - no ITAR
- Novel multi-sensor image fusion in different wavelengths
- Rugged and lightweight with an easy to mount protective housing

MicroCAM™ 1024HD

High Definition Thermal Imaging System

NEW! 1024x768 17µ

MicroCAM 1024HD uses the very latest 1024x768 17um uncooled LWIR sensor technology for stunning high definition images. Conventional TV resolution 640x480 devices traditionally used analogue video standards such as NTSC or PAL to transfer images to the display device. With the advent of high definition sensors, digital interfaces are now expected to provide substantially higher quality display capabilities. **MicroCAM 1024HD** uses GigE Vision to transfer raw sensor data to the host computer where image and graphic processing takes place. This ensures no loss of fidelity between sensor and display/recording system. Thermoteknix provide software to allow manipulation and recording of the HD thermal imagery onto your PC.

CAMERA	
Sensor type	1024x768 17µm Amorphous Silicon microbolometer
Sensitivity	<60mK
Frame rate	30fps
Response time	<10mSec
Sensor stabilisation	TEC-less operation
NUC	Mechanical shutter (auto/manual) or XTi Shutterless
Digital dynamic range	14 bit analogue to digital convertor
Scene dynamic range	150˚ degrees Celsius
Lens mounts	Range of different lenses supported, including Manual focus, Motorised focus and optical zoom.
Output	GigE Vision digital video (Raw)
SOFTWARE	
Frame rate	30fps
Operating system	Microsoft Windows 7 onwards
Controls	Black hot White hot / Manual gain control
Recording (video)	AVI movies
Recording (Static)	Windows Bitmaps

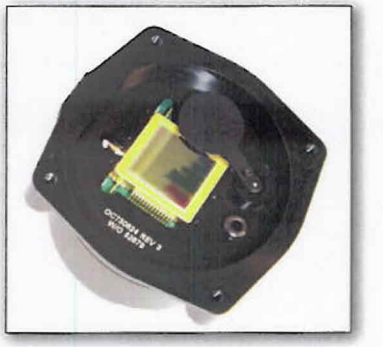

Thermoteknix Systems Ltd

more than just an image...

UK Head Office: Teknix House, 2 Pembroke Avenue, Waterbeach, Cambridge, CB25 9QR, UK

ULTRACAM OSPREY

NEW!

Overview

A whole new breed of camera, the Microsoft UltraCam Osprey digital photogrammetric camera system combines a high performing photogrammetric nadir camera with oblique capture capability, offering a more versatile dataset than other oblique systems on the market today.

More than a standard photogrammetric camera, the UltraCam Osprey houses two cameras in one photogrammetric grade housing, using cutting edge technology with nadir and oblique wings, serving applications such as cadastre, infrastructure planning, DTMOrtho or DSMOrtho generation. Like all UltraCam systems, the UltraCam Osprey delivers subpixel accuracy, high dynamic range, and integrates all system components in the sensor head including the optional UltraNav direct georeferencing and flight management subsystem, as well as full UltraMap software support.

With best-in-class flight collection efficiency, the UltraCam Osprey is designed so that the full swath width of the nadir cone (11,674 pixel) can be used and wing image overlap is high enough to generate oblique orthos as well as textured DSMs. The UltraCam Osprey is the ideal sensor system for projects such as urban mapping and 3D city modeling.

Features

- *Combines a high performing photogrammetric nadir camera with oblique capture capability.*
- *3D generation and custom electronics deliver a 1 frame per 2.0 second frame rate.*
- *An integrated package that contains all components in the sensor head, including an optional embedded OEM UltraNav GPS/INS/FMS system, and modular solid-state storage, providing flexibility for onboard orientation of equipment.*
- *An in-flight exchangeable solid-state image storage system to store more than 3,160 images, resulting in minimal ground time.*
- *Panchromatic nadir image size 11,674 * 7,514 pixels, with a panchromatic nadir physical pixel size of 6.0 µm, offered by the latest CCD technology, new custom lenses and filters, and silent-board camera electronics.*
- *A user-focused interface with touchscreen technology to ease configuration and operation and allow in-flight control of each image.*
- *Power consumption at full performance, including computer and storage module: 350 watts*

ULTRACAM EAGLE

Ultra-LARGE. Ultra-RELIABLE. Ultra-EFFICIENT.

Overview

The Microsoft UltraCam Eagle represents a revolution in digital photogrammetric camera systems and sets new industry standards for digital aerial photography, enabling customers to soar to new heights with their mapping projects. UltraCam Eagle builds on the award-winning UltraCam legacy and reputation; Microsoft has further developed nearly every component of the camera, while still delivering a reliable and economical solution that captures breathtaking images.

UltraCam Eagle introduces a modular housing concept, setting a new standard in component integration, which reduces sensor head size and balances weight. The updated sensor head includes an exchangeable lens system with two different focal lengths—a groundbreaking enhancement in digital photogrammetry—and is specifically designed for high-resolution digital aerial photography. UltraCam Eagle also presents filters with curved characteristics and silent-board camera electronics, further ushering in revolutionary aerial photogrammetric technology. Embedded in the integrated component package is UltraNav, a flight management and georeferencing system that includes state-of-the-art GNSS-Inertial technology, pilot displays, and flight-planning software.

The result is an ultra-reliable, ultra-efficient, ultra-large-footprint camera that screams through image acquisitions, captures the smallest details, and enables direct and swift flights that are not limited by technology.

Features

- *Largest PAN frame image footprint of ultra-large format cameras; more than 20,000 pixels across the flight strip.*
- *Custom electronics that deliver 3.7 gigabits per second of image collection, resulting in a frame rate of less than 1.80 seconds and forward overlapping of 80 percent at 284 kts for 10 cm GSD images.*
- *An integrated package that contains all components in the sensor head, including UltraNav, an optional embedded GPS/INS/FMS system, and modular solid-state storage, providing flexibility for onboard orientation of equipment.*
- *An in-flight exchangeable solid-state image storage system to store more than 3,800 images, resulting in minimal ground time.*
- *Exchangeable lens system configurations with two different focal lengths for greater flexibility, from lower-altitude engineering applications to high-altitude orthophotography projects.*
- *Pixel size of 5.2 µm, as well as enhanced PAN 7,600 grey value image dynamic, offered by the latest CCD technology, new custom lenses and filters, and silent-board camera electronics.*
- *A user-focused interface with touchscreen technology to ease configuration and operation and allow in-flight control of each image.*
- *A compact unit weighing less than 75 kg (165 lbs) and reduced power consumption of 350 watts @ 24-28 VDC for increased flight efficiency.*

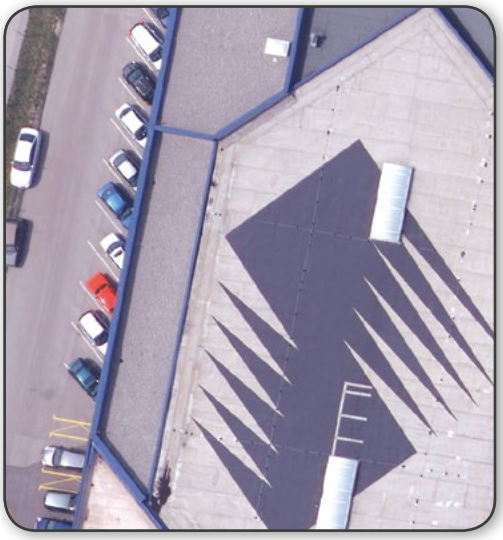

Microsoft

Microsoft

ULTRACAM FALCON

NEW!

Overview

The new Microsoft UltraCam Falcon digital photogrammetric camera system fills the gap between the UltraCamLp and the ultra-large UltraCam Eagle on the continuum of image footprint and price. With the introduction of the UltraCam Falcon, Microsoft continues to add products to its camera line that maximize customer benefits with sensor systems that provide unique features and capabilities at varying price points. Like all UltraCam systems, the UltraCam Falcon was designed with the different needs of aerial camera users in mind, such as varying project requirements and budget restrictions. To address these differences, the UltraCam Falcon is available in custom configurations, selected at the time of purchase, while also leveraging the impressive computing, storage, electronics and UltraNav technology introduced with the ultra-large UltraCam Eagle.

The UltraCam Falcon provides enhanced flexibility and operational efficiency compared to comparable digital camera technologies in its class. At the time of purchase, customers select from two image footprint sizes and two lens focal lengths, as well as two housing configurations. To meet the evolving needs of the customer data acquisition company, the UltraCam Falcon can be easily upgraded to become an UltraCam Eagle.

Features

- *Image footprint capacity: 14,430 pixels across the flight strip.*
- *Lens focal length options: choice of 100 mm (standard) or 70mm (wide angle) focal length PAN lens systems to meet each customer's specific project needs.*
- *Housing configuration options: choice of a fully integrated system or separate sensor head and external computer/storage unit, selected at time of purchase.*
- *An integrated package that contains all components in the sensor head, including a solid-state image storage system to store approximately 7,500 images (with 14,430 pixel footprint) and 5,200 images (with 17,310 pixel footprint). Storage units can be exchanged in flight, resulting in minimal ground time.*
- *Capture PAN, color and NIR data all in one pass.*
- *PAN 7,600 gray values per pixel, offered by the latest CCD technology and silent-board camera electronics, for optimal radiometry and photogrammetric results.*
- *A user-focused interface with touch-screen technology to ease configuration and operation, and allow in-flight control of each image.*
- *A compact unit weighing less than 75 kg (165 lbs) and reduced power consumption of 350 watts @ 24-28 VDC for increased flight efficiency.*

Fig. 1: Range of UltraCam image footprints

Microsoft

www.iFlyUltraCam.com

ULTRACAMLp

Photogrammetric Digital Aerial Camera

Features an impressive collection footprint of 92 megapixels (11,704 x 7,920 pixels pan)

Overview

The UltraCamLp features an image footprint collection capacity of 92 megapixels (11,704 x 7,920 pixels pan), made possible through advanced electronics and a CCD array of just 6 µm. The system is ideal for smaller large-scale and photogrammetric projects, high-resolution (true) orthophoto production, DSM (digital surface model) production, aerotriangulation, corridor mapping, classification, and lidar integration. Benefits of the UltraCamLp rapid cycle rate include:

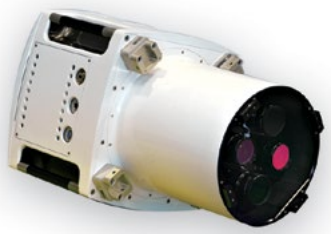

- Data collection at higher flight speeds
- Increase of potential forward overlap for a given GSD and speed
- Data collection at higher resolutions with the same forward overlap and speed

With superior image quality, the UltraCamLp can be used on smaller airplanes, and thus operated at lower cost. Smaller mapping companies have an affordable option for offering a digital platform and expanding their aerial services. The UltraCamLp is also ideal for larger mapping firms who need to cost-effectively fly small projects or collect digital data in conjunction with lidar or other data. The UltraCamLp provides the same high geometric accuracy, broad dynamic range, matching and stereo capabilities, and full metric capabilities, as the larger footprint UltraCam cameras. The image data are suitable for DSM (digital surface model) production, aerotriangulation, ortho mapping and 3D technical vector mapping.

Features

- *Features an impressive collection footprint of 92 megapixels (11,704 x 7,920 pixels pan).*
- *Advanced camera electronics provide the same maximum frame rate at 2.0 seconds, which increases the forward overlap at a given GSD and speed.*
- *1:2.20 pan-to-color ratio delivers brilliant true-color and color-infrared (CIR) image quality with unmatched radiometric range.*
- *Short frame interval allows multi-ray photogrammetry even for large-scale mapping at low altitude and high aircraft speed; forward overlaps of 80% are achieved at a 10 cm pixel size at 154 knots.*
- *High level of detail with no blur due to Forward Motion Compensation (FMC) using Time Delayed Integration (TDI).*
- *Removable storage units provide two benefits: the length of missions is limited only by the constraints of the aircraft; ground time is minimized.*
- *Fully embedded GPS/INS/FMS solution called UltraNav available as an option.*
- *An integrated package that contains computing and solid-state storage sub-systems in the sensor head, as well as UltraNav, an optional embedded GPS/INS/FMS system, providing flexibility for onboard orientation of equipment.*
- *Weight of UltraCamLp sensor head is approximately 55 kg.*
- *Panchromatic Focal Length: 70 mm, Color and NIR 33 mm.*

Contact Us

Microsoft Photogrammetry Division • Anzengrubergasse 8, 8010 Graz, Austria www.iFlyUltraCam.com | mpsinfo@microsoft.com

www.iFlyUltraCam.com

© 2013 Microsoft Corporation. All rights reserved. Microsoft, UltraMap, UltraCam, UltraCam Eagle, and UltraNav are either registered trademarks or trademarks of Microsoft Corporation in the United States and/or other countries.

Microsoft

UCX-B-E-713-1.0-A4

SpectroCam™

Multispectral Camera | SWIR

PIXELTEQ

micro-patterned filters | sensors | cameras

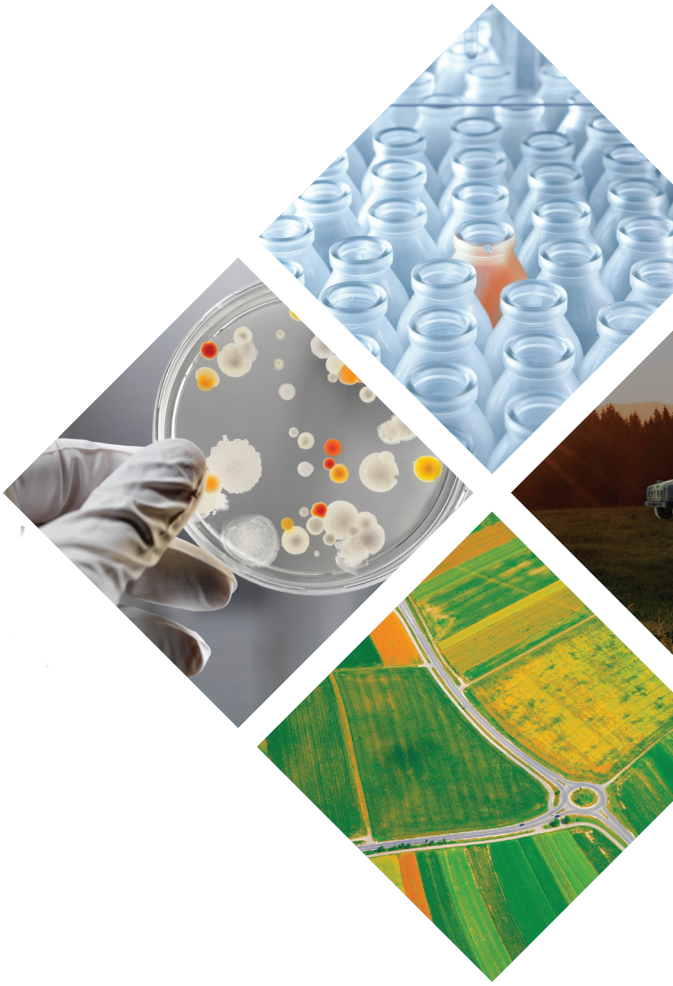

Sequential 6-band multispectral imager

500 - 1700nm

SpectroCam Short Wave InfraRed (SWIR) multispectral cameras deliver sequential full-frame images for up to 6 spectral bands between 500 – 1700nm at rates up to 30 frames per second (~5 stacks per second). Using standard and custom interchangeable filters, SpectroCam images the spectral bands fit to your specific applications. These cameras incorporate a high-sensitivity solid state InGaAs sensor, available in SWIR (1000 – 1700nm) and VIS-SWIR (500 - 1700nm) versions with resolution up to 640 x 512 pixels. SpectroCam multispectral cameras are flexible platforms that simplify development and shorten design time. The SpectroCam SWIR camera is configurable to support a variety of wavelength ranges (SWIR, NIR-SWIR, VIS-SWIR), lenses (F-mount standard), and image formats. Also available in customized OEM modules for easy integration into handheld spectral devices and instruments.

pixelteq.com

Spectral response

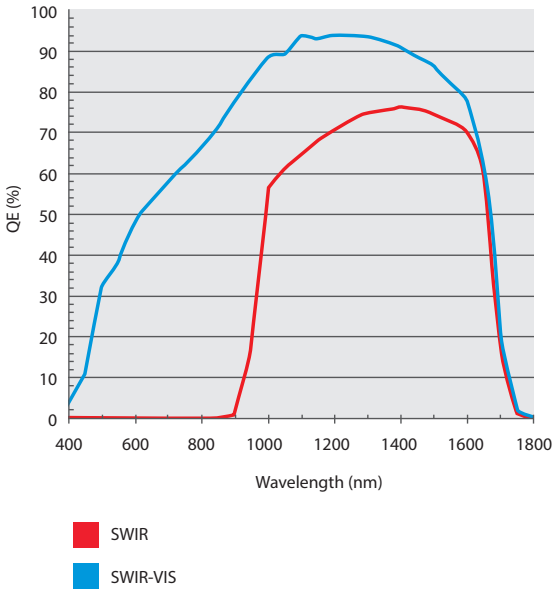

Dimensions

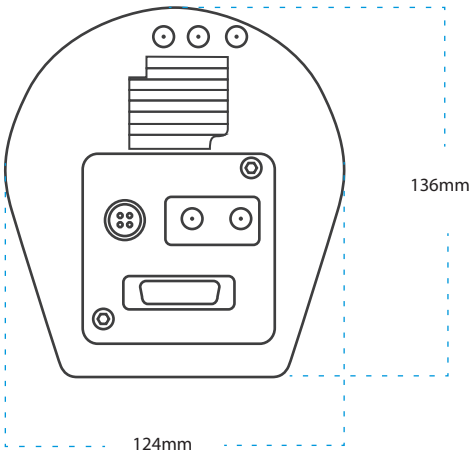

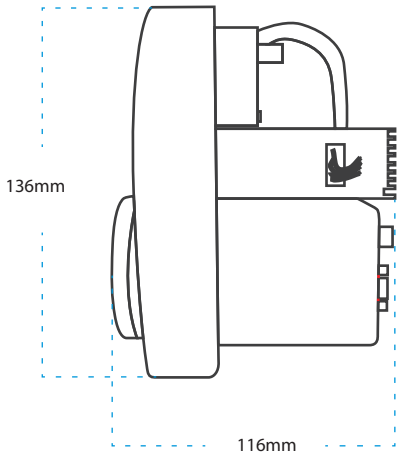

Specifications

Spectral response	VIS-SWIR 500 - 1700nm *(640 x 512 px)*	VIS-SWIR 500 - 1700nm *(320 x 256 px)*	SWIR 1000 - 1700nm *(320 x 256 px)*
Sensor	Solid State InGaAs 15µm pixel pitch	Solid State InGaAs 30µm pixel pitch	Solid State InGaAs 30µm pixel pitch
Active area	9.6 x 7.68mm		
Frame rate	up to 30 Hz		
Optical interface	F mount standard; range of lenses available *(adapters available on request)*		
Digital output	CameraLink, 14 bit		
Image enhancement	Automated gain control (AGC) Non Uniformity Correction (NUC): 3-point (offset, gain & dark current) Pixel correction		
Trigger interface	trigger IN and OUT - TTL compatible		
Dimensions	136mm H x 124mm W x 116mm D "(5.4" H x 4.9" W x 4.6" D)"		
Operating Temp.	-20°C to +55°C (-4°F to +131°F)		

Benefits

- Sequential 6-band multispectral imaging
- Broad VIS, NIR, SWIR imaging with single camera
- Up to 30 frames/second acquisition for persistent video
- Flexibility of interchangeable standard & custom filters
- 14-bit CameraLink output supports high speed digital video
- On-board AGC & NUC delivers quality images in day & night lighting

Applications

- Aerial & remote sensing
- Authentication & surveillance
- Biomedical imaging & instrumentation
- Low-light obscured vision enhancement
- Semiconductor & solar panel inspection

OEM Custom Options

- Application-specific spectral bands
- Sensor / camera / housing options
- Mechanical & environmental requirements
- Proof of concept prototypes to high volume

Contact an Application Engineer to discuss your specific application.

+1.303.273.9700 (americas) +86.10.5126.1868 (china) **info@pixelteq.com**
+31 263831707 (europe) +91.22.6708.0420 (india) **pixelteq.com**

PIXELTEQ

Ageing research has hit bumps in the past decade, as companies marketing drugs touted to prolong life have gone bust (see *Nature* **464,** 480–481; 2010). But organizers of the TAME trial think that the field is now in a better position because animal studies have shown that some drugs and lifestyle practices can extend life by targeting physiological pathways[1].

For instance, the NIA-sponsored Interventions Testing Program, in which investigators at three sites are systematically trialling candidate age-delay treatments, has shown that a handful of interventions convincingly and reproducibly prolong the lives of various strains of mice. Those include cutting down on calorie intake and taking a drug called rapamycin that is used to prevent rejection of transplanted organs.

And researchers from the Novartis Institutes for Biomedical Research in Cambridge, Massachusetts, reported in December that elderly people develop a stronger immune response to an influenza vaccination if they also take a rapamycin-like drug[2]. Rapamycin, which acts on a biological pathway involved in cell growth, is now seen as one of the most promising drugs for delaying ageing, but given over long periods of time it also suppresses the immune system.

SAFETY FIRST

The TAME test is for metformin, which suppresses glucose production by the liver and increases sensitivity to insulin. The drug has been used for more than 60 years and is safe and prolongs healthy life and lifespan in worms[3] and in some mouse strains[1]. Data also suggest that it could delay heart disease, cancer, cognitive decline and death in people with diabetes[4]. Plans call for the trial to enrol 3,000 people aged 70–80 years at roughly 15 centres around the United States. The trial will take 5–7 years and cost US$50 million, Barzilai estimates, although it does not yet have funding.

Matt Kaeberlein at the University of Washington, Seattle, who is running a trial of rapamycin in elderly dogs, says that the concept behind Barzilai's trial is sound. Even though other drugs might be more effective at delaying ageing in animal studies, he says, the many years of experience with metformin in people, combined with data suggesting that it impacts the ageing process in people, make it a good candidate for a first clinical trial in the field.

"It's a smart way to engage the FDA in a discussion about recognizing ageing as an indication that is appropriate for clinical trials," Kaeberlein says. ■

1. Miller, R. A. *et al. J. Gerontol A Biol. Sci. Med. Sci.* **66A,** 191–201 (2010).
2. Mannick, J. B. *et al. Sci. Transl. Med.* **268,** 268ra1179 (2014).
3. Onken, B. & Driscoll, M. *PLoS ONE* **5,** e8758 (2010).
4. Bannister, C. A. *et al. Diabetes Obes. Metab.* **16,** 1165–1173 (2014).

Infrared technologies are subject to tight restrictions because of their military applications.

MOISES SAMAN/MAGNUM

TECHNOLOGY

US 'export rules' threaten research

Proposed updates to national-security regulations would restrict collaboration with foreign scientists and industry.

BY ALEXANDRA WITZE

The US government is considering policy changes that could dramatically affect how researchers handle equipment and information that have national-security implications. Among other impacts, scientists would need to reconsider what they can discuss with graduate students from other countries, or when travelling abroad on work trips.

One set of rules would affect technologies such as infrared detectors, which are commonly used for environmental and other types of monitoring but can fall under military restrictions because of their night-vision capabilities. Another set of proposed rules would revise the government definition of "fundamental research" in ways that could affect any scientist who collaborates with industrial partners.

The proposals are part of a long-running effort to overhaul Byzantine regulations that seek to prevent certain information and technologies from reaching countries perceived to be hostile by the United States. These 'export control' rules can create a major — even perilous — headache for US researchers. In 2012, a plasma engineer at the University of Tennessee in Knoxville began serving a four-year jail sentence for violating these rules by working with graduate students from China and Iran while on a US Air Force contract.

Public-comment periods on the proposed rules close on 6 July and 3 August, and science groups are trying to raise awareness of what is at stake. "Once the rules get put in place, it's very hard to dial back if you find them overly aggressive," says Gregory Quarles, a physicist

© 2015 Macmillan Publishers Limited. All rights reserved

and board member of the Optical Society, a professional organization in Washington DC that is encouraging its members to study the rules and weigh in with any concerns.

Export control covers both physical equipment that leaves the United States — such as spacecraft components on their way to a launch site, or a laptop computer carrying sensitive information to a conference — and information conveyed to someone from another country. There are two parallel lists that describe which items are controlled, one maintained by the US Department of State and the other by the Department of Commerce. Over the past five years, regulators have been working to relax the system, moving some items from the restrictive state-department list — commonly known as ITAR, for International Traffic in Arms Regulations — to the less tightly controlled commerce-department list. But they have left some of the hardest topics for last.

On 5 May, the departments released the first set of long-awaited proposals for regulating the category that includes sensors and night-vision equipment. Many researchers hoped these would loosen current regulations that they say have impeded research, but that does not seem to be the case. The rules specify performance parameters, such as wavelengths for infrared cameras, that would continue to restrict commercially available sensors that are popular with many researchers for environmental, medical and other applications.

At the University of Rochester in New York, astronomer Judith Pipher develops infrared detectors to observe the cosmos, which are regulated under ITAR because military night-vision goggles also use infrared sensors. Astronomical sensors detect radiation that is one million times less intense than that detected by the military, but neither the current nor the proposed rules take that into account. "I don't think this particular reform is going to get us there," says Pipher, who, before she acquired US citizenship, was once barred from seeing data gathered by infrared instruments that her team was testing.

"We've heard from at least a few institutions that this will totally stifle their ability to work with industry."

The second set of proposed rules could have wider-reaching consequences. It aims to harmonize state and commerce department definitions of terms such as "fundamental research" and "public domain".

In general, the rules state that information developed through fundamental research is considered to be in the public domain and not subject to ITAR controls. But one newly added phrase says that if the research is subject to proprietary review before being published, such as by a company that sponsored the work, then it falls under ITAR.

"We've heard from at least a few institutions that this will totally stifle their ability to work with industry," says Tobin Smith, vice-president for policy at the Association of American Universities in Washington DC.

Any university researcher who has a contract or sponsored research agreement with a company could face a huge load of paperwork. "It will fundamentally change the way we do business," says Elizabeth Peloso, associate vice-president and associate vice-provost for research services at the University of Pennsylvania in Philadelphia.

The new rules would add some needed changes, she adds, such as clarifying that a US researcher can e-mail data to a collaborator elsewhere in the world, as long as those data are encrypted.

After the comment periods close, the state and commerce departments will either issue another round of interim rules for more feedback, or publish whatever final regulations they decide on.

"You asked for reforms, so now you got it," says Kevin Wolf, who oversees the export control reform effort at the commerce department. "If you're an export nerd, now is an exciting time." ■

© 2015 Macmillan Publishers Limited. All rights reserved

HySpex

High resolution, high speed hyperspectral cameras for laboratory, industrial and airborne applications

HySpex Main Specifications

Back to normal page

The below specifications are subject to change, due to on-going development.

	VNIR-640	VNIR-1600	SWIR-320i	SWIR-320m	SWIR-320m
Detector	SSi CCD 640 x 480	SSi CCD 1600 x 1200	InGaAs 320 x 256	HgCdTe 320 x 256	HgCdTe 320 x 256
Spectral Range	0.4-1.0 µm	0.4-1.0 µm	0.9-1.7 µm	1.3-2.5 µm	1.0-2.5 µm
Spatial Pixels	640	1600	320	320	320
FOV across track*	18.4°	17°	14°	14°	13.5°
Pixel FOV across/-along track*	0.5 mrad/ 0.5 mrad	0.18 mrad/ 0.36 mrad	0.75 mrad/ 0.75 mrad	0.75 mrad/ 0.75 mrad	0.75 mrad/ 0.75 mrad
Spectral sampl.	5 nm	3.7 nm	5 nm	5 nm	6 nm
# of bands	128	160	145	240	256
Binning modes	1, 2, 4	2, 4, 8	-	-	-
Digitization	12 bit	12 bit	12 bit (CL:14)	14 bit	14 bit
Max frame rate**	500 fps	135 fps	350 fps	100 fps	100 fps
Seansor head wgt.	3.5 kg	4.6 kg	6.8 kg	7.0 kg	7.5 kg
Sensor head dim. (lwh in cm)	31.5x8.4x13.8	31.5x8.4x13.8	32x14x15.2	36x14x15.2	36x14x15.2
Sensor head pwr. cons.	~6 W	~6 W	~30 W	~100 W	~100 W
FPA cooling T	-	-	~260K	~195K	~195K

* Can be doubled with field expander. ** At full resolution. Can be increased by binning/subwindowing.

HySpex

The HySpex cameras are based on know-how acquired by NEO since 1995 through several R&D projects (initially defence and space applications) in the field of imaging spectrometry. Today, NEO continues research and product development in close collaboration with companies and research institutes utilising the HySpex cameras in a wide range of applications.

HySpex, NEO's line of hyperspectral cameras, aims to be a compact, high performance and versatile instrument for a multitude of applications, ranging from airborne to laboratory and industrial use of imaging spectroscopy.

Some of the main features of the HySpex design are:

- Minimization and equalization of point spread function across the FOV and throughout the wavelength range.
- Good matching of point spread function with pixel size.
- Low stray light level.
- Low smile effect and spectral keystone effect.
- Low polarization dependence.
- 2nd order suppression.
- High sensitivity and low noise.
- Automatic shutter
- High acquisition speed and data rates.
- Real time correction of responsivity and dark offset.
- Close-up lenses for operation at short object distances are available.

- Field expanders for doubling the FOV are available.

All HySpex instruments are delivered with:

- A dedicated camera control and data acquisition software package.
- Spectral and radiometric calibration data.
- A detailed test report.
- Users manual and necessary accessories such as cables, power supply and frame grabber.
- Optionally, an API (Application Programming Interface) in Visual C++ can be supplied for application specific software development.
- Exact synchronization with external events (e.g. navigation systems or illumination) is possible through TTL level trigger signals.

In case the HySpex specifications don't meet the requirements of your application, please contact us. NEO designs and delivers customized solutions.

A World Class Supplier of CMOS Sensors™

NIT Cameras and Modules: Visible, SWIR and Intensified (ICMOS)

Ease your design with Native WDR™

Native WDR™

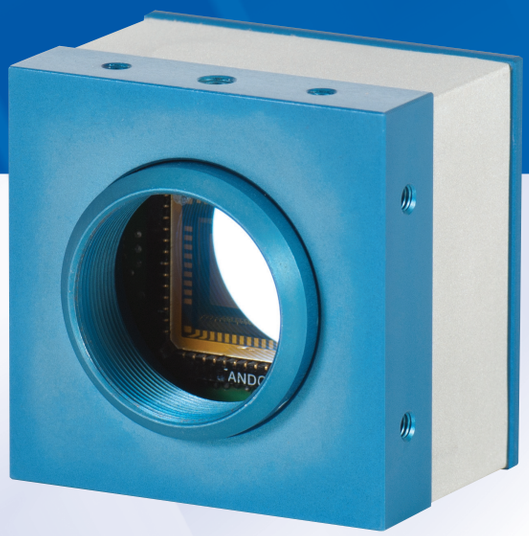

USB 2.0

USB 3.0

Composite Video

www.new-imaging-technologies.com

HDR InGaAs Cameras

NIT HDR InGaAs cameras integrates the native WDR InGaAs sensor family, offering a Short Wave Spectral response, 900nm -1.7µm, with a Very High Dynamic Range of 140dB, in real time. The NIT HDR InGaAs cameras are available as complete cameras with an aluminum housing or as a OEM modules.

All cameras/modules are delivered as a turn-key packaging, including, cables and Magic View Software SDK package allowing thus a quick and easy integration in any equipment or platform.

Our Cameras & modules are available under the following form and format:

- USB 2.0 output - used with Magic View SDK Software
- Analog TV composite output – 50 Hz PAL or 60 Hz NTSC – NUC & BPR embedded – Direct connection to a TV monitor

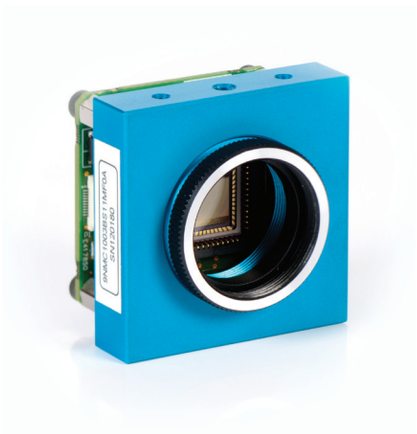

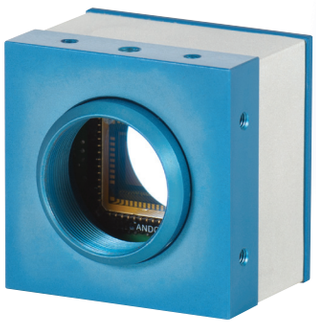

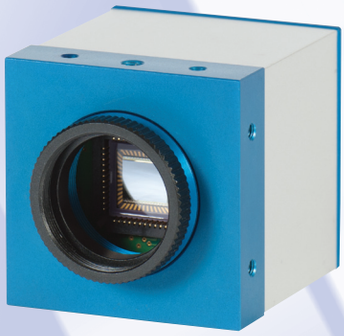

Camera	Resolution	Output	Frame rate	ADC	Operation mode	Dynamic range
Widy SWIR 320A	320x256	Analog TV	50/60 fps	-	Rolling shutter	140 dB
Widy SWIR 320U	320x256	USB 2.0	140 fps	14 bit	Rolling shutter	140 dB
Widy SWIR 640A	640x512	Analog TV	50/60 fps	-	Rolling shutter	140 dB
Widy SWIR 640U	640x512	USB 2.0	60 fps	14 bit	Rolling shutter	140 dB

HDR Intensified Module

The NIT HDR Intensified modules are designed for very low light conditions without sacrificing the scene dynamic range. Each photon is multiplied by the Intensifier tube and then collected by the HDR CMOS sensor via an optical fiber (ICMOS).

The HDR capabilities of our sensors overcome the current saturation seen on CCD intensified solutions and guarantee an optimal identification in light changing conditions.

The HDR intensified solutions can be delivered as OEM module (without the I² tube) or as a complete night vision camera, i.e : including an I² tube.

The intensified cameras are available under the following format:

- Analog TV composite output – 50 Hz PAL or 60 Hz NTSC
  Direct connection to a TV monitor
- Single USB 3.0 output – For high resolution version
  Can be used with our Magic View Software.

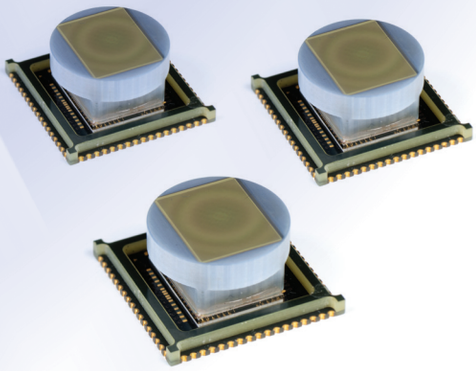

Camera	Resolution	Output	Frame rate	I² tube	Dynamic range
Widy IntenS 768A	768x576	Analog TV	50/60 fps	XD4 (Gen 2)	140 dB
Widy IntenS 1280V	1280x1024	USB 3.0	60 fps	XR5 (Gen 2+)	140 dB

Evaluation Kits
for WDR visible CMOS sensors

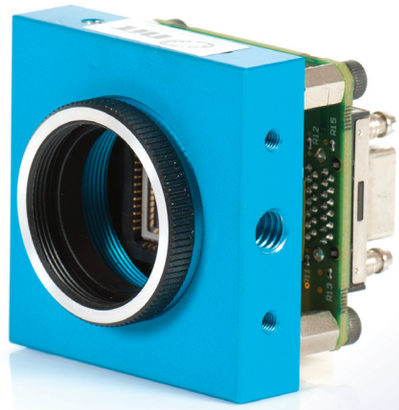

NIT's Evaluation Kits are designed for users willing to evaluate the performances of our sensors without building complete camera sets. Our evaluation kits offer USB 2.0 output, USB 3.0 output, or even CameraLink output.

The cameras can be provided with full aluminum housing or as OEM modules.

Stereoscopic versions with different baselines are also available.

For more information, please visit our website.

Native WDR™

Welding control,
Soldering process...

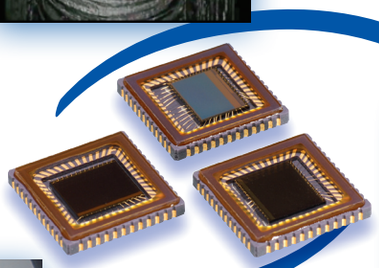

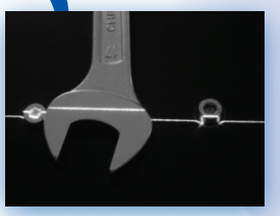

Beam profiling,
Laser metrology,..

Outdoor applications..

A World Class Supplier of CMOS Sensors™

New Imaging Technologies

1-4 impasse de la noisette
91370 Verrières le Buisson • France
www.new-imaging-technologies.com

sales@pembrokeinstruments.com

nIT

A World Class Supplier of CMOS Sensors™

Innovative WDR ROIC for IR

Application to SWIR photodiodes

sales@pembrokeinstruments.com

A World Class Supplier of CMOS Sensors™

Technology Brief

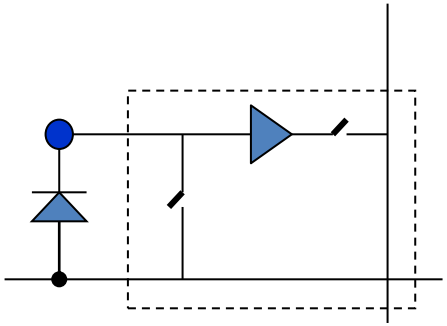

MAGIC™

- ❑ **Photodiode in photovoltaic mode** (voltage reading)
- ❑ **Logarithmic** mode with large dynamic range (**> 140dB**)
- ❑ Light Intensity measurement with **no integration, no saturation**
- ❑ **Low dark current** (accurate zero) and **FPN** (no visible FPN with Si)
- ❑ Adapted to any photodiode polarity (P-on-N or N-on-P)

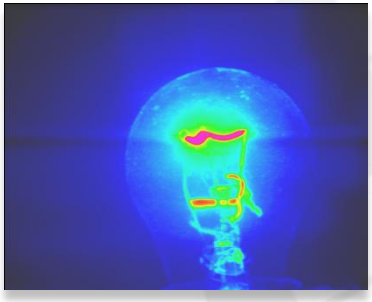

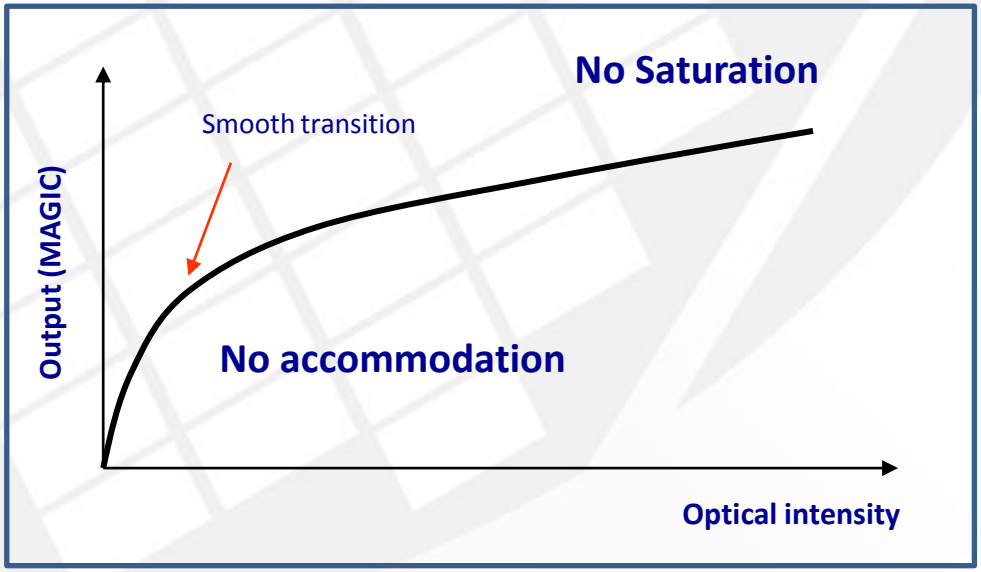

sales@pembrokeinstruments.com

A World Class Supplier of CMOS Sensors™

WDR InGaAs

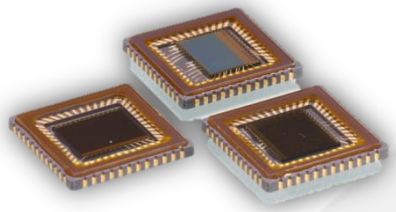

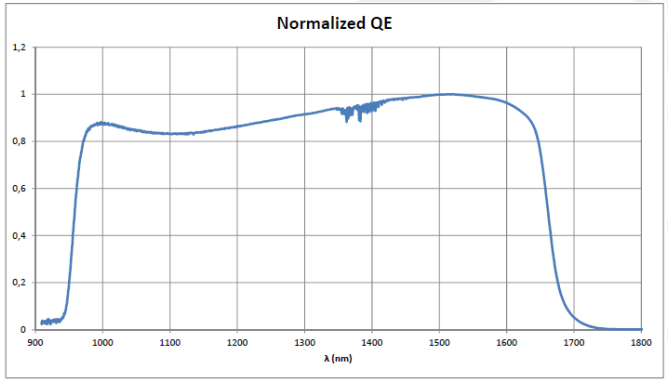

- Resolution: 320x256 25µm
- Material: InGaAs photodiode
- Spectral wavelength: 900nm-1700nm
- Operating mode: Rolling shutter
- Dynamic Range: 140 dB
- NEI: <300 photons
- QE: >80%
- Packaging: CLCC48

sales@pembrokeinstruments.com

A World Class Supplier of CMOS Sensors™

WDR InGaAs (ii)

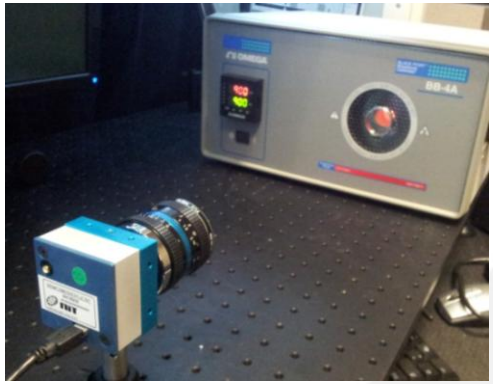

- Logarithmic response (V) with no saturation
- Fully compatible with radiometric measurement application
- Evaluation camera available in USB, Analog* and Camlink

** <250mW*

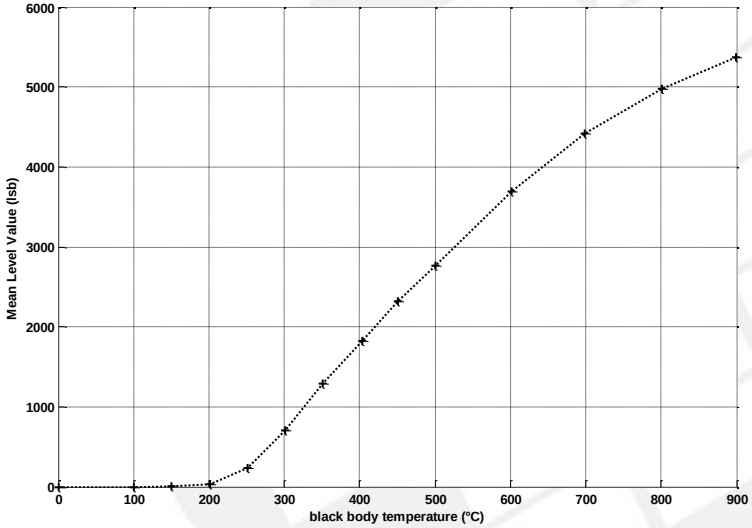

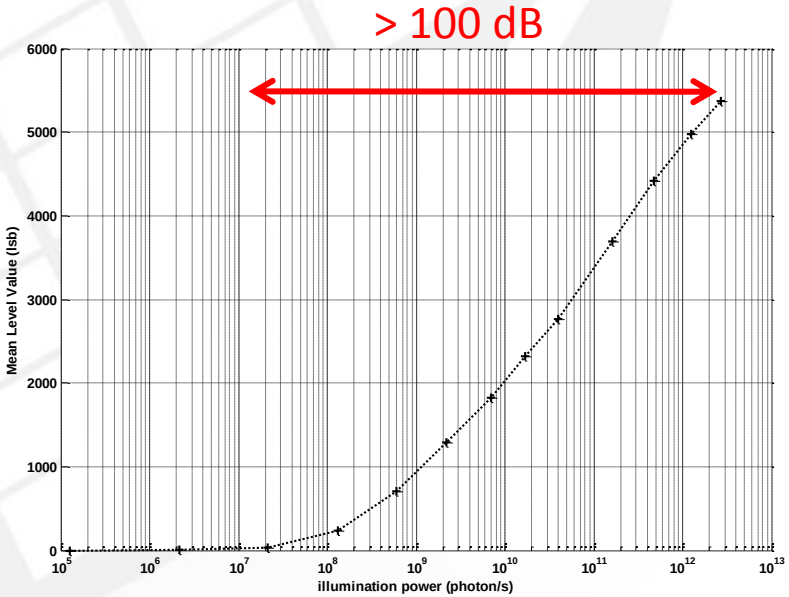

sales@pembrokeinstruments.com

WiDy SWIR Camera

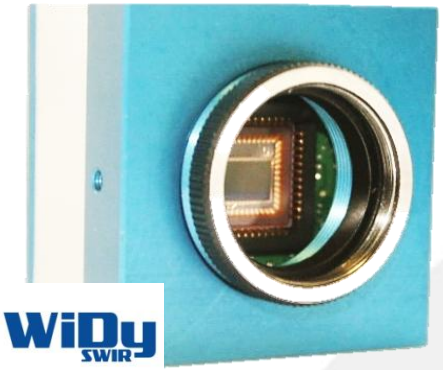

Resolution:	320 x256 25 µm (0.9-1.7µm)
Dynamic Range:	140dB
Frame rate:	Settable up to 150fps
Data output:	14bits (USB2.0)
Compatibility:	Windows XP, 7 and 8
Operating T°C:	0°C to + 50°C
Dimensions:	46 X 46 X 32 mm
Weight:	110 g
Features:	TECless (1.5 W), 1 point NUC RAW , .avi, .bmp recordings

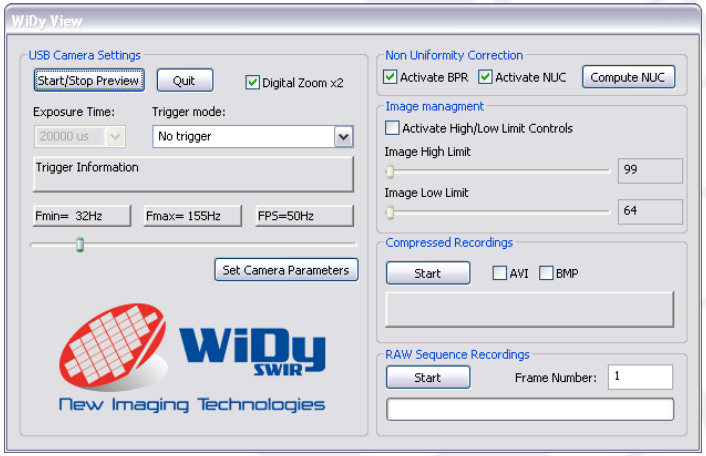

Widy View Interface software

sales@pembrokeinstruments.com

A World Class Supplier of CMOS Sensors™

Movies

New Imaging Technologies

optec

Near-infrared cameras based on InGaAs sensors have found wide use in industrial inspection, telecommunications, thermal monitoring and research. To address the special requirements of this optical band, Optec has designed a large selection of lenses optimized for both the wavelengths properties of the sensors used to detect them.

Features of Optec SWIR Lenses

The SWIR band most often used extends over the 900-1700 nm range. In some cases, the long wavelength end of the band may extend to 2500 or even 3000 nm. Optec offers lenses to cover all of these ranges. All Optec SWIR lenses share these features:

- Antireflectance coatings optimized for high SWIR transmission
- Designs using new non-toxic glasses
- Low chromatic aberration across the SWIR band
- Long back focal distance for ease of camera design
- Rugged construction of focus and iris mechanisms for long life
- Resolution matched to imager pixels for low aliasing

Learn more about SWIR imaging

Optec SWIR Lens Product Lines

Optec offers a broad selection of SWIR lenses for general and specialized applications. The new series are ideal for use with larger sensors and smaller pixels. All of these lenses are available coated for 900-1700nm, 1700-2300nm or 900-2300nm use.

f/1.4 with 20.5

- Focal lengths – 25, 35, 50, 75, 100 mm
- All models f/1.4
- 20.5 mm image diameter

mm image circle

- 45% modulation at 25 lp/mm
- Canon FD, Nikon F or 42 mm thread mount
- C-mount adapters available

More...

---

f/2 with 20.5 mm image circle

- Focal lengths – 25, 35, 50, 75, 100 mm
- All models f/2
- 20.5 mm image diameter
- 45% modulation at 25 lp/mm
- Canon FD, Nikon F or 42 mm thread mount
- C-mount adapters available

More...

---

f/4 with 20.5 mm image circle

- Focal lengths – 25, 35, 50, 75, 100 mm
- All models f/4
- 20.5 mm image diameter
- 45% modulation at 25 lp/mm
- Canon FD, Nikon F or 42 mm thread mount
- Low-cost models without iris available
- C-mount adapters available

More...

---

f/2 with 16 mm image circle

- Focal lengths – 25, 35, 50, 75, 100 mm
- All models f/2
- 16 mm image diameter
- 40% modulation at 25 lp/mm
- Canon FD mount
- C-mount adapters available

More...

Long focal lemgth lenses

- Focal lengths – 200, 300, 500, 1000 mm
- 20.5 mm image diameter (most models)
- High modulation at sensor Nyquist
- Canon FD mount
- C-mount adapters available
- Motorized models available

More...

Lenses with variable focal length

- 75-500 mm zoom available
- 100/200 mm dual FOV model
- 20.5 mm image diameter
- High modulation at sensor Nyquist
- Canon FD mount
- C-mount adapters available
- Fully motorized

More...

Visible and SWIR lenses

- 25 mm focal lemgth, f/1.7
- Coated and corrected for 400-1700 mm
- 11 mm image diameter
- 45% modulation at 50 lp/mm
- Canon FD, Nikon F or 42 mm thread mount
- C-mount adapters available

More...

Lenses for Special Situations

- Focal lengths to 300 mm
- Low-cost f/4 C-mount models
- Infrared optical processing couplers
- Focal length extenders

More...

f/1.4 series SWIR lenses | F/2 Series SWIR lenses | F/4 Series SWIR lenses | f/2 with 16 mm
Long Focal Length Lenses | Variable Focal Length Lenses | Visible & SWIR lenses | Special Situation Lenses

Optec also makes multi-channel SWIR prisms – Information here

Visit the Optec website

NEW!

CS-15000 Aerial Digital Camera System

Wide Area Mapping & Film Replacement

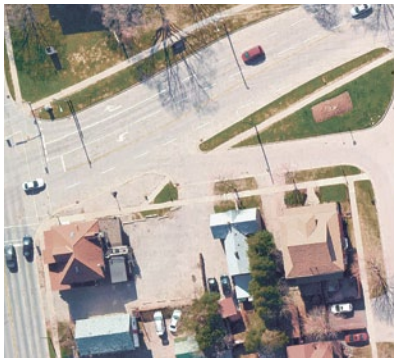

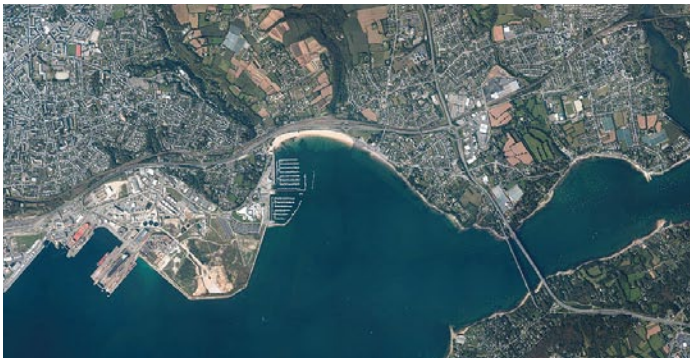

Applications

- Large mapping projects
- Stereo compilation
- DTM, DSM, DEM
- Contour generation

Advantages

- Adaptable & scalable
- Fast post-processing & tonally balanced mosaics
- Large acquisition window
- Configurable with IR and other sensors

Unique Features

- Field-replaceable shutters
- True FMC for superior image quality
- Interchangeable lenses
- Superior GSD sensor

The CS-15000 offers the traditional details of film with the proven efficiency of digital technology.

15,000 x 10,000

With a large footprint of 15,000 pixels across by 10,000 pixels along the flight line, the CS-15000 is the perfect aerial digital camera system for covering large areas efficiently. It is the optimal replacement for film-based cameras or as an addition to your existing digital cameras.

The CS-15000 features a large footprint, combined with the unique and proven true Forward Motion Compensation (FMC) design, True Color acquisition, and simplified architecture supported by a dependable and reliable acquisition system. The CS-15000 also offers a wide range of interchangeable lenses as well as the ability to fly with or without the simultaneous acquisition of near-infrared images, making the CS-15000 highly flexible and scalable to your specific projects and applications.

This highly capable and sophisticated sensor was born out of collaboration among remote sensing technology, electronics and photogrammetry experts in Optech's US and EU offices, resulting in a design that maximizes the value of your investment.

The CS-15000 is a complete solution that provides business value... every time!

Large Survey

Contour Generation

Simultaneous Infrared

Optech

www.optech.com

CS-15000 Aerial Digital Camera System

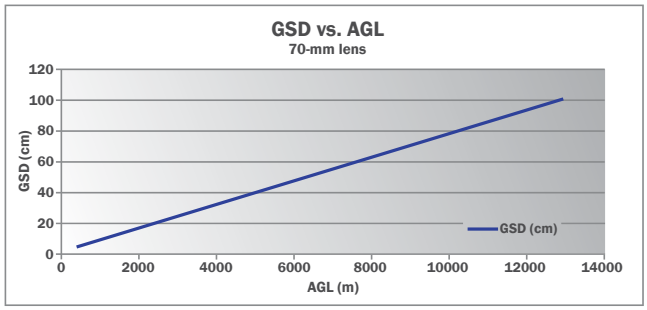

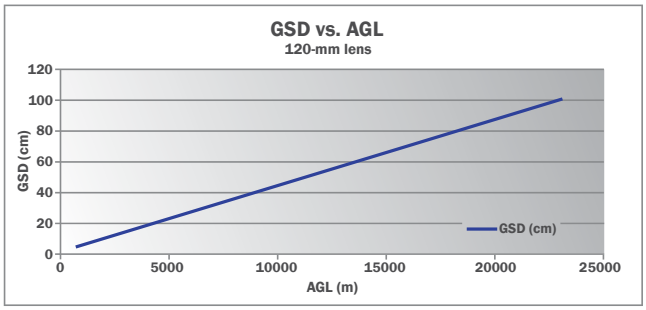

Parameter	Specification
Camera Module CSM-15	
Sensor type	Two 80-Mpix full frame CCDs, RGB
Sensor format (H x V)	15000 x 10000 pixels
Pixel size	5.2 x 5.2 µm
Frame rate	1 frame/2 sec.
FMC	Electro-mechanical, driven by piezo technology (patented)
Shutter	Field-replaceable focal plane 1/125 to 1/800 sec (patented)
Aperture	Iris mechanism, f-stops: 4,5.6, 8, 11, 16
Lens	70 mm/120 mm/210 mm
Filter	Color and near-infrared removable filters
Dimensions (H x W x D)	245 x 315 x 185 mm (70-mm lens)
Weight	~14 kg
Camera Frame CSF-15	
Structure	Cylindrical frame with thermal and vibrational isolation
Diameter	400 mm
Weight	~45 kg including CS modules
Camera Controller CSC-T	
Number of supported cameras	Up to three CS modules
Removable storage unit	4 solid state drives (300 GB each factory standard, 600 GB optional)
Power consumption	~190 W and 28 VDC input (with one CSM-15)
Dimensions	6U 1/2 rack; 267 x 224 x 493 mm (behind flange)
Weight	~17 kg
Image Pre-Processing Software	
PixelPhysics	Radiometric control and format conversion, TIFF or JPEG
CS-Merge	Radiometric and geometric frame merging
Image output	~15000 x 10000 pixels; 8 or 16 bits per channel (429 MB or 858 MB per image)

U.S. Patent No. 7,899,311
U.S. Patent No. 7,365,774 B2
European Patent No. EP 1 570 314 B1

Optech Incorporated
300 Interchange Way, Vaughan ON, Canada L4K 5Z8
Tel: +1 905 660 0808 Fax: +1 905 660 0829
www.optech.com

© Optech Incorporated. E&OE. Information subject to change without notice. Printed in Canada. 120314

Princeton Instruments

PRELIMINARY

PI-MAX4: 512EM

The PI-MAX4: 512EM from Princeton Instruments is the next generation, fully-integrated scientific intensified CCD camera (ICCD) system featuring a 512 x 512 frame transfer EM CCD fiberoptically coupled to a variety of Gen II and Gen III filmless intensifiers. The intensifiers offer the highest possible sensitivity from UV to NIR and offer resolution that is ideally matched to the CCD. Nanosecond gating capability and an integrated programmable timing generator (SuperSYNCHRO™) built into the camera make these ICCD cameras ideal for time-resolved imaging and spectroscopy applications. **PI-MAX4:512EM is the only ICCD camera in the market today to offer both high frame rate at 10MHz/16-bit digitization, 1 MHz sustained gating repetition rate and exceptional sensitivity.**

FEATURES	BENEFITS
Dual Gain - Image Intensifier and CCD	Highest gain in scientific intensified camera; Provides photon counting capability with total system gain of > 10,000
512 x 512 Imaging Array	High resolution imaging and spectroscopy
10 MHz / 16-bit digitization	Video frame rates and higher to efficiently synchronize with high repetition rate lasers
Thermoelectric cooling	Reduces CCD dark current to negligible levels
Photocathode cooling	Reduces EBI of the photocathode by as much as 20x
A selection of Intensifiers *Gen II* *Gen III filmless*	Best sensitivity and gate speed in the desired wavelength range; Best combination of UV-Blue sensitivity and fast gating (SB); RB provides wide spectral coverage Offers highest sensitivity and fastest gate speed
Fiberoptic coupling	Highest optical throughput; No vignetting
Sub-nanosecond gating	Provides <500 nsec gate width with standard fast gate intensifiers while preserving QE for high temporal resolution; For effective background discrimination, kinetics imaging and spectroscopy
Super HV™ - Built-in high voltage pulser	Rugged design for high rep rate gating and minimal insertion delay
SuperSYNCHRO™ - Built-in programmable timing generator	Built-in, fully software controlled gate timing; Controls gate widths and delays in linear, or exponential increments; Low insertion delay (25 nsec). *See page 3 for more info.*
MCP gating	Provides < 8 nsec gate width for slow gate intensifiers while preserving high QE
Bracket pulsing™	Preserves high ON/OFF ratio of the Gen II intensifier in the UV - No sync pulse required
GigE interface	Industry standard for fast data transfer over long distances
LightField™ for 64-bit Windows 7, or WinSpec for 32-bit Windows	Flexible software packages for data acquisition, display and analysis; LightField offers intuitive, cutting edge user interface, IntelliCal™ and more
PICAM* (64-bit)/PVCAM (32-bit) software development kits (SDKs)	Compatible with Windows 7*/XP, Vista and Linux; Universal programming interfaces for easy custom programming;
LabVIEW™ Scientific Imaging Tool Kit (SITK™)	Pre-defined LabView vis provide easy integration of the camera into complex experiment setup

Detector shown with a C-mount nose and lens, sold separately

Applications:

Fluorescence Lifetime Imaging Microscopy (FLIM), Time Resolved Imaging & Spectroscopy, Combustion, Planar Laser Induced Fluorescence (PLIF)

Princeton Instruments
PRELIMINARY

SPECIFICATIONS

CCD		
Image sensor	e2v CCD97; scientific grade; Front illuminated, Frame transfer CCD	
CCD format	512 x 512 imaging pixels; 16.0 x 16.0 µm pixels; 8.0 x 8.0 (18.5 mm diagonal)	
	EM mode	Normal CCD mode
System read noise (typical)	25 e- rms @ 5 MHz 50 e- rms @ 10 MHz Read noise effectively reduced to <1 e- rms with on-chip multiplication gain enabled	2.5 - 3 e- rms @ 100 kHz 6 e- rms @ 1 MHz 10 e- rms @ 5 MHz
Pixel full well (typical)	800 ke- (output node)	200 ke- (single pixel)
Dark current @ -25° C (typical)	< 2 e-/p/sec	
Deepest cooling temperature @ 20° C ambient	-25° C (Air) -30° C (Water assist)	
Vertical Shift Rate	600 nanoseconds/row	

INTENSIFIER							
Intensifiers available	18 mm - Gen II, Gen III filmless						
Method of coupling to the CCD	1.48:1 fiber optic						
Intensifier type	Gen II				Gen III *Filmless*		
	UV	SB	RB	SR	HB*f*	HQ*f*	HR*f*
Wavelength Range	See QE curves						
Min. Gate Width (Optical FWHM) * Sub-nanosecond Gate Fast Gate Slow Gate	< 500 ps (for Fast Gate tubes only) ~ 2 nsec (Typ), 3 nsec (Guar) < 50 nsec RB < 200 nsec for SB; < 8 nsec (with MCP gating)				< 500 ps (for Fast Gate tubes only) ~ 2 nsec (Typ), 3 nsec (Guar) -NA-		
Kinetics mode	600 nanoseconds/row time resolution						
Repetition Rate: Sustained	1 MHz; 6 kHz with MCP gating						
Resolution limit	40 to 64 lp/mm				57 to 64 lp/mm		
EBI Photo e-/pixel/sec @ room temp (with photocathode cooling)	0.05 - 0.2 (0.005 - 0.02)				0.02 (0.002)		
Phosphor	P43 (P46 optional)						
Operating Environment	+5° C to +30° C non-condensing						
Storage Environment	-25° C to +55° C						
Certification	CE						

All specifications subject to change. Contact your local sales representative for more information.

* Measured with 18 mm intensifier

Princeton Instruments
PRELIMINARY

SuperSYNCHRO™ Timing Generator

The PI-MAX4's integrated SuperSYNCHRO™ Timing Generator lets researchers set gate pulse widths and delays under GUI software control. The closed coupled SuperSYNCHRO significantly reduces the system delay inherent in the timing generator of ICCD cameras. The integrated timing generator means there is no need for an additional external timing generator, and a built-in Super HV high voltage pulser eliminates the requirement for an external high-voltage supply, making the PI-MAX4 camera one of the most advanced ICCD cameras on the market.

FEATURE	BENEFITS
Closed Coupled Design	Short signal paths for minimum insertion delays
On-board memory	Store and execute complex gate width/delay sequences with no software overhead
Internal oscillator *	Drive an external event and initiate repetitive experiments.
SyncMASTER Pulses	Independent continuous TTL outputs to trigger pulsed external devices, e.g. laser and Q-switch; Minimum experiment jitter
Configurable Trigger inputs	Synchronizes camera to a wide variety of standard and non-standard trigger sources.
Full Software Control	Easy setup and execution of complex gate width/delay sequences

SuperSYNCHRO Specifications

Internal Timing Generator	0.05 Hz - 1 MHz
Gate Delay + Width Range*	~0.01 ns to 21 sec (from T0)
Timing resolution/ Timing jitter	10 ps / 35 ps rms
Insertion delay	< 27 ns (trigger in to intensifier opening); < 225 ns (with MCP gating)
TRIGGER INPUTS	
External Sync (Trigger In)	-5 v to +5 v (including TTL); AC/DC coupling: 50 ohm / High Z Variable Threshold; +ve or -ve edge
Pre Trigger In	TTL input. A rising edge will stop CCD Cleans and set camera to wait for the external trigger for fastest response. User selectable option.
TRIGGER OUTPUTS	
$SyncMASTER_1$	Programmable continuous frequency output to synchronize external devices with PI-MAX4, e.g. Laser
$SyncMASTER_2$	Programmable continuous frequency output (delay from $SyncMASTER_1$ - 100 ns - 6.55 msec) synchronize external devices with PI-MAX4, e.g. Q-switch
T0	TTL Signal: T0 indicates start of timing sequence
Monitor	TTL signal to monitor actual gate timing
Ready	TTL signal. Represents camera status. It changes state when ready just before the exposure.
Aux	DC coupled programmable delay (Delay from T0 - 0.01ns - 1 sec) trigger output to synchronize external devices with PI-MAX4
Logic	Software programmable: Select one of the following signals: Acquiring, Image Shift, Logic 1, Readout, Shutter or Wait for trigger. *See users' manual for detailed signal descriptions.*

* Software programmable

Princeton Instruments
PRELIMINARY

Quantum Efficiency Curves

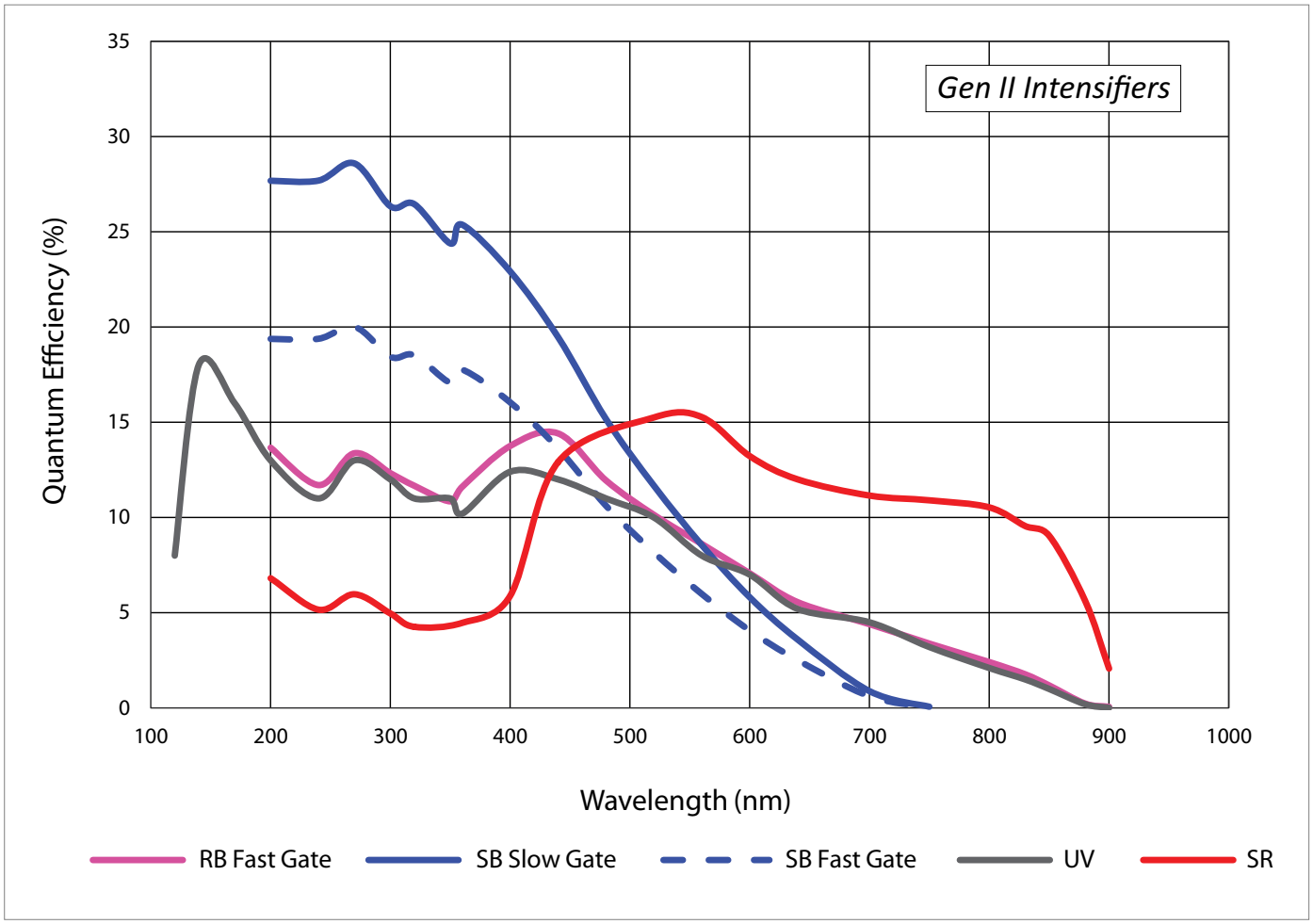

Princeton Instruments
PRELIMINARY

Quantum Efficiency Curves

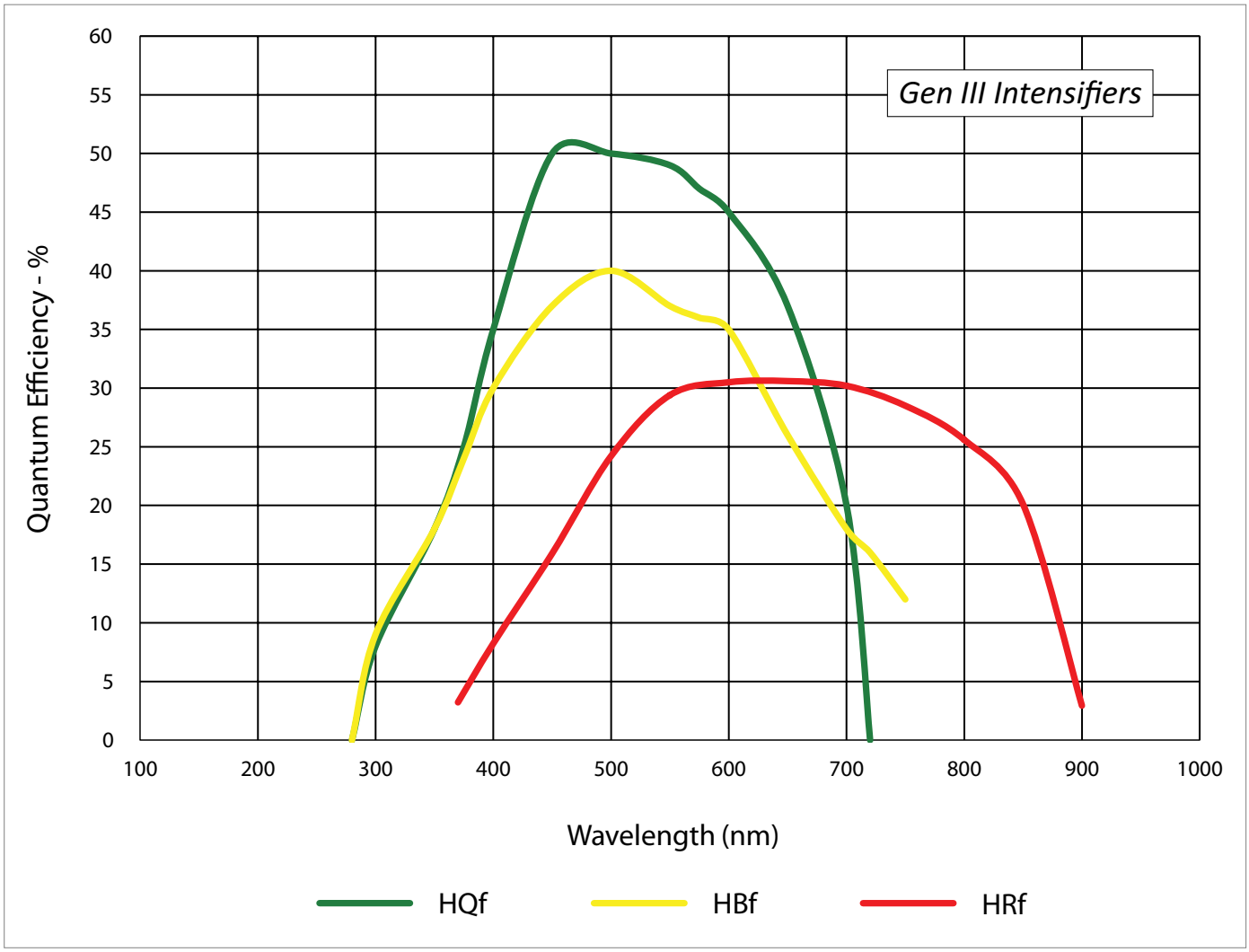

Frame Rate (fps)

ROI/Bin	512 x 512	256 x 256	128 x 128	64 x 64	32 x 32
1 x 1	34	66	126	227	385
2 x 2	66	125	222	370	559
4 x 4	124	217	357	526	667
8 x 8	213	333	476	606	689

NOTE: Frame rate measured at 10 MHz digitization and 450 nsec/row vertical shift. "Custom chip" mode increases frame rate at reduced ROI by 2x to 4x.

Princeton Instruments

PRELIMINARY

With "C" Mount

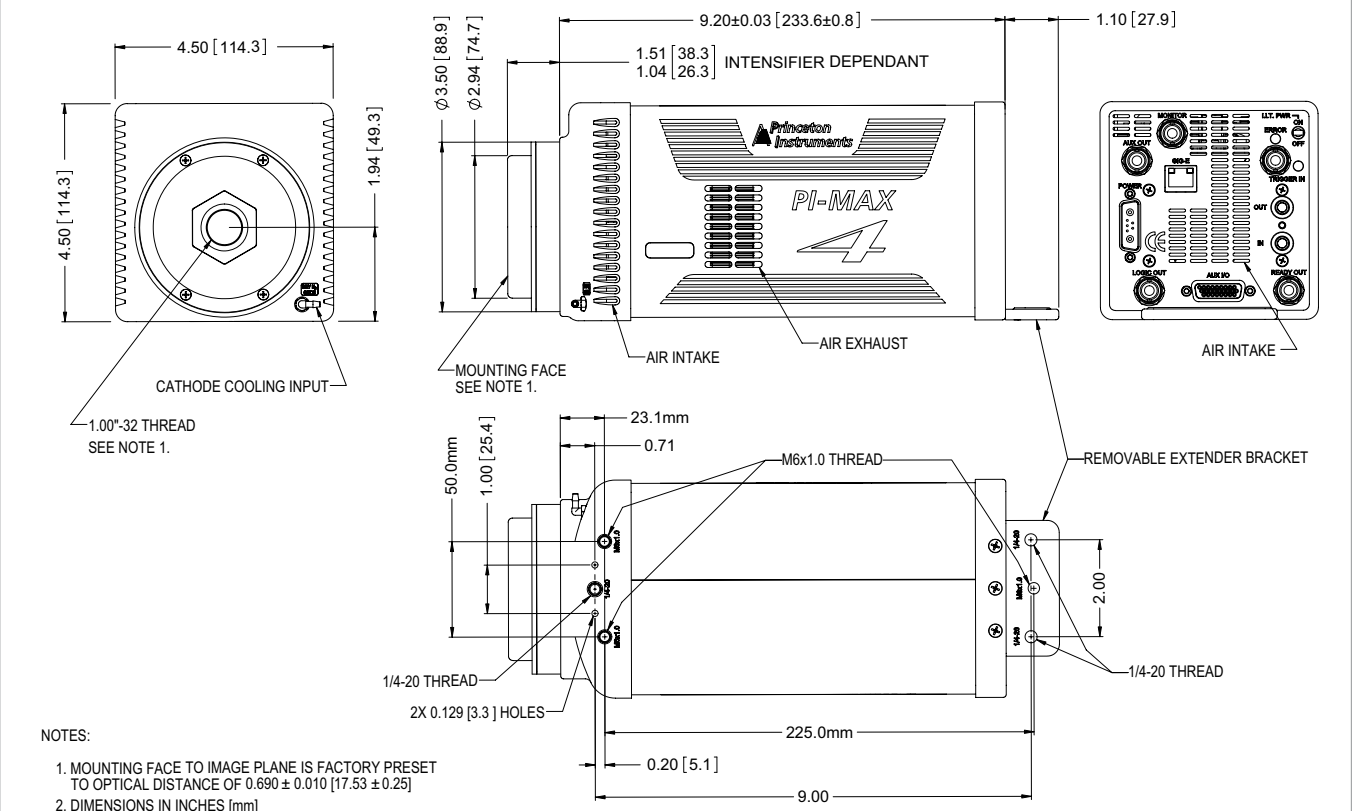

NOTES:

1. MOUNTING FACE TO IMAGE PLANE IS FACTORY PRESET TO OPTICAL DISTANCE OF 0.690 ± 0.010 [17.53 ± 0.25]
2. DIMENSIONS IN INCHES [mm]
3. TOLERANCES: ± 0.01 [±0.25]
4. WEIGHT: CAMERA 6.86 lbs (3.12 kg)
   POWER SUPPLY 4.1 lbs (1.87 kg)

Princeton Instruments

PRELIMINARY

With "F" Mount

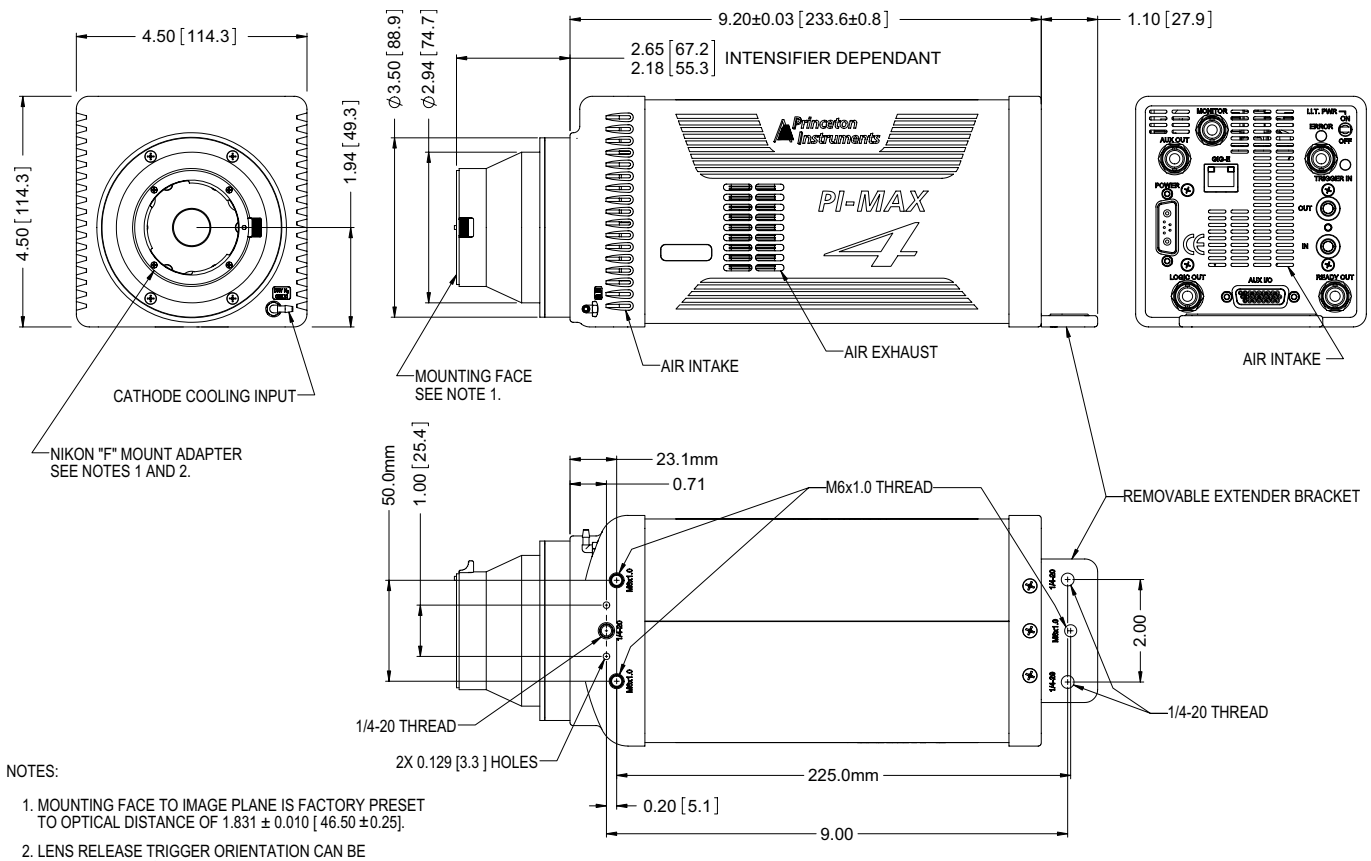

NOTES:

1. MOUNTING FACE TO IMAGE PLANE IS FACTORY PRESET TO OPTICAL DISTANCE OF 1.831 ± 0.010 [46.50 ± 0.25].
2. LENS RELEASE TRIGGER ORIENTATION CAN BE ROTATED IN 180 ° INCREMENTS.
3. DIMENSIONS IN INCHES [mm]
4. TOLERANCES: ± 0.01 [± 0.25]
5. WEIGHT: CAMERA 6.95 lbs (3.16 kg)
   POWER SUPPLY 4.1 lbs (1.87 kg)

Princeton Instruments

PRELIMINARY

With Spectrometer Mount

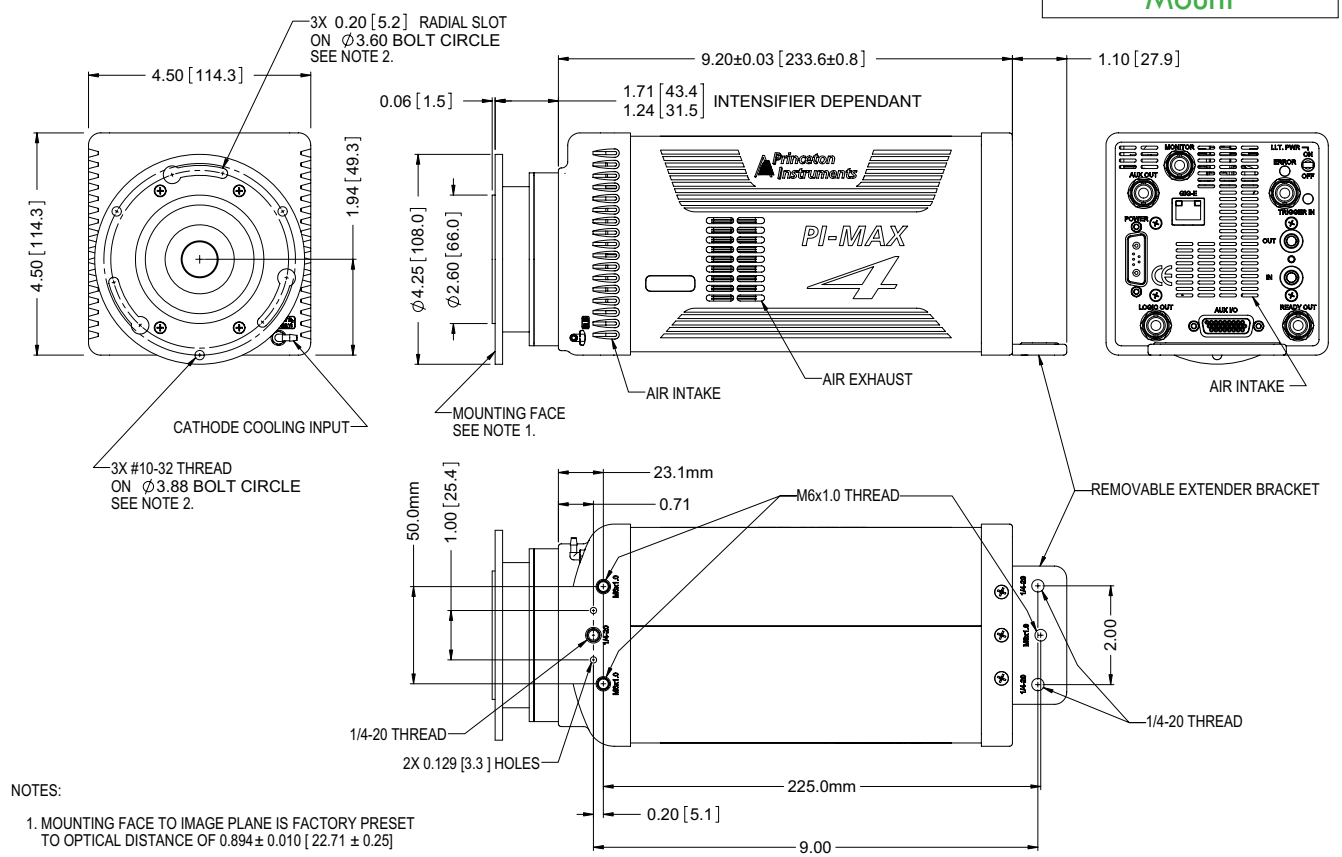

NOTES:

1. MOUNTING FACE TO IMAGE PLANE IS FACTORY PRESET TO OPTICAL DISTANCE OF 0.894 ± 0.010 [22.71 ± 0.25]
2. MOUNTING FLANGE ORIENTATION CAN BE ROTATED IN 180 ° INCREMENTS
3. DIMENSIONS IN INCHES [mm]
4. TOLERANCES: ± 0.01 [± 0.25]
5. WEIGHT: CAMERA 7 lbs (3.2 kg)
   POWER SUPPLY 4.1 lbs (1.87 kg)

PULSAR

THERMAL RIFLESCOPES

APEX XD38A

PL76416

- 384x288 resolution, 50hz refresh rate
- High resolution LCD display
- 950m detection range (human)
- One-shot zeroing with freeze function
- Continuous 4x digital zoom with picture in picture feature
- Manual, automatic, and semi automatic calibration modes
- Memorization of 3 zeroing parameters
- 10 variable electronic reticles
- IRIS technology, increased recognition and detection software
- Rock, forest, and identification viewing modes
- Hot white/ hot black viewing modes
- Defective pixel repair feature
- Video output
- External power supply adaptable

TECHNICAL SPECIFICATIONS

Apex XD38A -PL76416

Type of Microbolometer	Uncooled Microbolometer
Frame Rate, Hz	50
Microbolometer resolution, pix	384x288
Spectral Sensitivity, µm	8-14
Pixel Pitch, µm	25
Video format	PAL/NTSC
Display type	LCD
Display Resolution, pix	640x480
Operation modes	rocks, forest, identification
Magnification, x	1.5-6x
Digital zoom, x	continuous zoom 1x-4x
Lens diameter, mm	32
Lens focus, mm	38
Relative aperture, D/f'	1:1.2
Field of View,º horizontal * vertical	14.4/10.8 - 2x zoom (7.2/5.4) - 4x zoom (3.6/2.7)
Field of View, m@100m, horizontal	25 (2x zoom- 12.5/4x zoom -6.25)
Minimum focusing distance, m	5
Eye Relief, mm	67
Diopter adjustment, dptr.	-4...+3.5
Focusing type of distance	objective
Range of detection, yd/m (object (human=1.7*0.5m)	1050,950
Power Supply	4-6V
Battery type	2xCR123
Battery life (w/ vido out off), hrs	5
External Power Supply	Pulsar EPS3 or EPS5
Windage & Elevation, 1 click (H/V), mm@100m	40/40
Windage & Elevation adjustment range, mm	8000/8000
Number of preloaded reticles	10
Reticle type	variable electronic reticles
Lens Material	germanium, glass
Body Material	glass-nylon composite
Type of mount for attachment of additional accessories	Weaver
Operating temp, ºF/ºC	5 to 122 / -15 to +50
Level of Protection (acc. to IEC 60529)	IP67 100% dustproof and submergible to 1m for 1 hour
Calibration	manual, automatic, semi-automatic
Shockresistance on rifled weapon, J	6000
Mounting brackets on weapon	weaver/picatinny
Remote control	wireless
Dimensions, mm	335x80x75
Weight (w/o batteries, w/o mount) oz/g	21.2/601

INCLUDED ACCESSORIES

- Apex XD38A Thermal Weapon Sight
- Wireless Remote control
- adapter cable
- 2xCR123
- Carrying case
- Cleaning cloth
- User manual
- warranty card

(include_path='.:/usr/lib/php:/usr/local/lib/php') in **/home/fr1688/public_html/tubes/epm221g.phtml** on line **12**

Notice: Undefined variable: DOCUMENT_ROOT in **/home/fr1688/public_html/tubes/epm221g.phtml** on line **210**

Warning: include(/include/bottom.inc) **[function.include]**: failed to open stream: No such file or directory in **/home/fr1688/public_html/tubes/epm221g.phtml** on line **210**

Warning: include() **[function.include]**: Failed opening '/include/bottom.inc' for inclusion (include_path='.:/usr/lib/php:/usr/local/lib/php') in **/home/fr1688/public_html/tubes/epm221g.phtml** on line **210**

Notice: Undefined variable: DOCUMENT_ROOT in **/home/fr1688/public_html/tubes/epm221g.phtml** on line **37**

Warning: include(/include/top.inc) **[function.include]**: failed to open stream: No such file or directory in **/home/fr1688/public_html/tubes/epm221g.phtml** on line **37**

Warning: include() **[function.include]**: Failed opening '/include/top.inc' for inclusion (include_path='.:/usr/lib/php:/usr/local/lib/php') in **/home/fr1688/public_html/tubes/epm221g.phtml** on line **37**

Notice: Undefined variable: DOCUMENT_ROOT in /home/fr1688/public_html/tubes/epm221g.phtml on line 200

Warning: include(/include/menu.inc) [function.include]: failed to open stream: No such file or directory in /home/fr1688/public_html/tubes/epm221g.phtml on line 200

Warning: include() [function.include]: Failed opening '/include/menu.inc' for inclusion (include_path='.:/usr/lib/php:/usr/local/lib/php') in /home/fr1688/public_html/tubes/epm221g.phtml on line 200

/ Production from the Best Russian manufacturers /

EPM221G 2+ generation 18mm tube with glass input and output

These tubes produced by Ekran-FEP Ltd. and applied in popular **night vision goggles PN-14K** of Novosibirsk instrument making plant.

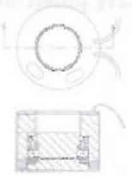

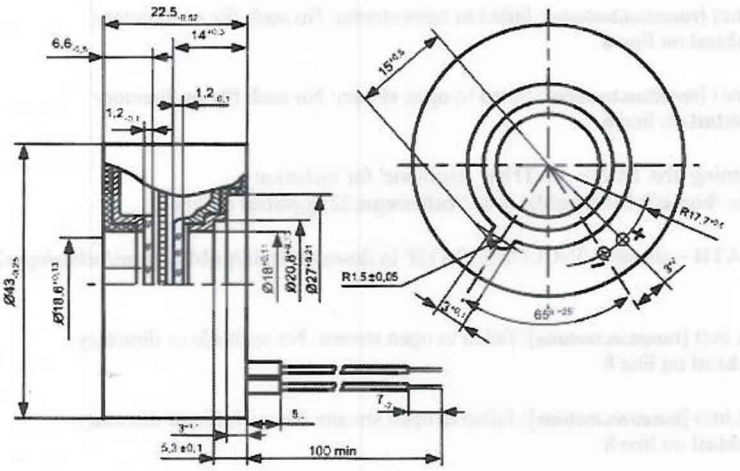

Main parameters:

Technical data	221G-00-11A	221G-00-11B	221G-00-11C
Useful diameter, mm	18		
Photocathode type	S-25		
Resolution, lp/mm	57	51	64
Signal to noise (at 108μlx)	22	20	24
Luminous sensitivity at 2850°K, μA/lm	550	550	600
Radiant sensitivity at λ=850 nm, mA/W	55	50	45
Gain at 2×10^{-5} cd/m^2/lx, min	20000/n	20000/n	20000/n
Equivalent Background Input (EBI), μlx, max	$1,5\times10^{-3}$		
Input current, mA	25		
Input voltage, V	2,0÷3,6		
Weight, g	55		
MTTF (Mean time to failure), hours	5000		

Field of view cleanness:

Zone number	Circular zone dimensions, mm	Maximum diameter of spots			Admitted total area of spots, mm^2
		neglected	admitted		
			diameter, mm	quantity	
I	9.0	0.06	0.15	1	0.12
II	9.0-14.4	0.08	0.25	2	0.27
III	14.4-18.0	0.10	0.35	2	0.45

Main modifications of the image intensifiers: **glass output, invertor, non-invertor.**

IMAGE INTENSIFIER TUBE
EPM102G-05-22

KURSH.6349-010-99 TU

Technical characteristics	**F**	**S**	**A**	**B**	**Unit of measure**
Photocathode useful diameter	17,5				mm
Photocathode type	GaAs				
Material of output window	Glass				
Phosphor	P43 (also available in P22 and P45 *)				
Limiting resolution, min	68	64	60	57	lp/mm
Photocathode sensitivity:					
Luminous, min	2000	1800	1800	1600	µA/lm
Radiant (850 nm), min	190	180	170	160	mA/W
Gain, min	35 000 – 80 000 **				lm/lm
Max. output brightness	2 – 14 **				cd/m2
E.B.I., max	0,25				µlx
Signal to noise ratio at 108 µlx, min	27	24	23	22	
Input current, max	20				mA
Input voltage	2,0 ÷ 3,6				V
Weight, max	68				g
MTTF	10 000				h
Additional options (when requested by the Customer)	External gain control				
	Shockproof modification				
	Auto-Gating Power Supply Unit				

Field of view cleanness

Dark spots size, mm	Circle Ø 5,6 mm, zone 1	Ring Ø 5,6-14,7 mm, zone 2	Ring Ø 14,7-17,5 mm, zone 3
More than 0,200	0	0	0
0,150 - 0,200	0	1	1
0,075 - 0,150	0	2	2

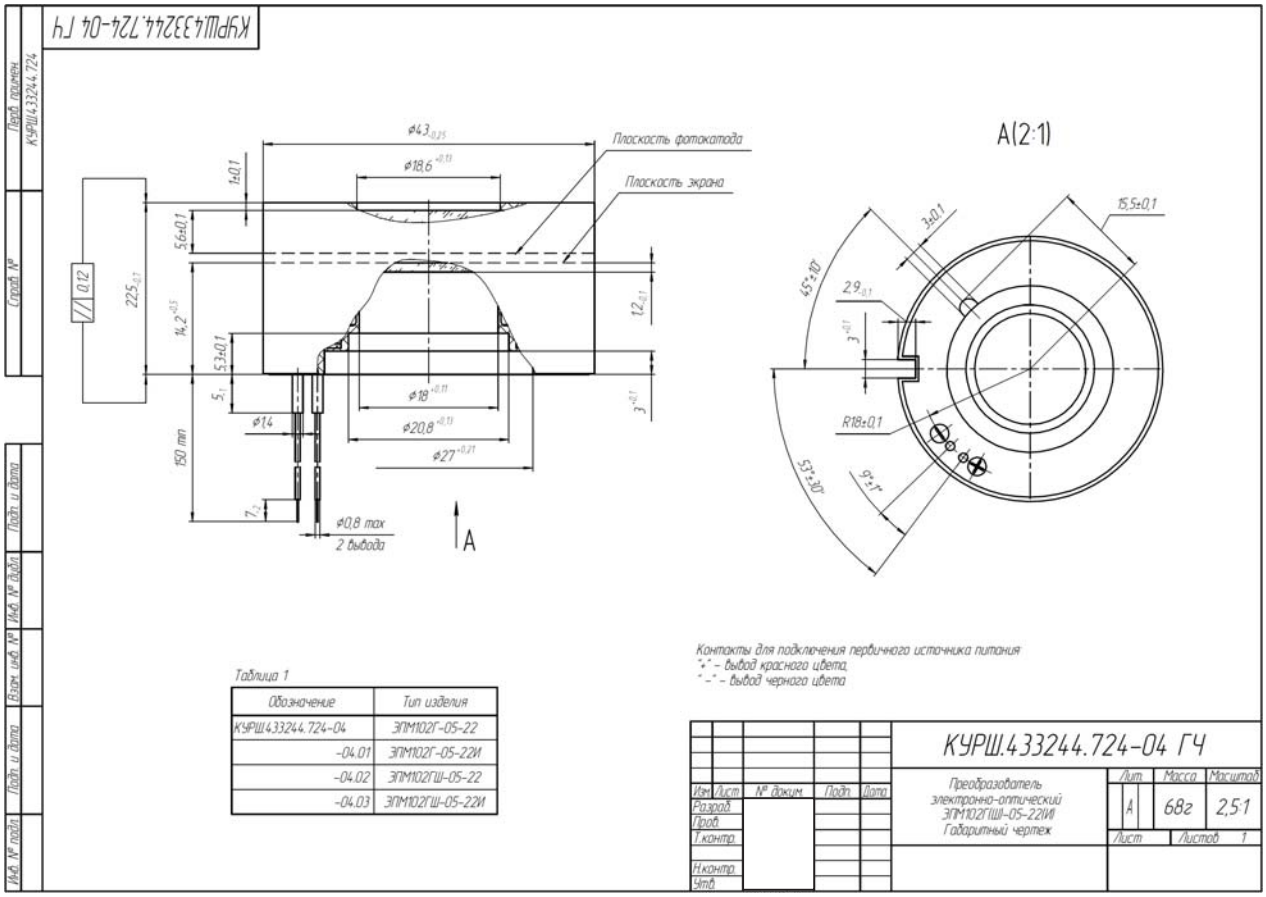

* P45 phosphor emits white light

** Particular parameter value is specified in accordance with Customer's requirements

www.katodnv.com
sales@katodnv.com
info@katodnv.com

3, Padunskaya Str., Novosibirsk, 630047, Russia, 630047
Phone: +7 (383) 227-22-00
Fax: +7 (383) 227-21-50

swir

SASI-600 v2

Airborne Hyperspectral Solutions.

SWIR Imager
100 Spectral Channels
40 degree FOV, 600 Spatial Pixels
0.95 - 2.45 micron Spectral Range
Diffraction Limited Optics

itres

Document ID: U10034-02

ITRES Research Limited Calgary, Alberta, Canada T:403.250.9944 F: 403.250.9916
In USA, please phone: 228.467.2345 or toll-free (North America) 877.250.9944

www.itres.com
info@itres.com

SASI-600 v2

Sensor Type

SWIR Pushbroom Sensor (Shortwave IR Airborne Spectrographic Imager)

Performance

Spectral Range (Continuous Coverage)	**950-2450 nm**
# Spectral Channels	*100*
# Spatial Pixels	*600*
Total Field of View	*40 degrees*
IFOV	*1.2 mRad*
f/#	*f/2*
Spectral Width Sampling/Row	*15 nm average*
Spectral Resolution (FWHM)	*15 nm average*
Pixel Size	*30x30 microns*
Dynamic Range	*14-bits (16384:1)*
Sustained Data Rate - Mega-pixels/Second	*3.6 Mpix/sec*
Spectral Smile/Keystone Distortion	*±0.35 pixels*
Peak Signal to Noise Ratio (SNR)	*SNR models for various radiance conditions are available from ITRES*

Dimensions, Weights, and Power

Item	Dimensions (cm)	Weight (kg)
SHU	W 44.0 H 86.8 D 20.0	32
ICU (Single)	W 48.3 H 17.8 D 52.3	16
15" Display	W 41.0 H 30.9 D 6.52	8
Power (SHU + ICU)	24-32VDC 25.5A (Typical)	

Environmental Constraints

Operating Temperature	Ambient 0 to +35°C (+32 to +104°F) RH 20-80% non-condensing
Maximum Altitude	3,048 m (10,000 ft) ASL (unpressurized, non-condensing environment
Storage Temperature	Optimum -20 to +60°C (-4 to +120°F) RH 10-90% non-condensing

Operation

Display	15" sunlight readable, 1024x768 resolution.
Operator Control	Via keyboard, Windows™ OS
Real-Time Display	Scene image, diagnostics, signal level display
Remote Diagnostics	Ethernet-ready remote diagnostic capability on ICU
Data Storage	Swappable mass storage

Data Processing System

- Processing software Linux and Windows-based
- Playback software (Quicklook)
- Generates 16-bit BIP format data compatible with ENVI (BIL, BSQ formats possible)
- ASCII format ancillary QC data output - clocking, attitude, logging, GPS, and sensor health monitoring information
- Outputs diagnostic information
- Selectable band output

Geocorrection System

- GPS/IMU processing
- Data synchronization (GPS, attitude, and image streams)
- After bundle adjustment no need for GCPs
- Stabilized mount option

Geocorrection/Orthocorrection Software

- Best nadir pixel selection function during mosaicking
- Accepts Lidar, Ifsar, and USGS DEM inputs
- Nearest neighbor algorithm used - maintains radiometric fidelity
- Separately stores ancillary data (e.g. pointing vector, DEM)

Spatial Resolution & Flight Altitude

- Across-track spatial resolution depends on flight altitude
  For example, if 1 m pixels are desired, then flight altitude = 824 m AGL
- Along-track pixel dimension depends on frame rate and aircraft speed
  Frame rate fixed for SASI; for 1 m pixels, required flight speed is 120 knots.

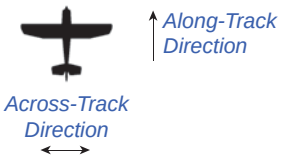

www.itres.com

All ITRES sensors are calibrated to traceable standards.
Specifications subject to change without notice. ©2008 ITRES Research Limited

HARRIER
LONG WAVE INFRARED DETECTOR

Selex ES, designs, develops and manufactures Infrared (IR) detectors at its dedicated facility in Southampton, UK. With a reputation for providing customers with the best in high performance and cost-effective technology for IR camera systems, Selex ES offers a unique level of expertise.

The Harrier Long Wave Infrared (LWIR) detector is a 640 x 512 Mercury Cadmium Telluride (MCT) Integrated Detector Cooler Assembly (IDCA). The Harrier LWIR detector is designed for very high performance imaging in the 8 - 10μm waveband.

Using the Selex ES MCT process, the Harrier LWIR detector provides the highest environmental integrity along with the superior performance of focal plane detectors.

MAIN FEATURES

- Snapshot or interlaced operation
- Simple to use
- Long Wave (LW) 8 - 10μm
- High electro-optic performance with low crosstalk, automatic anti-blooming at the pixel level and excellent sensitivity
- Windowing gives enhanced frame rates over selected areas of the array
- Highest LW technology performance available in the world
- Longest LW technology DRI ranges
- Reduced stare time, less motion blur than QWIP detectors
- High performance in low scene temperature Key benefits
- Low cost
- High resolution
- High frame rate
- High sensitivity

Experts in Cryocooling

SPLIT STIRLING COOLER – SRL301
(0,5W@80K)

The cooler is intended for use in IR applications but can be used also in other applications.

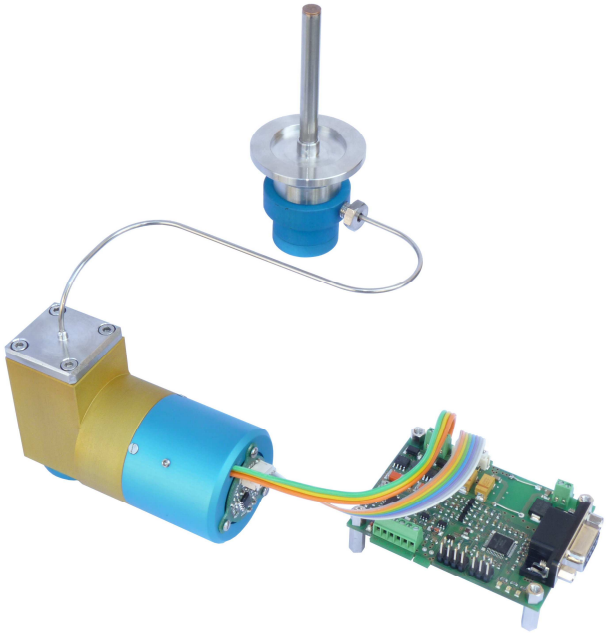

Le-tehnika's New split Stirling rotary cryocooler model SRL301 was developed on a basis of good results of the previous family TSO with an aim of a longer life time and a smaller power consumption.
This model is a member of a new more reliable family of rotary driven Stirling coolers with main improvements on motor – compression unit and also on expander.
The concept of the direct integration of a detector on a cooler cold finger (IDCA) was implemented by the Expander design.
The operation of the Stirling compressor driven via DC brushless motor is smooth and silent, with low vibrations and an acoustic noise. Motor windings are outside of the working gas to prevent its contamination and prolong the lifetime and reliability of the cooler.
Small electronic driver with an onboard temperature controller is also fully programmable via RS232 port for a custom mission profile. Over-current protection, standby mode and remote shutdown are available as an option. The electronic board is also available in a version integrated into the end of the electromotor.

PERFORMANCE SPECIFICATIONS:
(for an ambient temperature of 23 °C)

Input Voltage: …….……	21-28 VDC
Typ. Steady State Input Power: ……..	(400mW @80K): 20W
Cooldown time to 80K (200J): ……..……	< 4.5 min
Maximum Input Power Required: ……..…	30 W (during cooldown)
Operating Ambient Temperature Range: ……	- 40 °C to + 71 °C
Weight: …….	< 650gr
MTBF: ……..……	> 5000h (Expected)

Meets Environmental Conditions per MIL-STD-810D

Optional cold finger designs with alternative connection tube are possible

LE-TEHNIKA d.o.o.
Šuceva 27 , 4000 KRANJ - Slovenija
Tel.: +386 4 20 20 280, Fax.: +386 4 204 2122
cryogenics@le-tehnika.si
http://www.le-tehnika.com/cryogenics/program.htm

Dimensions:

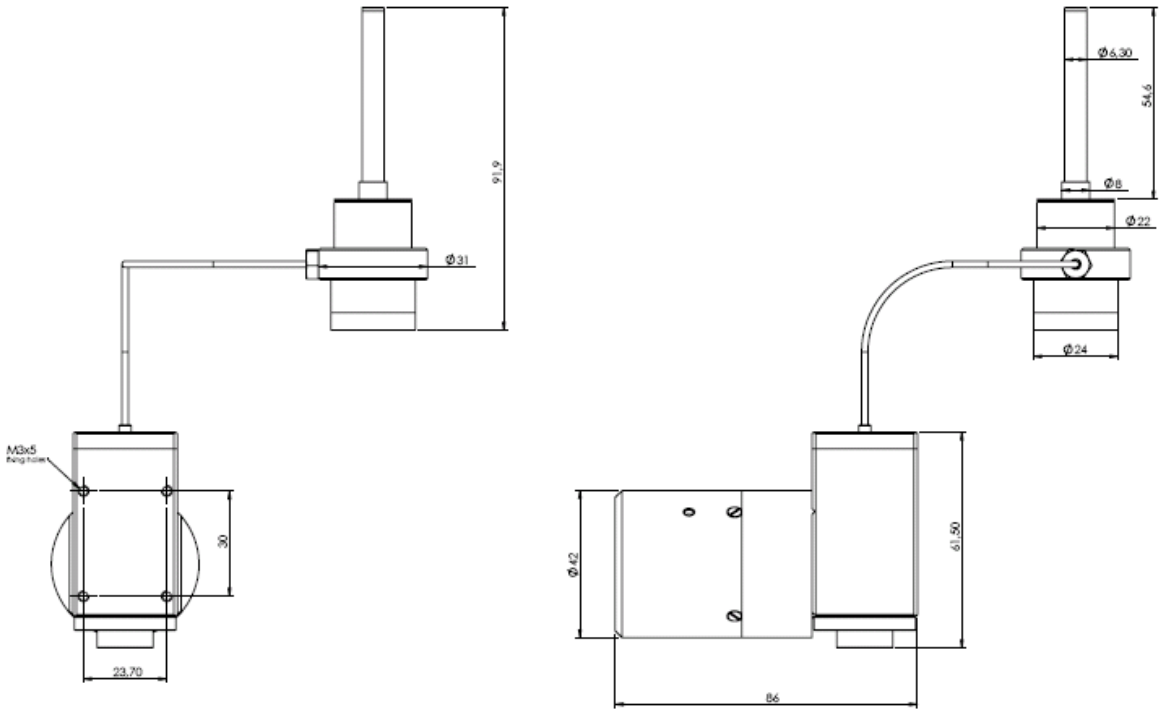

Note: Specifications are subject to change without notice

LE-TEHNIKA d.o.o.
Šuceva 27 , 4000 KRANJ - Slovenija
Tel.: +386 4 20 20 280, Fax.: +386 4 204 2122
cryogenics@le-tehnika.si
http://www.le-tehnika.com/cryogenics/program.htm

MIRICLE
Powered by Thermoteknix

TiCAM® 750

Handheld Thermal Imaging

TiCAM 750 Thermal Imaging Binoculars

TiCAM® 750 from Thermoteknix Systems Ltd is a Mil Spec handheld thermal imager for special forces reconnaissance, border security, target acquisition, counter drug operations and general situational awareness.

Two models are available, both operating at 50Hz: TiCAM 750**MR** (Medium Range) is based on a Thermoteknix MicroCAM 384x288 25µ pitch detector. TiCAM 750**LR** (Long Range) features a higher resolution 640x480 detector with 17µ pitch.

TiCAM 750's clamshell design with rubber over-moulding protects the camera in the harshest of environments and allows operation with or without gloves. Functions include electronic focus & digital zoom, edge detection, external video output and up to 8 hours operation in normal use from 4 x AA batteries.

A x2 bayonet quick-fitting 150mm *f*/1.3 telephoto lens is also available and is compatible with both models to further extend viewing range.

Optional features of TiCAM 750 include Digital Magnetic Compass with bearing & elevation information, GPS with user-selectable display in geographic, UTM or MGRS military co-ordinates, laser target marker and in-camera recording for 4 hours live video or still frame.

Choice of 384x288 or 640x480 detectors

Quick Change x2 Telephoto Lens (150mm f/1.3)

MIRICLE
Powered by Thermoteknix

TiCAM 750

State-of-the-art TiCAM 750	
Detector (Uncooled)	**Amorphous Silicon Microbolometer:** TiCAM 750MR - 384 x 288 25µ pitch TiCAM 750LR - 640 x 480 17µ pitch
Instant On	Power on Time < 3 seconds
Battery Life	Up to 8 Hours Operation
Export Control	Subject to UK/EU Regulation Not subject to US ITAR Regulation
Display Modes	Standby/Covert mode
Tripod Mount	1/4" - 20

Physical Characteristics	
Size (excluding eye shade)	L:280mm, H:110mm, W:170mm
Weight	1,850g (Standard Model)
Colour	Black
Anti-shock Protection	Rubber Overmoulding Armour
Lens coatings	High efficiency, Diamond-Like Anti-scratch
Lens Cap	Hinged Integral Lens Cap
Eye Shade	Compatible with goggles

Electrical Characteristics	
Battery Size	4 x AA Lithium Primary (as standard) Optional 4 x AA NiMH rechargeable (variable duration)
TV Video	Monochrome PAL (CCIR) standard Monochrome NTSC (EIA 'RS-170') on request
Video Output	Yes, Composite 1V pk-pk
External Interface Connector	RS232 / Video Out / Power In

Environmental Characteristics	
Low Temperature Operation	MIL-STD-810F: Method 502.4: Procedure II
High Temperature Operation	MIL-STD-810F: Method 501.4: Procedure II
Immersion	MIL-STD-810F: Method 512.4: Procedure I
Random Vibration	MIL-STD-810F: Method 514.5: Procedure I
Transit Drop	MIL-STD-810F: Method 516.5: Procedure IV

Controls	
Power	On/Off
Focus Mechanism	Electronic
Polarity	White Hot/Black Hot
Electronic Zoom	x1, x2, x4
Gain/Contrast	Auto/Manual Range
Display Brightness	High/Low Covert (User Defined)
Image Enhancement (Edge Detect)	On/Off
Display Graphics	Battery Status/Gain Mode/ Polarity/Zoom/Reticule

Display Characteristics	
Type	Dual OLED 800x600 pixels
Eyepiece Adjustments	Dioptre Adjustment -4 to +2 Dioptres

System Characteristics	
Lens Size	75mm *f*/1.0
Operation Distance	5m to Infinity
Operating Wavelength	8µm to 14µm
NETD	<60 mK
MTBF	>20,000 Hours (Calculated)

Optional Features
Built-In GPS L1 Commercial Frequency - Location Accuracy ± 2.5m geographic or military grid co-ordinates UTM or MGRS (user selectable)
Built-In Digital Magnetic Compass 3 Axis Sensors Heading - Magnetic North - Bearing & Elevation On Screen Display - On/Off
Built-In Record Video Facility Up to 4 hours intermittent/continuous recording in H264 (MPEG4-AVC) format saved to 8GB internal memory
Laser Target Marker - 650nm (visible) or 850nm (night vision detectable)
Remote Control: Virtual TiCAM PC Software
Range Extender Optics - x2 Telephoto (150mm *f*/1.3)

TiCAM Model	Lens	iFOV	HFOV	VFOV	Diagonal FOV	Hyper focal Distance	Atmospheric Conditions	Man Detection	Man Recognition	Man Identification	Tank Detection	Tank Recognition	Tank Identification
TiCAM 750MR (Medium Range)	75mm *f*/1.0	0.333 mRAD	7.3°	5.5°	9.1°	113m	Johnson Criteria	2000m	500m	250m	4600m	1150m	575m
							Good Conditions[1]	1500m	500m	250m	3000m	1200m	600m
							Poor Conditions[1]	1200m	500m	250m	2000m	1000m	600m
TiCAM 750LR (Long Range)	75mm *f*/1.0	0.23 mRAD	8.3°	6.2°	10.4°	165m	Johnson Criteria	2750m	735m	350m	6750m	1500m	800m
							Good Conditions[1]	2050m	735m	350m	4250m	1450m	750m
							Poor Conditions[1]	1450m	735m	350m	2000m	1100m	700m

[1]Good and Poor atmospheric condition figures are based on NATO Standard Agreements (STANAG) 4347 and 4349.

Thermoteknix MIRICLE & MicroCAM based products are not subject to US ITAR control. However they may require a UK export licence as provided by BIS regulations depending on the end-user country and specification.

UK Head Office: Teknix House, 2 Pembroke Avenue, Waterbeach, Cambridge, CB25 9QR, UK
Tel: +44 (0)1223 204000 Fax: +44 (0)1223 204010
Web: www.thermoteknix.com Email: sales@thermoteknix.com

TWS-3100

always a step ahead...since 1992

THERMAL IMAGING WEAPON SIGHTS

FEATURING

Unparalleled Performance Uncooled FPA
High Refresh Rate: up to 60 Hz
Shutterless & Soundless XTi™ Technology
Quality, Low F# Germanium Objective lens
Low Power Consumption
Digital Zoom controls 2x-4x
Black Hot/White Hot Polarity
Two "quick swap" battery packs
Manual/Automatic Sensitivity Control
Manual Brightness Control
High Resolution 800x600 OLED display
24 hours operation
Video Out
16 Selectable Reticles Patterns
Auto-OFF Feature
Recoil Proof
SRF-Stadiametric Rangefinder (Optional)
HMD-800 Head Mounted Display (Optional)
RAM-Recoil Rail (Optional)
Scopes have precisely machined aircraft aluminum bodies

Device supplied with 1913 Picatinny weapon mount, video-out cable, 2 sets of "quick swap" battery packs, 4 pcs. Of AA Lithium batteries, long eye relief rubber eyecup, front lens cover, Operator's Manual, 7 years of GSCI limited manufacturer's warranty, soft carrying pouch.

TECHNICAL DATA

MODEL	*TWS-3100CG*	*TWS-3100CGxI*	*TWS-3100CGxI-17*
Spectral Response	*8-12 um*	*8-12 um*	*8-12 um*
F.P.A. Format	*384 x 288, 25µm*	*384 x 288, 25µm*	*640x480, 17µm*
Thermal Sensitivity	*70 mK*	*50 mK*	*60 mK*
Refresh Rate	*50-60 Hz*	*50-60 Hz*	*25-30 Hz*
Lens Size	*100 mm, F:1.4*	*100 mm, F:1.1*	*100 mm, F:1.1*
Magnification Optical	*4X*	*4X*	*4X*
FOV, deg.	*8°×6°*	*8°×6°*	*8°×6°*
Magn. Total w/Dig. Zoom	*8X-16X*	*8X-16X*	*8X-16X*
Diopters Adjustments	*+2/-6*	*+2/-6*	*+2/-6*
OLED Micro Display	*800x600*	*800x600*	*800x600*
Weight	*1307 grams*	*1492 grams*	*1492 grams*
Dimensions, mm	*280x105x105*	*280x105x105*	*280x105x105*

Powered By 4 pcs. AA batt.	**Lithium**	**Ni-MH Rechargeable**	**Alkaline**
Continuous Operation Time FPA 640x480 ("up to" hours)	12	7	5
Continuous Operation Time FPA 384x288 ("up to" hours)	14	8	6

Made in Canada by:
GENERAL STARLIGHT CO. INC.
P.O. Box 32154, Richmond Hill, ON
L4C9S3, Canada, Tel. (905)850 0990
Web: www.gsci1.com
E-mail: gsci@gsci1.com

DISCLAIMER. Technical description, view, weight, dimensions, some optical-electronic-mechanical features of the product shown herein and/or some of it's parts/components may not precisely represent the actual view and values of the working model and are subject to change without prior notice by the sole discretion of the Manufacturer. *Contact us for further clarifications. Information contained in this message is proprietary of General Starlight Co., protected from disclosure, highly confident, and may be privileged. This information is intended to be conveyed only to designated recipients of the message. If the reader of this message is not the intended recipient, you are hereby notified that any dissemination, unauthorized use, distribution or copying of this material is strictly prohibited and may be unlawful. Copyright © 1992-2015 General Starlight Co., Inc. Canada. All rights reserved.

U & U Engineering Inc.

SWIR-640DE3

The SWIR-640DE3 camera is short wave infrared camera made of InGaAs FPA. The spectrum response is from 900 to 1700 nm(NIR). It provides on-board Automatic Gain Control (AGC), Bad Pixel Replacement (BPR) and Non Uniformity Correction (NUC).

Camera Specification

Detector	InGaAs
Array Format	640(H)x512(V)pixels
Pixel Size	25x25 um
Spectral Response	900-1700nm(NIR)
Digital Data	12 bit
Frame Rate	30Hz
Operability	>99%
Quantum Efficiency	>70%
Power Input	DC 12V
Cooling	TE Cooler
Vedio Connector	BNC
PC Interface	IEEE 1394
Lens Mount	C-Mount adapter in F-Mount

Physical Specification

Dimensions	128mm × 87.5mm × 89.5mm

U & U Engineering Inc.
No, 15, Gao Yang South Road Lung-Tan, Taoyuan Taiwan, R.O.C. TEL/ +886 3 4116025
FAX/ +886 3 4116020 E-mail/ sales@uuei.com.tw www.uuei.com.tw

GYRO STABILIZED GIMBAL

CM202

CUSTOMISABLE MULTI-SENSOR GIMBAL

Various EO Sensors allow a fully customised solution for your application

2 AXIS GYRO STABILIZED

Faster and more accurate reactions to external disturbances

- **Simple hook up – plug and play**
- MWIR Sensor
- Proven reliability
- On board video stabilization
- MISB 0601 Standards
- Raw outputs available
- Experienced support team
- No calibration required
- Affordable

OBJECT TRACKING

You designate a region of interest/object on the video image and the gimbal will keep the target centre of frame, throughout platform and object movements.

REAL-TIME VIDEO STABILIZATION

Electronically removes vibrations caused by the platform for a steady image. Ideal for a wide range of UAV/fixed wing applications in any conditions.

MOTION DETECTION

Allowing you to follow multiple cars/objects at once by automatically tagging up to 5 moving objects within its FOV.

GEOLOCK

Ensures that the gimbal automatically steers towards your chosen geographic coordinates, even as the platform manoeuvres.

UAV VISION

UAV Vision Pty Ltd
Website: **www.uavvision.com** • Email: **sales@uavvision.com**
Office: **+61 (0) 265 811 994** • Mobile: **+61 (0) 402 437 154**

GYRO STABILIZED GIMBAL

CM202

CUSTOMIZABLE MULTI-SENSOR GIMBAL

HD EO, IR and Laser sensors allow a fully customized solution for your application

MWIR SENSOR WITH CONTINUOUS OPTICAL ZOOM LENS

Paired with a Long Range Optical Zoom Lens to get closer to the target

- **Simple hook up – plug and play**
- Low SWaP-C System
- MWIR Sensor with Optical Zoom
- True 80µrad Direct Drive Stabilization
- HD Global Shutter CCD Daylight Sensor
- ITAR Free Configurations Available
- Raw Outputs Available

ITAR FREE
Sub 3kg/6.6lbs

0mm 190mm

OBJECT TRACKING

You designate a region of interest/object on the video image and the gimbal will keep the target centre of frame, throughout platform and object movements.

GEO-LOCK

Ensures that the gimbal automatically steers towards your chosen geographic coordinates as the platform manoeuvres without operator input

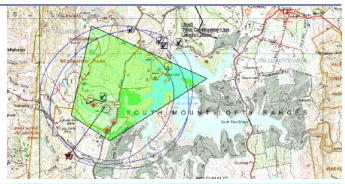

REAL-TIME VIDEO STABILIZATION

Electronically removes vibrations caused by the platform for a steady image. Ideal for a wide range of UAV/fixed wing applications in any conditions.

MOTION DETECTION

Allowing you to follow multiple cars/objects at once by automatically tagging up to 5 moving objects within its FOV.

UAV VISION

UAV Vision Pty Ltd
Website: **www.uavvision.com** • Email: **sales@uavvision.com**
Office: **+61 (0) 265 811 994** • Mobile: **+61 (0) 402 437 154**

CM202

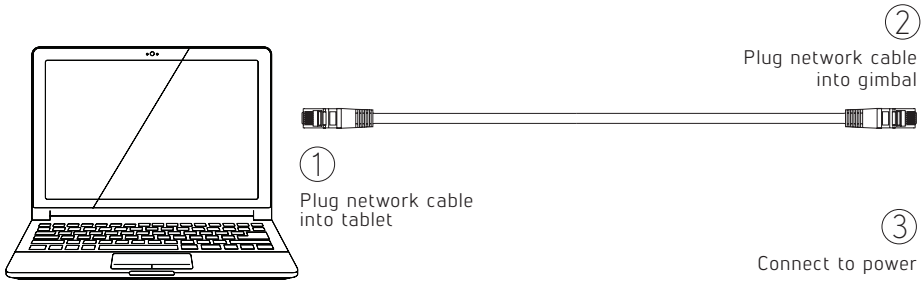

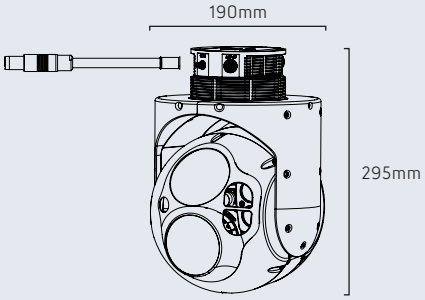

SIMPLY PLUG AND PLAY

You can easily hook up the CM202 by using a power and network cable, and use it straight away

MULTIPLE SENSOR OPTIONS
Provides you with options to choose from a range of EO and IR sensors to suit your mission

HD VIDEO
Allows high definition daylight video to be streamed live to the operator

DIRECT DRIVE
Allows for faster response to disturbances to keep target in center of frame

ON BOARD STILL SHOTS
Allows high definition stills to be taken without interrupting video transmission

KLV METADATA OVERLAY
Gimbal State – Corners of Frame – Centre of Frame – World Coordinates
UTC Time – Slant Range to Target – Target Coordinates

FIELD UPGRADABLE
Allows you to add Object Tracking, KLV Metadata and GEO-Lock options to remain flexible with your needs

NTSC AND PAL
More viewing options providing you with the flexibility to switch modulations for world wide compatibility

DEDICATED SUPPORT STAFF
One on one responses to all your sales and technical queries

Fixed Wing

Aerostats

Rotary Wing

SYSTEM SPECIFICATIONS

Gimbal Capabilities

POSITION ACCURACY	0.0046° (80 µrad)
ELEVATION	+ 130° / - 30°
AZIMUTH	360° continuous
SLEW RATE	150°/sec (2.6 rad/s)
POWER	55W
VOLTAGE	9 - 36V
ELECTRONICS	HighSpeed32bit
COMMUNICATION LINK	Ethernet/RS232

Physical Dimensions

WEIGHT	3kg/6.6lbs
DIMENSIONS	190mmDx295mmH (7.4inch D x 11.6inch H)
TEMPERATURE	-20°C – +55°C

Video Specifications

ANALOGUE OUTPUT	Composite
DIGITAL OUTPUT	h.264 up to 10 Mbps
SNAPSHOTS	HD (Stored On Board)

PAYLOAD SPECIFICATIONS

Sensor #1a	EO Daylight
MODEL	DISC120R
EFFECTIVE PICTURE ELEMENTS	1280x720
SD FIELD OF VIEW	44° wide – 1.5° tele
HD FIELD OF VIEW	62.9° wide – 2.2° tele
ZOOM RANGE	Continuous Optical

Sensor #1b	EO Daylight with Extender
MODEL	DISC120R
EFFECTIVE PICTURE ELEMENTS	1280x720
SD FIELD OF VIEW	21.4° wide – 0.75° tele
HD FIELD OF VIEW	31.5° wide – 1.1° tele
ZOOM RANGE	Continuous Optical

Sensor #2	Infrared MWIR
MODEL	Multiple Options
EFFECTIVE PICTURE ELEMENTS	640 x 512 pixels
FIELD OF VIEW	21.8° wide – 1.7° tele
ZOOM RANGE	ContinuousOptical

Sensor #3a	Infrared LWIR
MODEL	Tau 2 640
EFFECTIVE PICTURE ELEMENTS	640 x 512 pixels
FIELD OF VIEW	Multiple Lenses Available
ZOOM RANGE	ContinuousOptical

Sensor #3a	Infrared SWIR
MODEL	Tau SWIR
EFFECTIVE PICTURE ELEMENTS	640 x 512 pixels
FIELD OF VIEW	Multiple Lenses Available
ZOOM RANGE	ContinuousOptical

Sensor #4a	LRF
ZOOM RANGE	Upto10km(6.2miles)

Sensor #4b	Designator
Sensor #4c	Illuminator

Sensor #5	Additional Payload Bay

Customizable to suit requirements

UAV VISION

UAV Vision Pty Ltd
Website: **www.uavvision.com** • Email: **sales@uavvision.com**
Office: **+61 (0) 265 811 994** • Mobile: **+61 (0) 402 437 154**

17 µm

Uncooled Infrared LW Detector

1024 x 768

UL 05 25 1

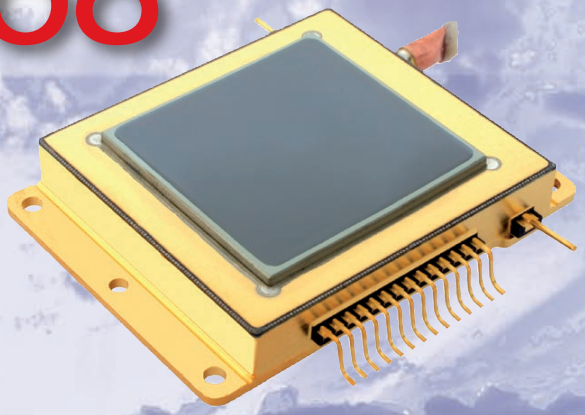

Ready for...

High Definition

Security

Military

Medical

ULIS

Infrared for you

Silicon Infrared Imaging Sensors

ZI Les Iles Cordées - BP 27 - 38113 Veurey-Voroize - FRANCE
Phone: +33 4 76 53 74 70 - Fax: +33 4 76 53 74 80
www.ulis-ir.com / ulis@ulis-ir.com

BUREAU VERITAS
ISO 9001
ISO 14001
OHSAS 18001

Printed in France (C)

FOCAL PLANE ARRAY

Material: resistive amorphous silicon

Array format: 1024 x 768 (XGA)
Pixel pitch 17 µm

Area fill factor > 65%

Spectral response: 8 – 14 µm

PERFORMANCE

Thermal time constant ≤ 10 ms

Extended detector operating temperature range:
- 40°C to + 85°C

Typical array operability > 99.9%

Typical signal response: 10 mV/K

Standard deviation ≤ 1.5%

FEATURES

Low power consumption < 170 mW

User friendly electrical interface

Two analog video outputs

Weight ≤ 30g

Overall dimension (mm)
41.2 x 30 x 6.6 pin out excluded

Readout configuration driven by serial link

Notes:

INFRARED FOR YOU

Groupe SOFRADIR

Presentation to SITAC - Sensors & Instrumentation Technical Advisory Committee Meeting

Professor Judy Pipher
Department of Physics and Astronomy
University of Rochester

OCTOBER 28, 2014

Export Controls and University Research

- **Many times export controls are applied to equipment "purchased" by university researchers for basic fundamental research**
- **Sometimes this reflects excess caution by Industry**
- **Sometimes this reflects lack of understanding by government agencies such as Dept. of Commerce, or Dept. of State**

The net result is that university fundamental research is adversely affected, as I shall show through several examples.

Rochester Faculty and Staff Consulted

- **Duncan Moore, Optics (part of Engineering school)**
- **Jim Zavislan, Optics**
- **Jim Fienup, Optics**
- **Jannick Rolland, Optics**
- **John Schoen, Laboratory for Laser Energetics (LLE)**
- **Jonathan Ellis, Mechanical Engineering and Optics**
- **John Tarduno, Earth and Environmental Sciences (EES)**
- **Bill Forrest, Physics and Astronomy**
- **Dan Watson, Physics and Astronomy**
- **Gunta Liders, Assoc. VP, Office of Research and Project Administration (ORPA)**

Thermal Infrared Detector Arrays

- **My specific interest is development of thermal infrared arrays with small well depths and dynamic ranges suitable for low-background IR space astronomy, but NOT military use, NOT earth-looking devices thus NOT surveillance**
- **They are designed for experiments exploiting passive cooling in space for astronomy**
- **THESE ARRAYS ARE NOT DUAL-USE and are being developed by us in collaboration with aerospace companies under NASA contracts**
- **Typically ITAR is introduced by industry on their documents and contract language**

Current Industrial Partner Teledyne

- **Teledyne is producing for our group under our specifications, 1024 x 1024 HgCdTe (MCT) arrays, cutoff wavelength 10 μm under a NASA grant, for the NEOCam space mission**
- **We insist on the astronomy H1RG readout, and techniques to increase the diode capacitance (well depth) according to Pipher/Forrest group prescription**
- **NEOCam requires noise < 30 electrons, dark current < 200 electrons/s, well depth > 45,000 electrons for the NEOCam experiment, at a focal plane temperature of 35-40K for the 10 μm arrays**
- **Contrast this with military requirements of noise ~ 1000 electrons, dark current of 1,000,000 electrons/s and well depths of 10 million electrons, operating at as high a temperature as feasible**

New NASA Grant

- **Recently obtained a new NASA grant to extend cutoff wavelength to 13 then 15 μm at a focal plane temperature of 26K: very important for astronomical space missions**
- **Took 8 months of negotiation to obtain suitable contract language acceptable to the university**

"University of Rochester shall share with Teledyne any test data generated under this contract. Also, due to ITAR restrictions and proprietary information concerns, Teledyne shall review any article by the University of Rochester resulting from this contract before publication.“

Provisions, Impact on Research

- **Our office of research and project administration (ORPA) accepted this under the university basic research exemption, BUT insist that we maintain**
  - **Special keys to labs and offices (janitors have no access when we are not present)**
  - **No foreign grad students can work on the devices**
  - **No unaccompanied persons and no foreign nationals in the lab**
  - **Protected web sites including email**
  - **The publication mandate passed muster ONLY because we collaborate with Teledyne Physicists, and they are co-authors who must approve the paper anyway**
- **ANNOYING, BUT DOABLE**

Published 10 μm results, with Teledyne Co-authors

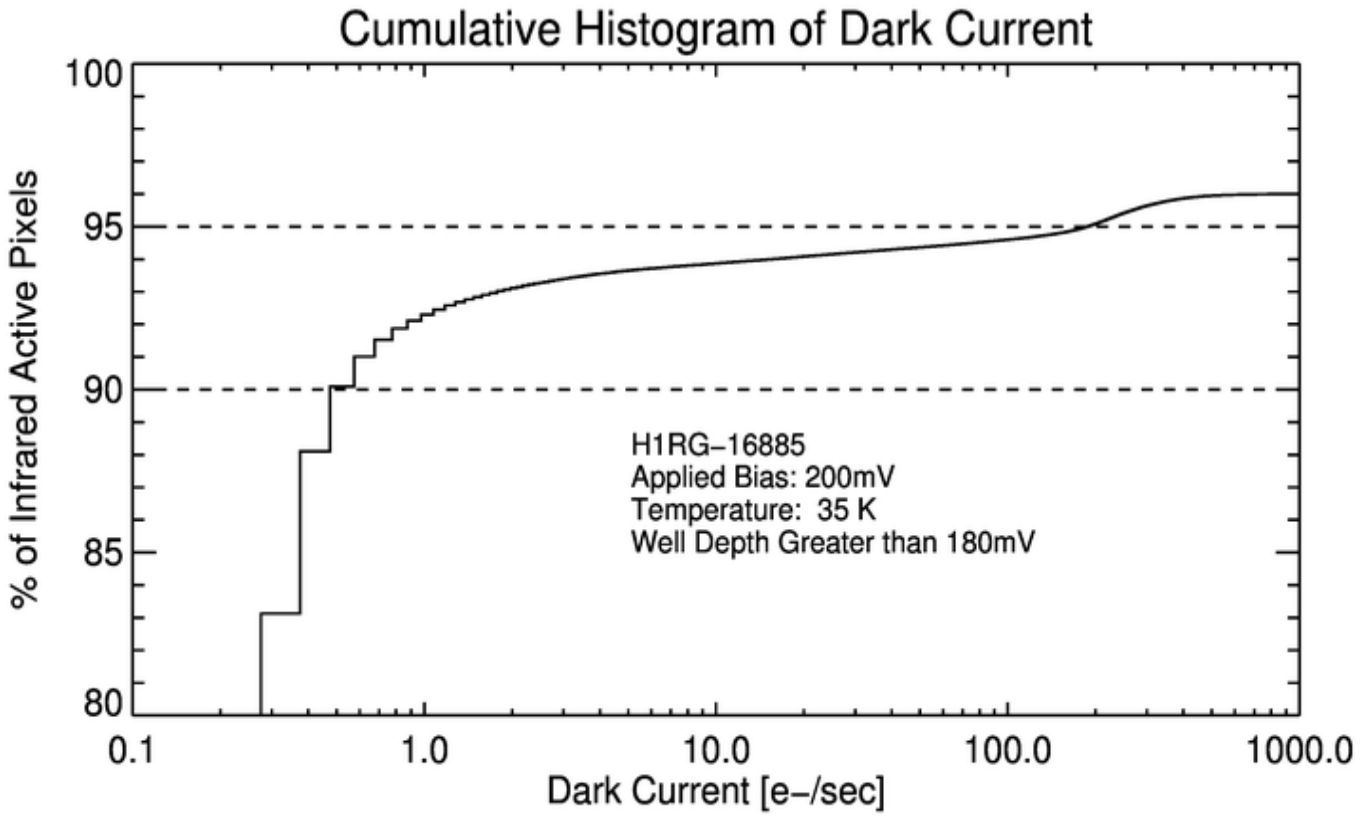

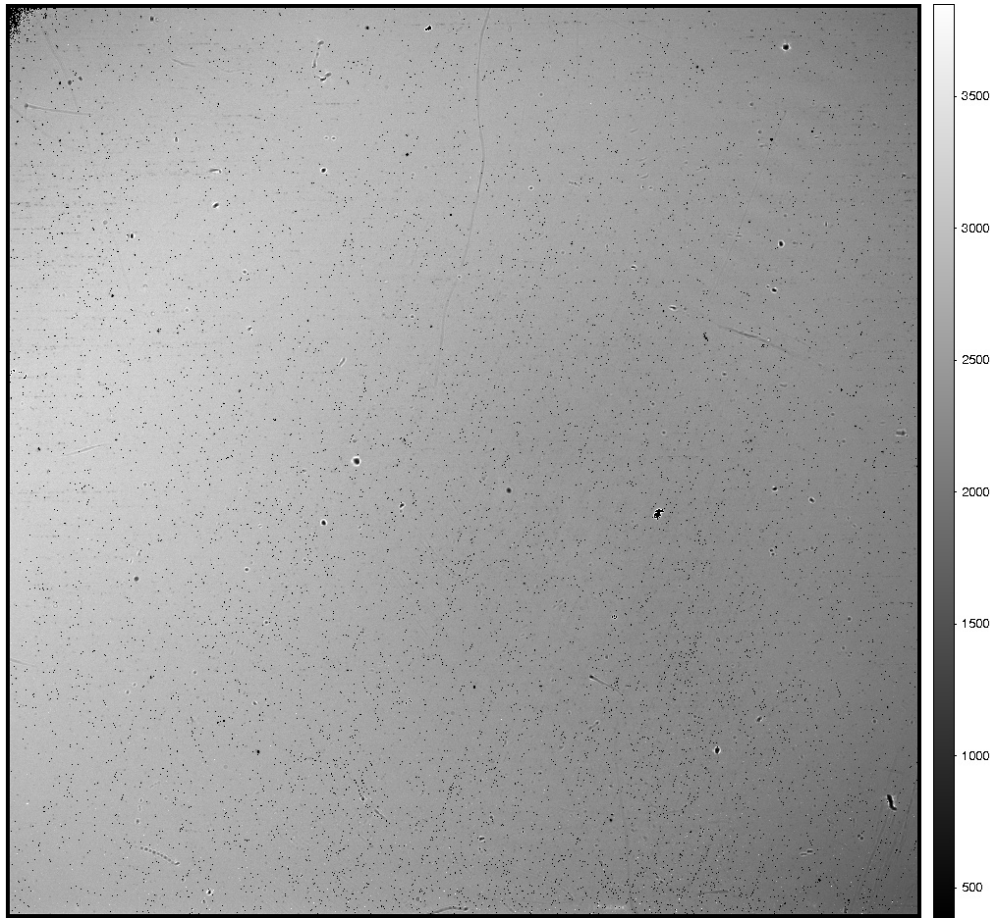

Quantum efficiency and uniformity excellent

NEOCam (Dr. Amy Mainzer, JPL, PI)

- A proposed IR mission to survey all Near Earth Objects (asteroids and comets) and identify their properties, orbits, and evolutionary significance
- Addresses congressional mandate to inform US of potentially hazardous objects which may impact the Earth, like Chelyabinsk
- Augments existing visible observations – identify very dark NEOs (in the visible) by their thermal emission at 10 μm with LWIR arrays we developed

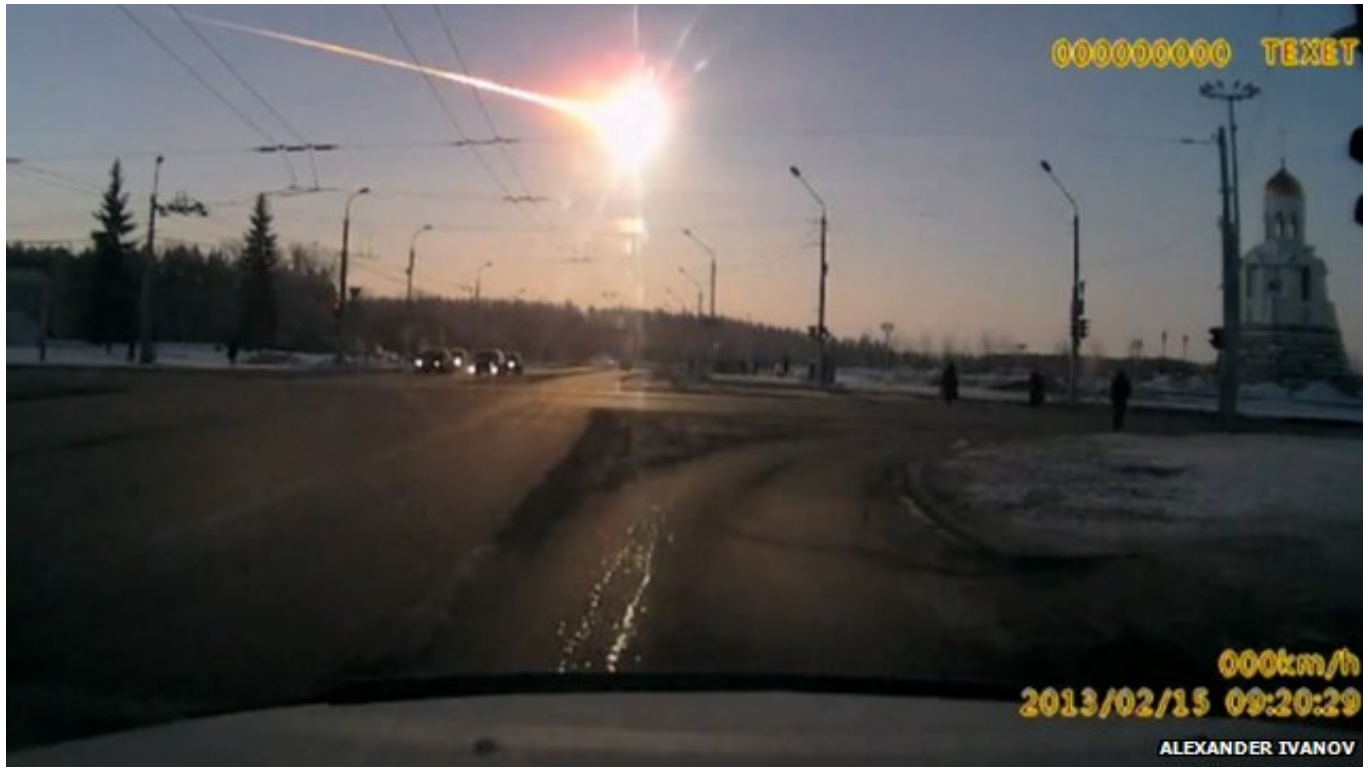

Chelyabinsk. NEOCam will interrupt the survey to perform targeted follow-up of imminent collision risks

Raytheon Contract

- **Raytheon asked Pipher/Forrest lab to evaluate some developmental competing 10 μm cutoff arrays bonded to a dual-use multiplexer readout**
- **ITAR restrictions in terms and conditions were emphasized: ORPA stated research could not be conducted onsite**
- **Exelis (formerly ITT) collaborators on a different project allowed us to test in their lab – all our equipment had to be moved, and even data could not be reduced onsite at the university**
- **Delays to project completion because of transport of equipment, and no after hours access**
- **ONLY WAY WE COULD CONDUCT THIS RESEARCH**

Foreign Collaborators on Space Missions

- **I act as liaison on the Canadian FGS/NIRISS (fine guidance sensor and near-IR imager and slitless spectrograph) team for JWST (James Webb Space telescope) since I have dual citizenship**
- **ITAR regulations prohibited Canadian involvement in development details of the MWIR HgCdTe detector arrays produced by Teledyne**
- **As liaison I was able to hear relevant details during the process of development, including during a GSFC Tiger Team investigating failures in the JWST detector arrays**
- **Canadian investigators were essentially held hostage, and refused to pay for replacement arrays: GSFC paid for them**
- **A second example: ESA was interested in LWIR detector technology for DARWIN, but could only buy black boxes from US Industry – no involvement with design**

LLE Experience

- **John Schoen describes similar invasive requirements to specific research, although he at least is able to have work described below done at LLE (similar to our Teledyne work)**
- **Export controls on high intensity laser threshold coatings to optical elements**
- **Their work-around – the control specifications for the coatings were devised by US citizens, and kept in a specially locked area under a technology control plan. Technicians who apply the coatings are not privy to the specifications.**
- **John has a long-term concern about controls relating to high intensity lasers – too much room for interpretation**

Engineering Colleagues' Experience

- **Colleagues at the engineering schools at University of Rochester (Optics, Mechanical Engineering) have not been able to resolve many issues with ORPA and/or their funding agencies w.r.t. Export Controls**
- **Engineering graduate programs have ~50% foreign nationals in experimental fields**
- **Specific examples follow**

Engineering Colleagues' Experience continued

- **Duncan Moore and Jim Zavislan are building instruments for non-military application, but need to purchase an IR camera for the instrument**
- **Moore's 2-5 μm interferometer contract would meet the basic research exemption, but the FLIR cameras SC 6700 and A6700sc are ITAR!! - uses InSb detector arrays**
- **There are MANY such IR cameras available around the world for sale and some even advertise "no ITAR controlled components"**
- **Moore's research will lead to measurements of optical materials for refractive optics – existing lenses are either very complex, or do not cover the required wavelength range**

Engineering Colleagues' Experience continued

- **Jon Ellis in Engineering is building next generation instruments, unrelated to military objectives (e.g. building a distance measuring interferometer), but design principles he uses and instrumentation he wishes to use are deemed Dual Use by government**
- **Dual use categories comprise a gray area; not sufficiently definitive**
- **Jon has had two awarded contracts turned down by ORPA, and two others modified with reduced budgets due to ITAR**
- **All of his research is fundamental but took 3 months negotiations between DoD and ORPA for awarded contracts accepted by ORPA**

Engineering Colleagues' Experience continued

- **Jim Zavislan also requires a 3-5 μm camera for research he is conducting to explore the emissivity of the eye's tear film as an indicator of health - POTENTIALLY EXTREMELY IMPORTANT DIAGNOSTIC FOR HEALTH CARE**
- **He needs emissivity over the complete 3-7 and 7-14 μm bands OR the 7-10 and 10-12 μm bands to evaluate the tear's climate**
- **Commercial microbolometer LWIR cameras are available, and are not ITAR**
- **Thermal images of patient's eye on next 2 slides – if emissivity constant, intensity is proxy for temperature**

LWIR Thermal image of dry eye patient immediately after blink

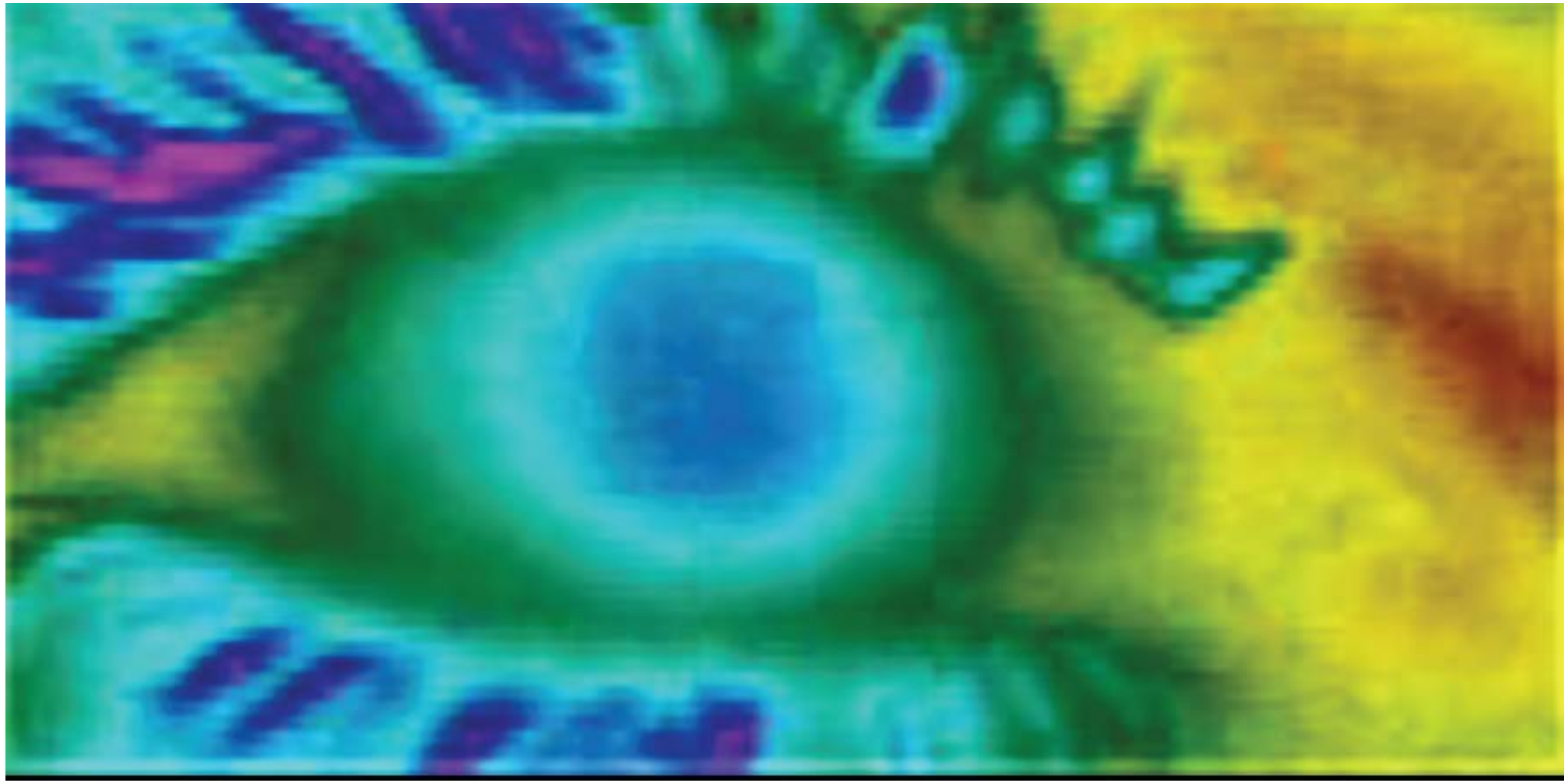

LWIR Thermal image of dry eye patient 5 sec after blink

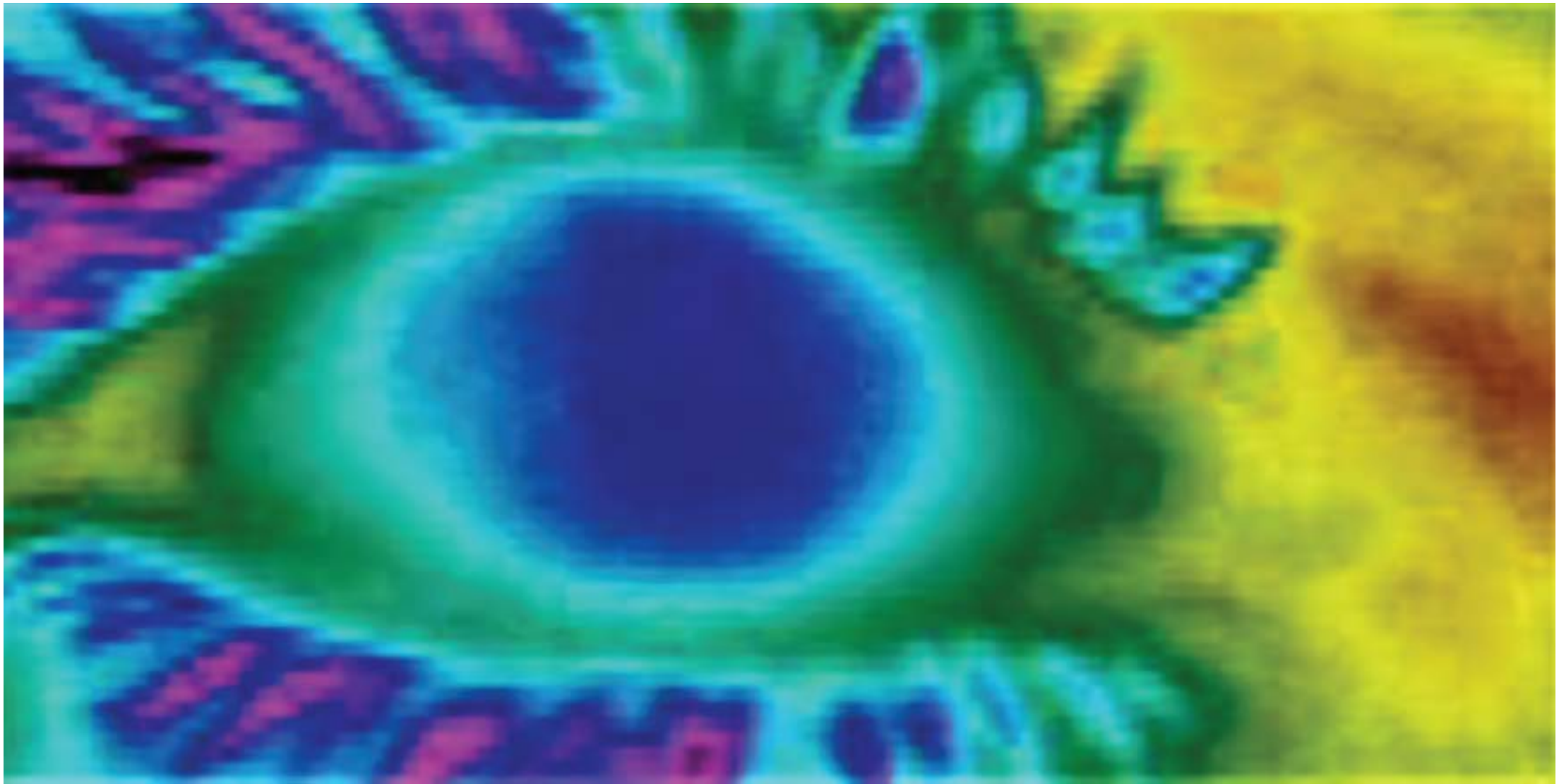

Engineering Colleagues' Experience continued

- **Jim Fienup is interested in optical reconnaissance and surveillance, issues related to space telescopes for astronomy, in microwave synthetic-aperture radar – and cannot pursue these because of export controls**
- **He has had to turn down multiple subcontract opportunities with different aerospace contractors on DARPA projects because ORPA would not allow anything with ITAR provisions in the prime contract, even when the work at UR would not have ITAR content. Once DARPA refused to deal with paperwork relating to the university basic research exemption**
- **One unique workaround found whereby students were funded on unrestricted IR&D funds from the contractor on a grant, synergistic with the DARPA effort, but not formally part of it. DARPA was aware of the workaround.**

Engineering Colleagues' Experience continued

- **Jannick Rolland (recipient of the OSA David Richardson Medal 2014) is sufficiently concerned that she does not apply for 30% of the potential grants for which she is qualified and interested**
- **Her instrumental design work cannot be demonstrated at the University of Rochester if she cannot purchase the required sensors for a working system**
- **Some research universities have overcome such issues by building a special ITAR controlled lab – e.g. Lincoln Lab at MIT**
- **Smaller research universities do not generally have that option, disadvantaging them and their students: an exception, Air Force Center of Excellence for laser radar research at U. Dayton**

Administration View

- **Gunta Liders, Associate VP for Research and Project Administration, speaks for research universities with a relatively small fraction of professors engaged in work deemed export controlled**
- **Cost to implement security measures prohibitive**
- **Projects often awarded to an industry as prime sponsor, which in turn makes awards to university PIs**
- **While there have been many DoD directives written to address fundamental research issues, the sponsors largely ignore these memos**

Industry View

- **Teledyne tells us that they are losing business to detector vendor SOFRADIR (France) who do not have ITAR restrictions**
- **And the Chinese are coming along – “soon they will eat our lunch”**

Technology Described in Open Literature

- **John Tarduno reports that a technology he uses fell on a commerce list concerned with "deemed export"**
- **In a university situation, a deemed export might occur when an investigator requires a foreign national to have access to or use of a controlled laser or spectrometer, for example. A determination must be made to identify whether or not an export license is needed prior to that individual accessing or using the instrument.**
  - **This designation inhibits university teaching and research**

National Security Concerns vs. Basic Research

- **Engineering currently has many Chinese graduate students and the Forrest/Pipher group has had 3 Chinese engineers in the past**
  - **Valid National Security concern, but a real problem when research is fundamental and basic, but "dual use" means research on university campuses precluded**
- **ITAR concerns lead some industries to an extremely conservative stance, when their actual concern is the proprietary nature of their products – ITAR is a convenient excuse for industry**
- **Commercial products such as FLIR MWIR cameras are competing against similar cameras produced around the world: US university researchers prefer to buy US cameras since they are generally the best available**
  - **Some European cameras are beginning to be competitive**

Examples of Commercial IR Cameras

- **US: FLIR, CalSensors, IRCAMERAS**
- **Belgium: Xenics**
- **Germany: InfraTec**
- **France: Sofradir**
- **Canada: Telops**
- **Italy (IR in UK): Selex ES (advertises “no ITAR controlled components”)** ?????

SLX MERLIN

HIGH PERFORMANCE MWIR THERMAL IMAGING CAMERA

Selex ES's latest "3rd Generation" thermal imaging camera uses the latest staring focal plane technology to provide high performance, high resolution, passive Mid Waveband Infra- Red (MWIR) imaging in day, night and poor visibility for land, sea and airborne operations.

The thermal imaging camera uses the high resolution "Merlin" MCT detector array developed under UK MOD funding on the Albion 3rd Generation development programme. The detector is manufactured using Selex ES's proprietary MOVPE on GaAs process to achieve outstanding performance, image uniformity and pixel operability. This leading edge detector is coupled with Selex ES's latest generation of advanced image processing electronics to achieve superior image quality.

An integrated microscan module is optional, to provide 3Megapixel resolution and enhanced range performance using digital zoom technology. The SLX-Merlin camera has been designed as a compact, high performance unit which can be applied to a wide range of thermal imaging applications by system integrators and OEMs.

KEY BENEFITS

- Affordable, high performance 3rd Generation camera
- High resolution MWIR imaging
- Optional Microscan providing:
  - 3 Megapixel resolution images
  - and/or combined e-zoom and microscan for narrow FoV: reducing lens size, complexity and cost
- Military specification
- Lightweight, compact design
- Flexible architecture enables remote location of processing electronics for small enclosures
- Ease of system integration
- Flexible video output and control interface
- Low through-life cost of ownership
- No ITAR-controlled components. <=

Our Wish List

- **Export rules need to be rigorously but narrowly defined**
- **Need knowledgeable people making the rules – e.g. items must actually be dual use: e.g. LWIR low background astronomy space arrays should not be on dual-use list**
- **If similar instruments /equipment of comparable performance are available from foreign vendors, should not be included on the list**
- **Export lists need review to assess whether they list technologies fully described in the literature, hence irrelevant w.r.t. deemed exports**
- **University basic research, and the concept of shared scholarship is integral to the Nation's scientific strength in an increasingly technologically savvy world**
  - **The US runs the risk of falling far behind the global scientific competition**

VarioCAM® High Definition

Thermographic Solution for Universal Use

InfraTec

Europe's leading specialist for infrared sensors and measurement technology

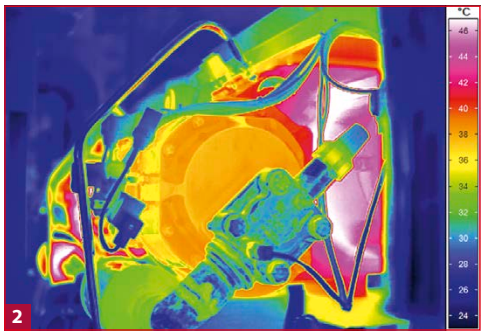

Microbolometer camera with up to (1,024 × 768) IR pixels
Optomechanical MicroScan with up to (2,048 × 1,536) IR pixels
Frame rate of up to 240 Hz, GigE-Vision interface
Integrated light-sensitive digital 8 MP camera
5.6" colour TFT display with (1,280 × 800) pixels
Laser rangefinder and GPS sensor
Wireless camera control and data acquisition via WLAN
Made in Germany

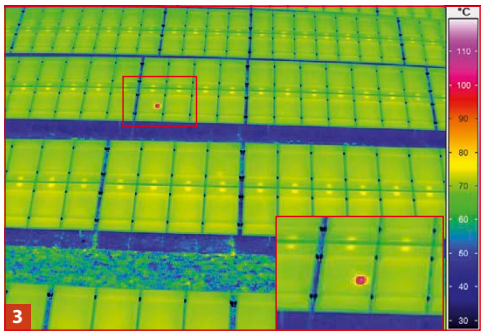

1) VarioCAM® HD from Jenoptik
2) Transmission
3) Photovoltaic power plant

NEW

www.InfraTec.eu

JENOPTIK

Latest information on the internet.

Spectral range	(7.5 ... 14) µm
Detector	Uncooled Microbolometer Focal Plane Array
Detector format (IR pixels)	(1,024 × 768) with built-in opto-mechanical high-precision scan unit (2,048 × 1,536)* (640 × 480) with built-in opto-mechanical high-precision scan unit (1,280 × 960)*
Temperature measuring range	(-40 ... 1,200) °C, > 2,000 °C*
Measurement accuracy	± 1 °C or ± 1 %*, otherwise ± 1.5 °C or ± 1.5 %
Temperature resolution @ 30 °C	Better than 0.03 K*, otherwise better than 0.05 K
Frame rate	Fullframe: 30 Hz (1,024 × 768), subframe formats*: 60 Hz (640 × 480) / 120 Hz (384 × 288) / 240 Hz (1,024 × 96) Fullframe: 60 Hz (640 × 480), subframe formats*: 120 Hz (384 × 288) / 240 Hz (640 × 120)
Image storage	SDHC-card, GigE-Vision up to 240 Hz, internal real-time storage
Lens mount	Bayonet to comfortably switch objectives, automatic objective detection and data transfer
Focus	Motor-driven, automatic or manual, accurately adjustable, laser-supported autofocus
Zoom	Up to 32x digital, stepless
Digital colour video camera	8 Megapixels, with a LED video light, vision mixer and cross-fade feature
Dynamic range	16 bit
Interfaces	GigE-Vision, DVI-D, C-Video, RS232, Trigger, Analog output*, Digital I / O*,WLAN, USB 2.0, Bluetooth, GPS
Tripod adapter	1/4 " photo thread
Power supply	Lithium-Ion battery (quick rechargeable, with status display), AC adapter
Laser range finder*	Red semiconductor laser, laser safety class 2, range up to 70 m
Display	5.6 " colour TFT display (1,280 × 800) pixels, daylight suited
Colour viewfinder*	Tiltable colour viewfinder with diopter compensation
Single-handed operation	Intuitive operation with ergonomically arranged function keys and multifunctional joystick, programmable keys
Storage and operation temperature	(-40 ... 70) °C, (-25 ... 50) °C
Protection degree	IP54, IEC 529
Impact strength/vibration resistance in operation	25 G (IEC 68 - 2 - 29), 2 G (IEC 68 - 2 - 6)
Dimensions, weight	(210 × 125 × 55) mm, 1.7 kg
Automatic functions	Autofocus, permanent autofocus, automatic distance indicator, distance-dependent calculation of permitted pixel size, Autoimage, Autolevel, Min./Max. temperature alarm: visual/acoustic, alarm triggered image storage
Measurement functions	8 free choosable, movable measurement fields/-points, automatic hot/cold spot display: global and internal defined measurement fields, differential temperature measurement: temporally/locally, temperature profile, histogram, differential image, isotherms display
Further functions	EverSharp function (multifocus), shutter-free operation, temperature alarm, image merging, synchronous display of thermal and visual image in real-time
Analysis and evaluation software*	IRBIS® 3, IRBIS® 3 professional, IRBIS® 3 view, IRBIS® 3 plus, IRBIS® 3 remote HD, IRBIS® 3 online, IRBIS® 3 process, IRBIS® 3 active, IRBIS® 3 mosaic, IRBIS® 3 vision, FORNAX 2.0

* Depending on model

For the first time a handheld thermographic microbolometer cameras with a **detector format of (1,024 × 768) IR pixels** is available: The **VarioCAM® HD** is manufactured by the **German manufacturer Jenoptik**. It comes with a resolution 2.5 higher than pevious high-class models. In connection with the outstanding thermal resolution and **unique precision optics**, crystal clear high-precision thermal images can be taken. Large test objects can be captured thermographically with unprecedented efficiency.

Detector format (IR pixels)		**(640 × 480)**	**(1,024 × 768)**
Lens	Focal distance (mm)	FOV (°)	FOV (°)
Super wide-angle lens	7.5	(93.7 × 77.3)	(98.5 × 82.1)
Wide-angle lens	15	(56.1 × 43.6)	(60.3 × 47.0)
Standard lens	30	(29.9 × 22.6)	(32.4 × 25.6)
Telephoto lens	60	(15.2 × 11.4)	(16.5 × 12.4)
Telephoto lens	120	(7.6 × 5.7)	(8.3 × 6.2)

Macro and microscopic lenses	Min. object distance (mm)	Pixel (µm)	Pixel (µm)
Close-Up 0.2× for 30 mm	69.7	75	51
Close-Up 0.5× for 30 mm	32.6	42	29
Close-Up 0.5× for 60 mm	78.3	42	28
Microscopic lens M=1.0×	40	25	17

InfraTec GmbH
Infrarotsensorik und Messtechnik

Gostritzer Straße 61 - 63
01217 Dresden / GERMANY
Phone: +49 351 871-8630
Fax: +49 351 871-8727
E-mail: thermo@InfraTec.de

© InfraTec 07/2014 (All stated product names and trademarks remain in property of their respective owners.)

VISIONMAP
Digital mapping systems

The largest footprint in the market

A3 Airborne Digital Mapping Camera

The well known A3 airborne digital camera has already become synonymous with productivity in the aerial survey and mapping industry

With the largest footprint of 60,000 pixels across flight track, efficient imagery collection of large areas and high-resolution vertical and oblique imagery, A3 airborne digital camera is the most advanced mapping camera available today

A3 largest footprint

With 60,000 pixels across flight track, A3 presents by far the largest footprint of aerial cameras available in the market.

Superior high-resolution imagery

A3 camera allows your airplane to fly higher, faster and with wider flight line spacing, covering a larger area than other systems do. A3 camera's long focal length capture high-resolution imagery from higher altitudes, simplifying the flight planning and operations of survey projects.

Multiple products in one flight

With a wide field-of-view (up to 109 degrees), A3 collects multi-directional images of each point in both vertical and oblique angles.

Compact system, easy installation

A3 was designed for complete ease of use, with compact size and light weight. The camera is easy to install and use on most camera-ready aircrafts.

Larger coverage, same resolution

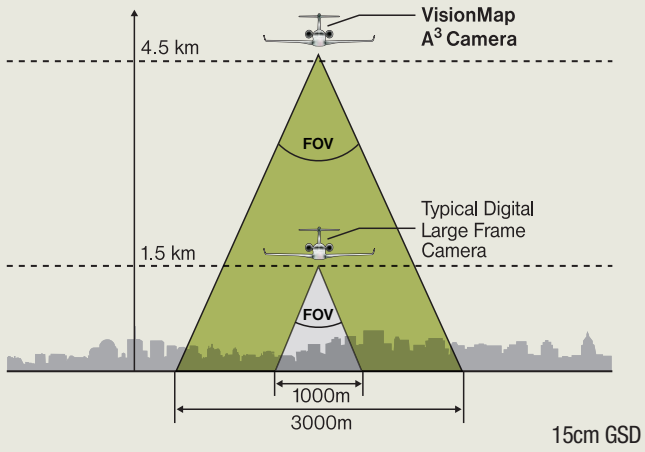

A3 aerial survey productivity

GSD (m)	0.03	0.05	0.10	0.15	0.20	0.25	0.30
Altitude above ground (feet)	3,281	5,468	10,936	16,404	21,872	27,340	32,808
Typical ground speed (knots)	160	180	210	245	275	325	370
Flight-line distance (m)	237	529	2,184	3,728	5,596	7,809	10,392
Footprint width (m)	590	1,322	5,569	9,351	14,009	19,451	25,957
Net coverage for orthophoto production (km^2/hour)	**70**	**176**	**849**	**1,692**	**2,850**	**4,700**	**7,121**

A3/A3 CIR specification summary

Camera Type	A3/ A3 CIR
Mechanical Specifications	
Total weight (kg)	35
Size (cm)	53 x 53 x 53
Optical Specifications	
Number of lenses	2
Focal length (mm)	300
Aperture	f/4.5
Exposure principle	Global shutter
CCD type	KAI-11002
CCD number	2
CCD dynamic range (bit)	12
CCD pixel size (μ)	9
CCD array (single frame size,pixel)	4006 x 2666
Double frame Size (pixel)	7812 x 2666
One lens FOV: Along flight line (degree) Across flight line (degree)	 6.58° 4.58°
Spectral characteristics (nm)	R 600-740 G 510-580 B 415-515 A3 CIR : NIR 690-780
Operational Specifications	
Frame rate (fps)	7.5
Max operational FOV (degree)	109°
Max number of frames in one sweep	66 A3 CIR: RGB 33; NIR 33
Max footprint size (pixel)	~ 62,000 x 8,000 A3 CIR ~ 62,000 x 4,000
Motion compensation	(FMC,RMC,VC) Forward, Roll, Vibration

Camera Type	A3/ A3 CIR
Image Specifications	
Image geometry	Central projection
Color	RGB A3 CIR: RGB + NIR
Image file format	JPEG2000, TIFF
Flight Specifications	
Minimal flight altitude (feet)	2,700
GSD at minimal flight altitude (cm)	2.5
Aircraft ground speed (knot)	50 – 500
Forward overlap between sweeps in one flight line (%)	30% - 90%
Image on-the-fly viewing	Yes
Temperature (°C)	-15° to 55°
On-board Storage	
On-board storage capacity (TB)	1.0
On-board storage type	SSD - Solid State Drive
On-board storage exchangeability	Yes
System Specifications	
DC supply voltage (V)	28V (26V-32V)
Current consumption (A)	2.5 A (Max–4A)
Power consumption (W)	<120W/28 VDC
GPS type	L1/L2
Image download interface	Gb Ethernet
Writing bit rate (MB/sec)	165

About VisionMap

VisionMap LTD. is a leading provider of state-of-the art digital automatic aerial survey and mapping systems. VisionMap created an innovative data collection and data processing system which optimized geospatial imagery collection and processing, setting a new standard for productivity. VisionMap systems are successfully deployed worldwide.

The information contained in this publication is provided for general guidance only and shall not in any circumstances constitute a trade description. The Company reserves the right to change or amend specifications without prior notice.

VisionMap A3. Largest footprint. Fastest processing.

New Export Rule for Defense-Funded Technology Raises Alarms

By Sandra I. Erwin

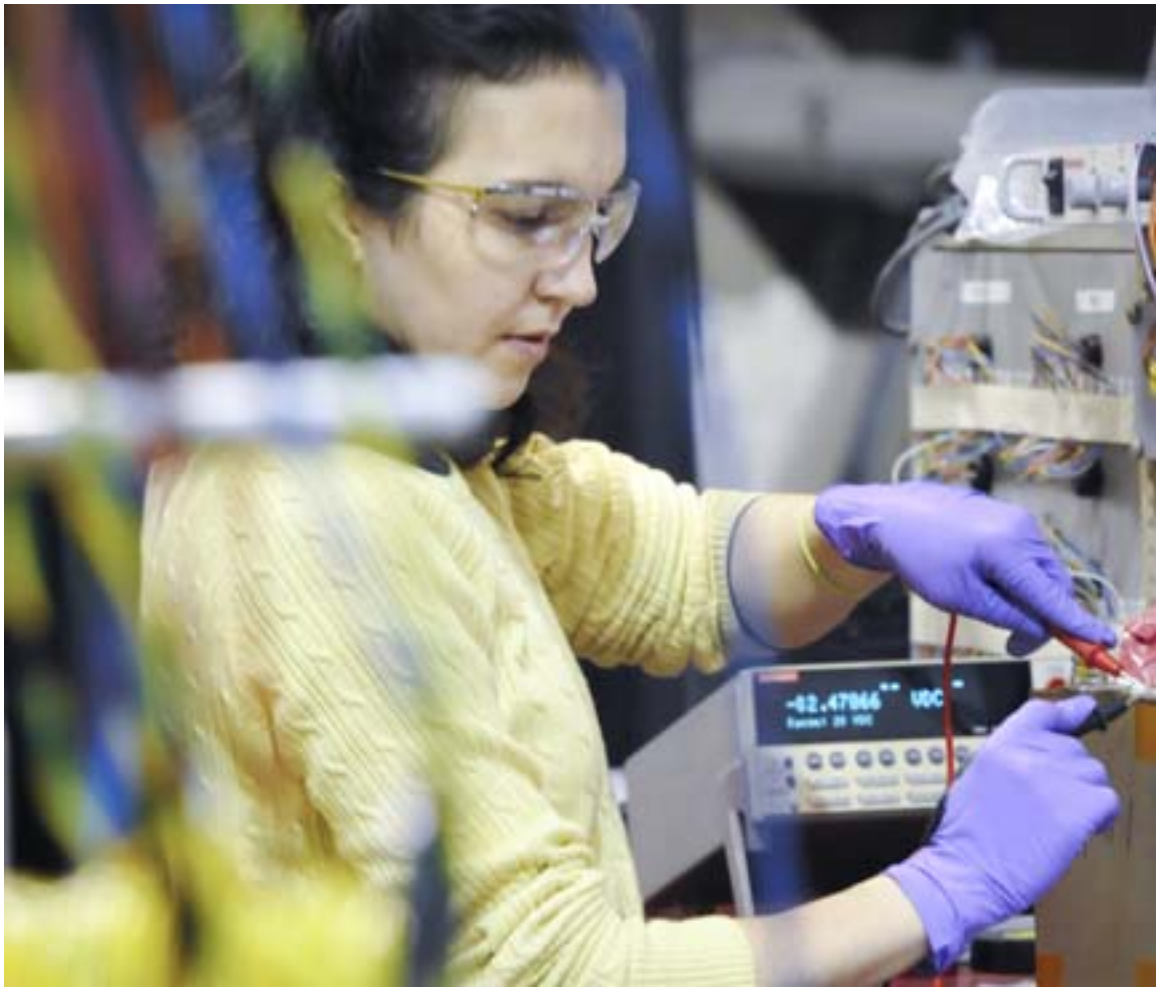

U.S. manufacturers have hailed the Obama administration's six-year effort to ease the red tape for exporters. Defense companies that make products with commercial applications especially have benefitted from reforms that have sought to draw a clear distinction between technologies that are uniquely military and those that are dual use.

One of the key goals of the reforms was to specify what items are regulated as "defense articles" by the State Department — as opposed to commercial products regulated by Commerce — and end the ambivalence that has vexed exporters.

So it might come as a surprise to Pentagon contractors that a new rule that affects electronic equipment would by default classify as a "defense article" any

electronics developed with Defense Department funding, regardless of whether the technology is a sensitive military system or intended also for civilian applications.

The regulation, which affects electronic systems whose development is funded by any Defense Department contract dated July 1 or later, has the potential to become a compliance nightmare for companies that rely on government contracts to design products that they hope to commercialize later.

The rule has industry attorneys scratching their heads because it seems to run counter to the spirit of the administration's export control reform effort. Many industry CEOs have said the reforms have helped simplify the licensing process and removed onerous red tape from the exports of commercial technologies that once were categorized as defense articles under the U.S. Munitions List.

The electronics provision could have significant ramifications, said Jason M. Silverman, a partner at McKenna Long & Aldridge who specializes in government contracting. "Basically anything with a digital component that was developed with Defense Department funds would be controlled under ITAR."

The International Traffic in Arms Regulation controls exports of defense-related products and services. The U.S. Munitions List has 21 broad categories of products that are subject to the ITAR. The reforms have focused on each separate category. Electronic equipment and systems fall under category 11. The newly introduced federal regulation applies to "developmental electronic equipment or systems funded by the Department of Defense via contract or other funding authorization."

The definition of what is being regulated under ITAR is very broad, Silverman told National Defense. The government arguably is departing from the original purpose of export control reforms, which was to stop using catchall designations for product categories. "There's no clarity on what is developmental," he said. "This definitely has the potential to expose companies" that may not be aware that the technology they are developing under a defense contract falls under ITAR control. "I can see people being caught off guard."

The specific impact of the rule on exporters might not be known for years, but attorneys like Silverman and others are warning of a possible regulatory quagmire particularly for small businesses that might not have the legal expertise. Big defense contractors have a compliance apparatus in-house to deal new regulations, but startups and commercial firms may be ill equipped to handle complex regulatory requirements, said Silverman.

A sticky situation would be, for instance, a company developing technology that, even though it was funded by the Pentagon, would have applicability in civilian markets such as medical devices or surveillance sensors. In such cases, the only

way to avoid ITAR control would be to have the contract specifically state that the technology is both for “military and civilian applications.” Another option would be to file a “commodity jurisdiction” request to the State Department that would exempt that product from the ITAR.

The rule could come into play for any U.S. company that does any offshore research, development or manufacturing.

“Government contracting officers and contractors are going to have to be sensitive to this,” said Silverman. For contractors, especially, there is a lot at stake if all of a sudden they find themselves having to comply with regulations of which they were not aware. This is precisely the type of confusion that export control reforms were intended to avert, he said. “There’s supposed to be added clarity to these categories. You’re supposed to be able to classify items as either military or commercial and the reform was supposed to facilitate that process.”

Under the new rules, contractors might have to factor the cost of ITAR compliance into their negotiations with the government, or they could work out an agreement so the contracting officer states the product has commercial applications and therefore would not be ITAR controlled.

The notion that a product is ITAR controlled by nature of its funding is not new in export regulations, Silverman pointed out. “But this takes it a step further.”

A similar provision was put in category 15 for space systems. Hosted payloads and other subsystem development funded by the Defense Department would automatically be ITAR controlled unless it is exempted by language in the contract or by a State Department commodity jurisdiction ruling. Under category 8 (aircraft) the same rule covers developmental aircraft funded by the Defense Department.

The issue with category 11 is that, unlike aircraft, the lines between military and civilian application in electronic equipment and systems are much fuzzier so the rule could impact a wider universe of companies that make products in this category.

It is conceivable that, as a result of this rule, commercial companies might think twice before taking Pentagon money for any development work out of fear of falling under the ITAR regime, although that should not be a deterrent, said export attorney TJ Ogden. Companies should not use the ITAR as a crutch or fear the regulations, but should make sure they have proper knowledge of export control rules and set up a compliance program to deal with both the State and Commerce departments, said Ogden, who is director of defense exports at Defense Export & Logistics, a division of Pacific Propeller International.

Most of the export control reforms in general have been “very positive,” he said,

although the electronics rule is likely to cause some confusion. “It would be important for the government to make sure they make regulation more specific as opposed to broad brushing all electronic systems.”

Photo Credit: Defense Dept.

Posted at 2:33 PM by Sandra Erwin | Permalink | Email this Post | Comments (0)

Linear Stirling Cooler SX095

AIM

The SX cryocooler-series is our latest product family targeting 3rd Gen IR applications. The SX095 combines small size dimensions with outstanding specific performance and provides high reliability exceeding lifetimes of 15,000h.

The products compactness and cooling power meets the demand on lightweight high performance IR-technology. The SX095 provides a cooling capacity of more than 0.6W @ 80K, even at high ambient temperature.

The resulting performance margin allows detector temperatures down to 60K.

The SX095 can be used with AIM's cooler electronics AM7X or alternatively with customer's electronics.

Due to the sleeve design of the coldfinger (Titanium or optional Inconel®) the expander can be integrated and exchanged by the customer.

- **Outstanding specific performance**
- **High MTTF (>15,000h)**
- **High cooling capacity 1.3W (@80K; 23°C)**
- **Sleeve coldfinger, suitable for IDCA solutions**

Typical Performance Data

SX095 @ 80K

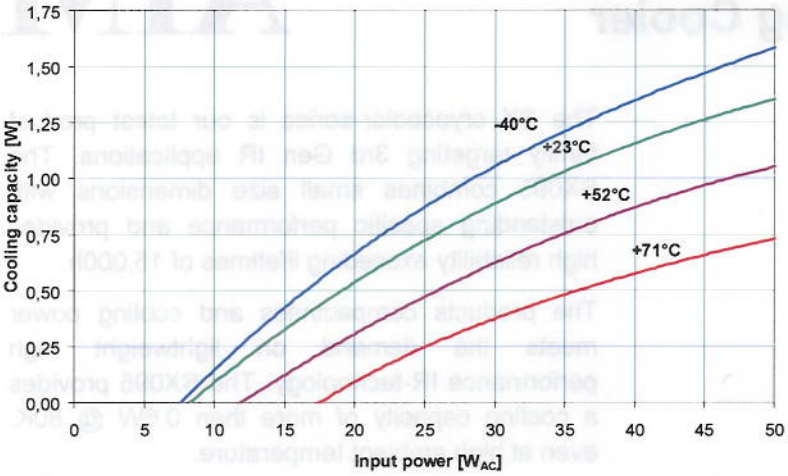

	SX095
Compressor diameter [mm]	44
Compressor length [mm]	118.5
Compressor weight [kg] (without coldfinger)	< 1.0
Supply voltage	6-20 V_{AC}
Cooler controller	ext.
Coldtip outer diameter [mm]	6 (1/4 inch)
Max. length of transferline [mm]	200
Ambient temperature range [°C]	- 54 to + 71

Applications

- 3rd Gen IR systems
- High performance IDCAs
- IR detectors operating at 60 - 120K (ambient temperature up to 80°C)
- Applications demanding high cryocooler reliability and reduction in maintenance costs

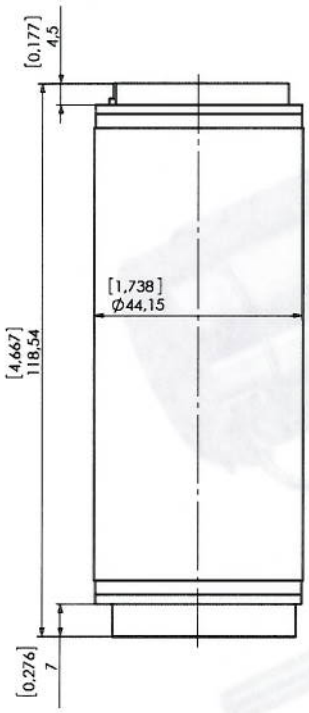

Dimensions SX095 compressor

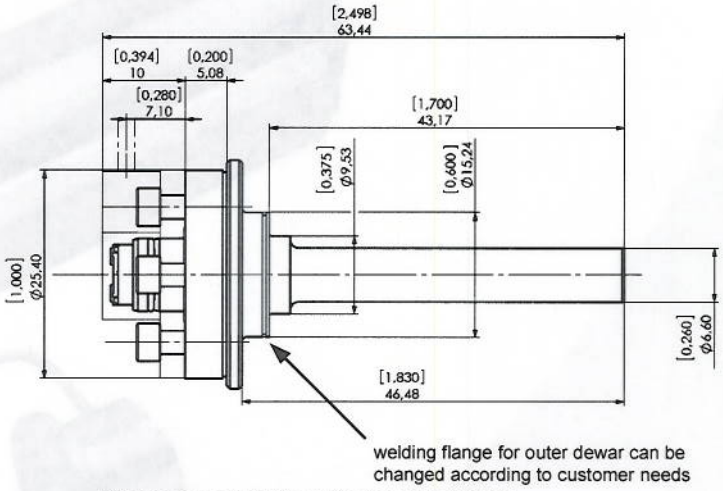

Dimensions AIM 6mm Sleeve Coldfinger

AIM INFRAROT-MODULE GmbH
Theresienstraße 2
D 74072 Heilbronn / Germany
Tel.: +49 7131 6212 - 310
Fax: +49 7131 6212 - 399
coolers@aim-ir.com
www.aim-ir.com

AIM reserves the right to change specifications to reflect latest changes in technology and improvement without prior notice / March 2010

HAMAMATSU

InGaAs linear image sensors

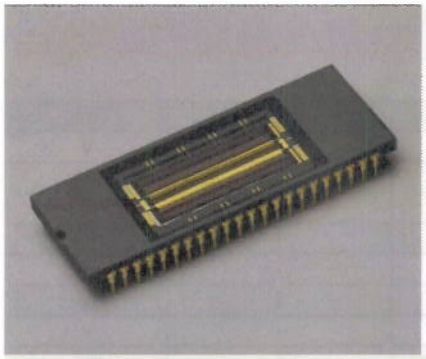

G10768 series

Near infrared image sensor (0.9 to 1.7 µm) with 1024 pixels and high-speed line rate

The G10768 series is a 1024-channel, high-speed infrared image sensor designed for applications such as foreign object screening and medical diagnostic equipment where a multichannel high-speed line rate is required. The signal processing circuit uses CTIA (Capacitive Transimpedance amplifiers) that allow signal readout while simultaneously integrating signals in all pixels via sample-and-hold circuits. A high-speed line rate is achieved through 8 output ports.

Features

- **1024 pixels [pixel size: 25 × 100 µm (G10768-1024D)**
  25 × 25 µm (G10768-1024DB)]
- **High-speed line rate: 39000 lines/s max.**
- **High-speed data rate: 5 MHz typ. (6.67 MHz max.)**
- **Choice of 4 conversion efficiency levels**
- **Timing generator incorporated**
- **Low dark current**
- **Room temperature operation**

Applications

- **Foreign object screening**
- **OCT (optical coherence tomography)**
- **Near infrared spectroscopy**

Related products (sold separately)

- **InGaAs multichannel detector head C10854**

General ratings (Typ. Ta=25 °C)

Parameter	G10768-1024D	G10768-1024DB	Unit
Cooling	Non-cooled		-
Number of pixels	1024		pixels
Pixel pitch	25		µm
Pixel size (H × V)	25 × 100	25 × 25	µm
Spectral response range	0.9 to 1.7		µm
Defective pixel	Less than 1%		-

Absolute maximum ratings

Parameter	Symbol	Value	Unit
Supply voltage	Vdd	-0.3 to +6.0	V
Clock pulse voltage	Vϕ	-0.3 to +6.0	V
Reset pulse voltage	V(RES)	-0.3 to +6.0	V
Gain selection terminal voltage	Vcfsel	-0.3 to +6.0	V
Operating temperature	Topr	-10 to +70	°C
Storage temperature	Tstg	-20 to +70	°C

Electrical characteristics (Ta=25 °C)

Parameter			Symbol	Min.	Typ.	Max.	Unit
Supply voltage			Vdd	4.7	5.0	5.3	V
Supply current			Ivdd	-	100	150	mA
Sample and hold voltage 1			Vref1	-	2.5	-	V
Sample and hold current 1			Iref1	-	-	1	mA
Sample and hold voltage 2			Vref2	-	2.5	-	V
Sample and hold current 2			Iref2	-	-	1	mA
Output reset voltage			Vref3	-	2.5	-	V
Output reset current			Iref3	-	-	1	mA
Element bias	Supply voltage		INP	3.3	3.5	3.6	V
	Supply current		-	-	-	1	mA
Ground			Vss	-	0	-	V
Clock frequency			-	0.5	5.0	6.67	MHz
Clock pulse voltage	High		Vϕ	4.7	5	5.3	V
	Low			-	0	0.4	V
Reset pulse voltage	High		V(RES)	4.7	5	5.3	V
	Low			-	0	0.4	V
Video output voltage	Vout+	High	Vout+(high)	-	4	-	V
		Low	Vout+(low)	-	2.5	-	
	Vout-	High	Vout-(high)	-	2.5	-	V
		Low	Vout-(low)	-	1	-	
Video data rate			fv	-	f	-	Hz

Specification (Ta=25 °C, fv=5MHz, Vdd=5 V, INP=3.5 V, Vref1=Vref2=Vref3=2.5 V, CE=1400 nV/e⁻, per 1 element)

Parameter	Symbol	Condition	Min.	Typ.	Max.	Unit
Peak sensitivity wavelength	λp		-	1.55	-	μm
Saturation charge	Qsat	Vϕ=5 V	-	0.25	-	pC
Dark current	ID		-5	±1	+5	pA
RMS noise voltage (readout noise)	N	Standard deviation Sample number 1000 Integration time 30 μs	-	2	6	mV rms
Saturation voltage amplitude	Vsat		-	2.5	-	V
Defective pixel *1	-	CE *2=1400 nV/e⁻ (worst-case condition)	-	-	1	%

*1: Pixels with dark current or RMS noise voltage higher than the maximum value.
*2: Conversion efficiency

Selection logic of conversion efficiency

Parameter	Symbol	Typ.	Cfa	Cfb	Cfc
Conversion efficiency	CE	1400 nV/e⁻	H	L	L
		280 nV/e⁻	H	H	L
		70 nV/e⁻	H	L	H
		14 nV/e⁻	H	H	H

Note: L=0 V (Vss), H=5 V (Vdd)

Equivalent circuit

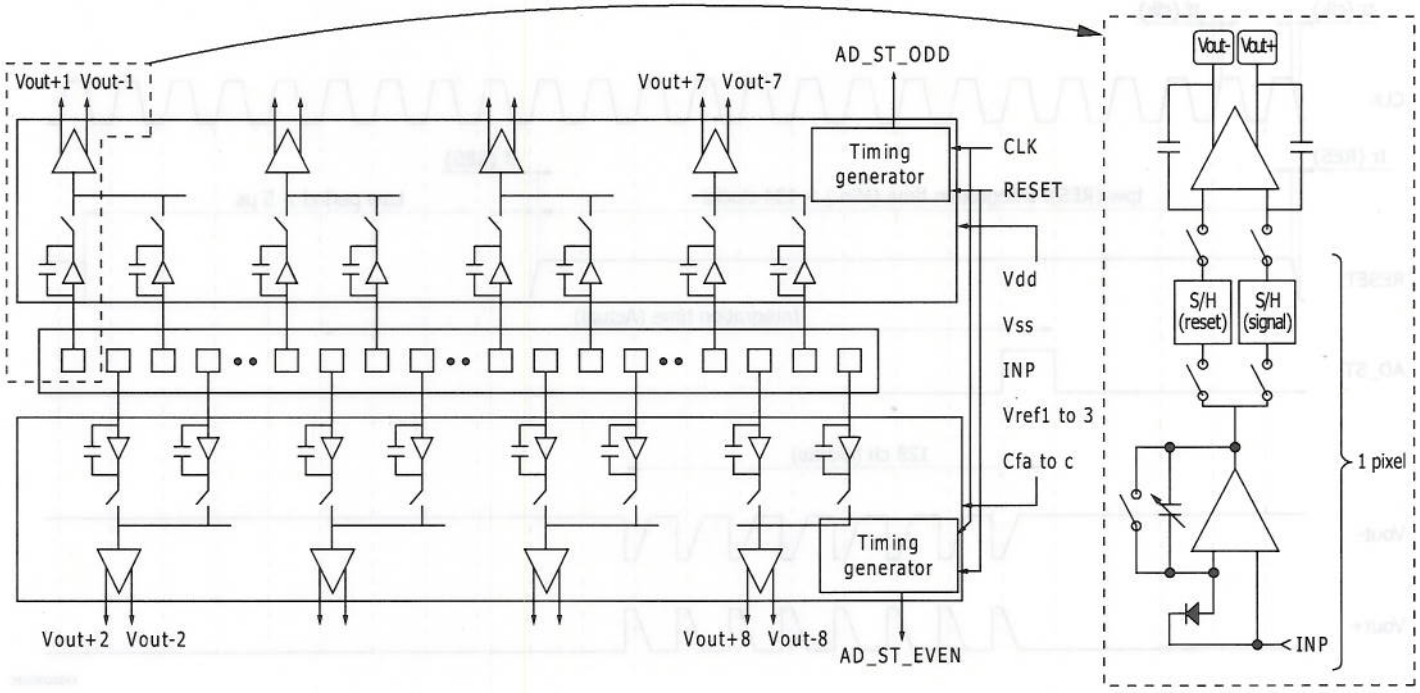

KMIRC0029EB

Connection example

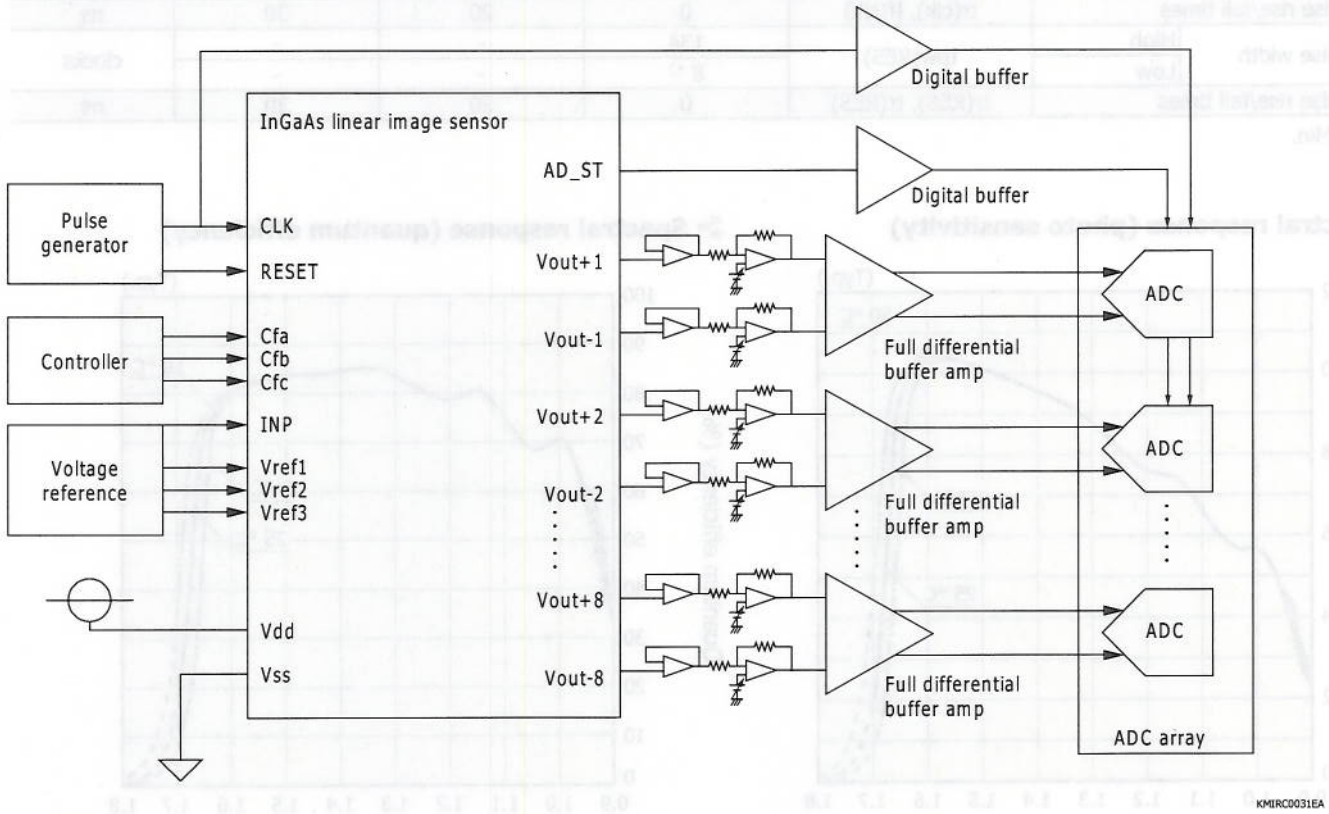

KMIRC0031EA

Notes:

- Sensor video output is fully differential, so use fully differential buffers to receive the sensor output.
- To obtain the fastest line rate, the odd and even pixels should be operated simultaneously so that the 8-port output is read out in parallel.

Timing chart

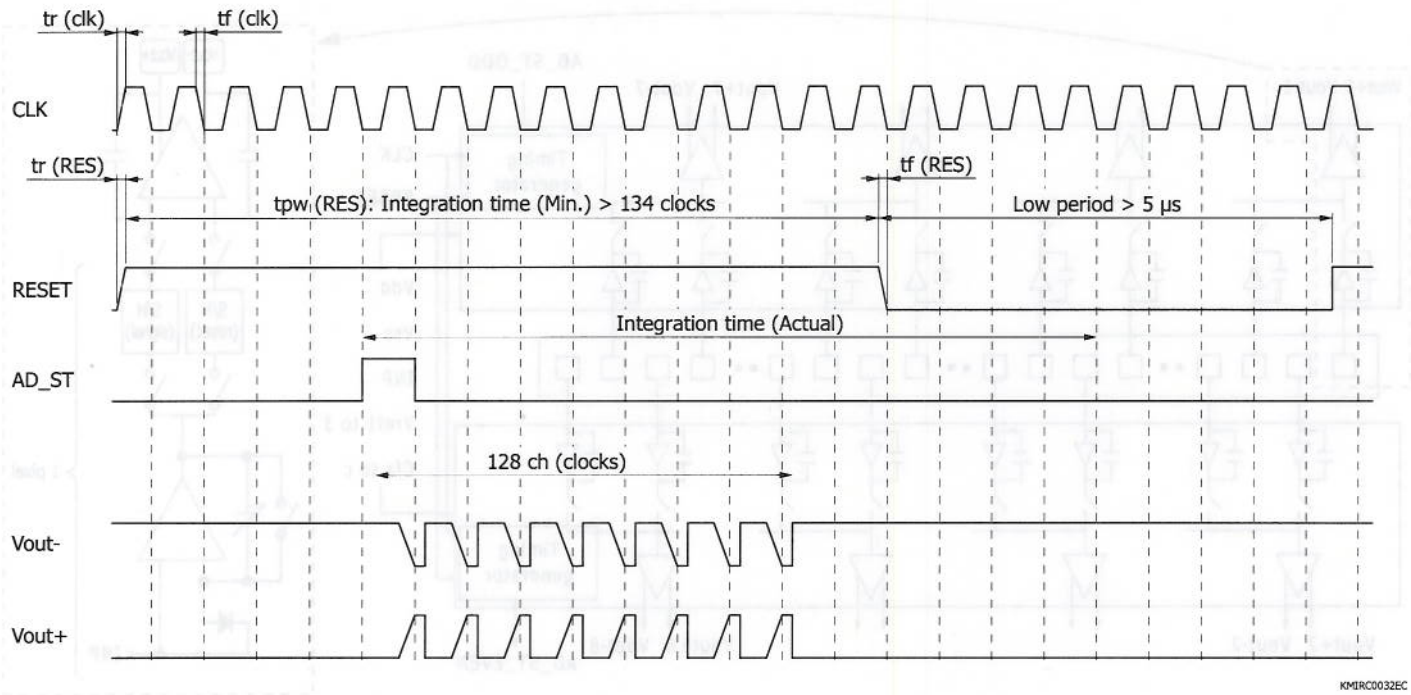

Parameter		Symbol	Min.	Typ.	Max.	Unit
Clock pulse width		tpwϕ	80	100	-	ns
Clock pulse rise/fall times		tr(clk), tf(clk)	0	20	30	ns
Reset pulse width	High	tpw(RES)	134	-	-	clocks
	Low		8 *2	-	-	
Reset pulse rise/fall times		tr(RES), tr(RES)	0	20	30	ns

*2: 5 μs Min.

Spectral response (photo sensitivity)

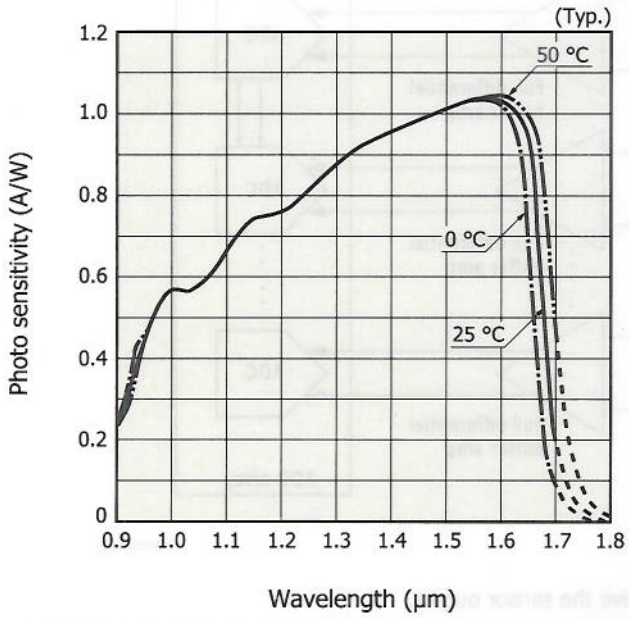

Spectral response (quantum efficiency)

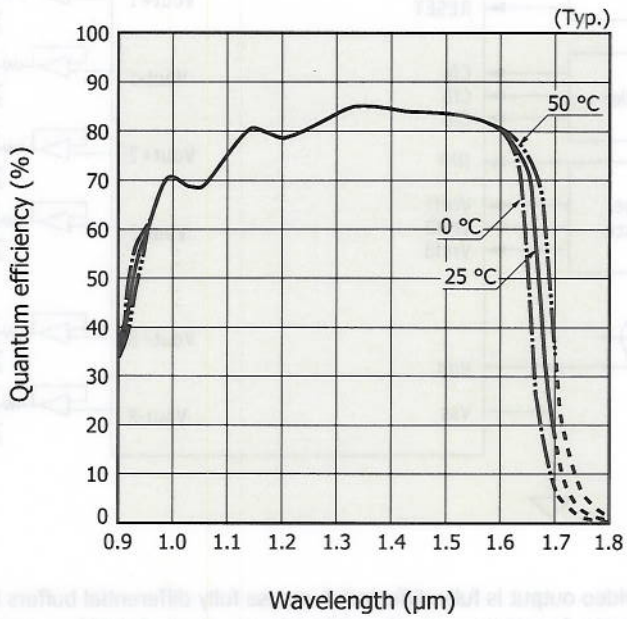

Dark current vs. temperature

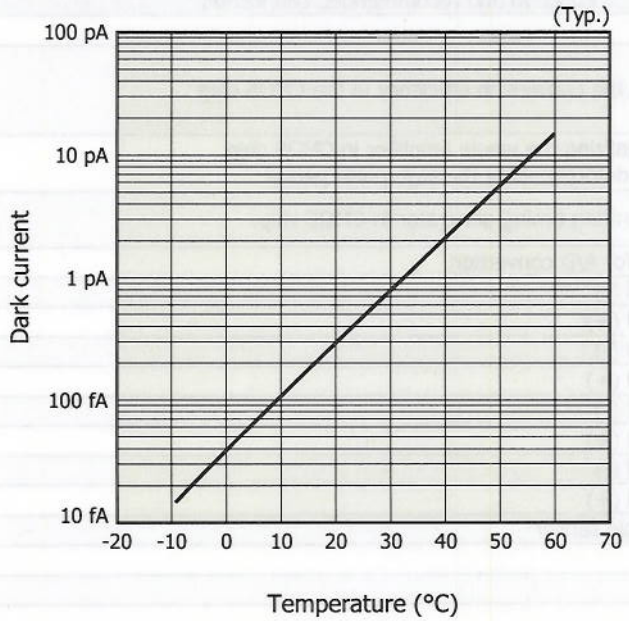

Dimensional outline (unit: mm)

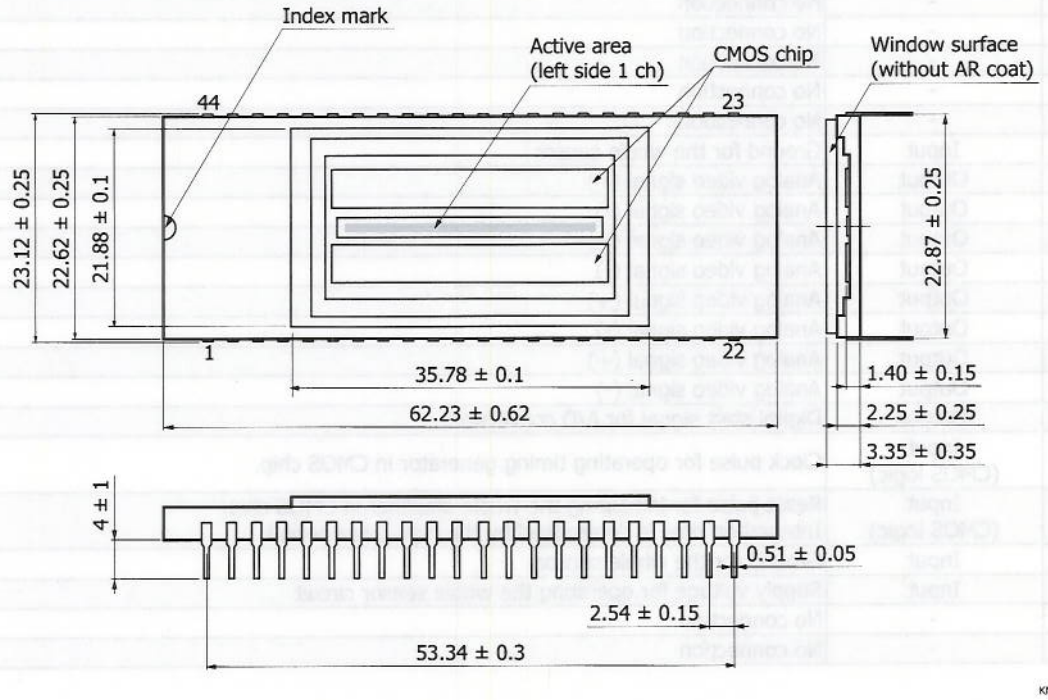

Pin connections

Pin No.	Pin connection	Input/output	Function and recommended connection
1	NC	-	No connection
2	Cfa	Input	Signal for selecting the conversion efficiency in the CMOS chip
3	Cfb		
4	Cfc		
5	RESET_EVEN	Input (CMOS logic)	Reset pulse for initializing the whole amplifier in CMOS chip. Integration time is determined by the high pulse period.
6	CLK_EVEN	Input (CMOS logic)	Clock pulse for operating timing generator in CMOS chip.
7	AD_ST_EVEN	Output	Digital start signal for A/D convertion
8	Vout-2	Output	Analog video signal (-)
9	Vout+2	Output	Analog video signal (+)
10	Vout-4	Output	Analog video signal (-)
11	Vout+4	Output	Analog video signal (+)
12	Vout-6	Output	Analog video signal (-)
13	Vout+6	Output	Analog video signal (+)
14	Vout-8	Output	Analog video signal (-)
15	Vout+8	Output	Analog video signal (+)
16	Vss	Input	Ground for the whole sensor
17	NC	-	No connection
18	NC	-	No connection
19	Vref3	Input	Supply voltage for operating the signal processing circuit in the CMOS chip
20	Vref2		
21	Vref1		
22	NC	-	No connection
23	INP	Input	Reset voltage for the charge amplifier array in the CMOS chip
24	NC	-	No connection
25	NC	-	No connection
26	NC	-	No connection
27	NC	-	No connection
28	NC	-	No connection
29	Vss	Input	Ground for the whole sensor
30	Vout+7	Output	Analog video signal (+)
31	Vout-7	Output	Analog video signal (-)
32	Vout+5	Output	Analog video signal (+)
33	Vout-5	Output	Analog video signal (-)
34	Vout+3	Output	Analog video signal (+)
35	Vout-3	Output	Analog video signal (-)
36	Vout+1	Output	Analog video signal (+)
37	Vout-1	Output	Analog video signal (-)
38	AD_ST_ODD	Output	Digital start signal for A/D conversion
39	CLK_ODD	Input (CMOS logic)	Clock pulse for operating timing generator in CMOS chip.
40	RESET_ODD	Input (CMOS logic)	Reset pulse for initializing the whole amplifier in CMOS chip. Integration time is determined by the high pulse period.
41	Vss	Input	Ground for the whole sensor
42	Vdd	Input	Supply voltage for operating the whole sensor circuit
43	NC	-	No connection
44	NC	-	No connection

Multichannel detector head C10854 (sold separately)

The C10854 is a multichannel detector head suitable for applications where high-speed infrared imaging is required, such as sorting machines and SD-OCT (spectral domain-optical coherence tomography). The HAMAMATSU G10768 series InGaAs near-infrared linear image sensor (sold separately) can be easily installed in the C10854.
The C10854 comes with application software that runs on Windows 2000 or XP and is specifically programmed to operate the C10854 from the PC. The application software also includes a function library exclusively for the C10854, allowing you to develop your own software more efficiently.

Features

- **High-speed operation: 5 MHz**
- **Line rate: 31.25 kHz**
- **1024 pixels (128 pixels × 8 ports)**
- **CameraLink**

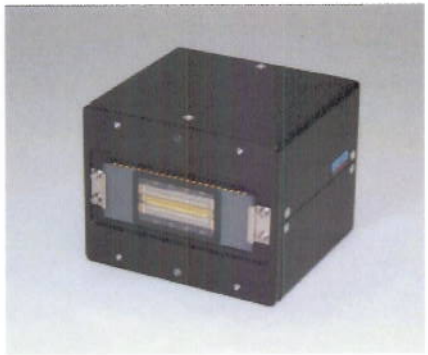

Information described in this material is current as of February, 2011. Product specifications are subject to change without prior notice due to improvements or other reasons. Before assembly into final products, please contact us for the delivery specification sheet to check the latest information.
Type numbers of products listed in the delivery specification sheets or supplied as samples may have a suffix "(X)" which means preliminary specifications or a suffix "(Z)" which means developmental specifications.
The product warranty is valid for one year after delivery and is limited to product repair or replacement for defects discovered and reported to us within that one year period. However, even if within the warranty period we accept absolutely no liability for any loss caused by natural disasters or improper product use.
Copying or reprinting the contents described in this material in whole or in part is prohibited without our prior permission.

HAMAMATSU

www.hamamatsu.com

HAMAMATSU PHOTONICS K.K., Solid State Division
1126-1 Ichino-cho, Higashi-ku, Hamamatsu City, 435-8558 Japan, Telephone: (81) 53-434-3311, Fax: (81) 53-434-5184
U.S.A.: Hamamatsu Corporation: 360 Foothill Road, P.O.Box 6910, Bridgewater, N.J. 08807-0910, U.S.A., Telephone: (1) 908-231-0960, Fax: (1) 908-231-1218
Germany: Hamamatsu Photonics Deutschland GmbH: Arzbergerstr. 10, D-82211 Herrsching am Ammersee, Germany, Telephone: (49) 8152-375-0, Fax: (49) 8152-265-8
France: Hamamatsu Photonics France S.A.R.L.: 19, Rue du Saule Trapu, Parc du Moulin de Massy, 91882 Massy Cedex, France, Telephone: 33-(1) 69 53 71 00, Fax: 33-(1) 69 53 71 10
United Kingdom: Hamamatsu Photonics UK Limited: 2 Howard Court, 10 Tewin Road, Welwyn Garden City, Hertfordshire AL7 1BW, United Kingdom, Telephone: (44) 1707-294888, Fax: (44) 1707-325777
North Europe: Hamamatsu Photonics Norden AB: Smidesvägen 12, SE-171 41 Solna, Sweden, Telephone: (46) 8-509-031-00, Fax: (46) 8-509-031-01
Italy: Hamamatsu Photonics Italia S.R.L.: Strada della Moia, 1 int. 6, 20020 Arese, (Milano), Italy, Telephone: (39) 02-935-81-733, Fax: (39) 02-935-81-741

Cat. No. KMIR1015E07 Feb. 2011 DN

IRRADIANCE
GLASS

Comments for proposed rules **Category 6** of CCL
on sections applicable to IRradiance Glass, Inc (IRG)

Prepared by: Jennifer McKinley, COO, IRradiance Glass
mckinley@irradianceglass.com
321-250-8200 x200

Category 6 Comments

1. **Direct comparison of non-military products with CCL entries**

Compare 6A615.c (1-4) "optics blanks" (flat or initially curved, with dimension restrictions) for Ge, ZnS, ZnSe, and chalcogenide glass with 6C004.a ZnS and ZnSe "substrate blanks."

The term "optics blanks" in 6A615.c seems to refer to specific ground (polished?) blanks that are precursors to machined parts previously on the USML. ***It is not clear whether this term "optics blanks" would apply to raw material as-melted, as-grown "boules" or "rods" or "substrate blanks" with the dimensions detailed in this proposed change.*** *For IRradiance Glass, which produces chalcogenide glass in diameters greater than 76mm (3 inches) in thicknesses greater than 38.1mm (1.5") in* ***as-melted form****, it would make export license exemptions and controls* ***unclear*** *for the glass in as-melted form.*

Should the chalcogenide glass "as-melted, glass-in-the-mass" (harmonized code: 7001.00.20) be controlled instead under ECCN 6C004 (which would allow an STA exemption)? *Note that it should also match other optical materials listed on the Wassenaar list (6A4b and 6C4a), which is derived from 6C004.*

Domestic and International suppliers of this material include SCHOTT North America, VITRON Germany, and Umicore (U.S. and Germany). All of these companies produce this material in advertised "blank" form in diameters up to 190mm in thicknesses greater than the dimension restrictions in 6A615.c. (see screen capture images and product information sheets below)

It is understood that "600 series" trumps other ECCNs, but the ***dimension restrictions on ZnS and ZnSe in 6C004 are more restrictive for thickness dimensions. These two ECCNs should be simplified and unified.***

2. **Assessment of the appropriateness of the parameters and thresholds chosen to designate CCL items**

Agree that chalcogenide glass that is a blank for a specific part of large sizes should be on "600 series", but term "optics blank" should be clarified, and infrared materials controls and exemptions unified across CCL and Wassenaar list.

3. **Assessment of the overall scope of controls on the CCL**

Comments and suggested changes for Category 6 revisions applicable to IRG place "higher walls around fewer items" (clearly define terms used in ECCN "600 series"), "enhance industrial base (allow for export of large diameter as-melted glass with STA exemption), and "has clear, straightforward guidelines" (clearly define terms used).

4. **Address whether the proposed rules, in total, creates an environment in which US companies can successfully compete**

See comments above for available domestic and international providers for chalcogenide glass. ***It is possible that if a domestic or international company would like to buy large diameter and thickness as-melted glass, they may choose a country with fewer export/import restrictions on dimensions of the item.***

5. **Do the proposed rules follow the ECR guidelines?**

Comments and suggested changes for Category 6 revisions applicable to IRG place "higher walls around fewer items" (clearly define terms used in ECCN "600 series"), "enhance industrial base (allow for export of large diameter as-melted glass with STA exemption), and "has clear, straightforward guidelines" (clearly define terms used).

3267 PROGRESS DRIVE SUITE 109 ORLANDO, FL 32826
OFFICE: 321.250.8200 FAX: 855.258.3339

IRRADIANCE
GLASS

umicore

GASIR®1 - Infrared transmitting Glass

GASIR®1/1001

Physical Data & Typical Characteristics

Mechanical

Density	4,40(±0,01)x10^3	kg/m^3
Compression resistance	161	MPa
Young's modulus	17,89	GPa
Torsion modulus	6,98	GPa
Flexion resistance	17,2	MPa
Poisson's ratio	0.28	
Vickers hardness	170	HV

Thermal

Glass temperature	565	K
Upper use temperature	523	K
Specific heat	0,36	$J.g^{-1}.K^{-1}$
Thermal expansion coefficient (300K)	17 x 10^{-6}	K^{-1}
Thermal conductivity (288 – 307K)	0,28	W/m.K
Heat Capacity	0,36	$J.g^{-1}.K^{-1}$
Dielectric constant	> 20 MΩ (insulant)	

Optical

Refractive index n (293K)	λ (µm)	Refractive Index
	1,54	2,5424
	2	2,5267
	3	2,5148
	3.5	2,5120
	4	2,5100
	4.5	2,5085
	5	2,5071
	6	2,5047
	7	2,5024
	8	2,4999
	9	2,4973
	10	2,4944
	11	2,4911
	12	2,4874
	13	2,4834
	14	2,4787

Temperature coefficient of refractive index dn/dt @ 293 K

λ (µm) = 1.06 µm	8,4 x 10^{-5} K^{-1} (@ 293 K)	10.1 x 10^{-5} K^{-1} (@t 373 K)
λ (µm) = 10.66 µm	5,5 x 10^{-5} K^{-1} (@ 293 K)	6,7 x 10^{-5} K^{-1} (@t 373 K)
Refractive index variation between different lots		< 6 x 10^{-4}

Umicore Electro-Optic Materials is ISO certified: ISO 9001 & ISO 14001

Umicore
Electro-Optic Materials
Watertorenstraat 33,
B – 2250 Olen,
BELGIUM

Tel +32-14 24 57 00
Fax +32-14 24 55 34

optics@umicore.com
www.optics.umicore.com

3267 PROGRESS DRIVE SUITE 109 ORLANDO, FL 32826
OFFICE: 321.250.8200 FAX: 855.258.3339

IRRADIANCE
GLASS

umicore

Transmission

λ (µm)	Transmision %	Absorption coefficient (cm^{-1})
0.8	59	
1	65	
1,3	67,7	
1,54	68,4	
2	68,5	
3	68,5	0,005 – 0,0095
4	68,5	0,006 – 0,008
5	68,5	0,03 – 0,035
6	68,5	< 0,001
7	68,5	< 0,001
8	68,5	0,002 – 0,006
9	68,5	0,003 – 0,005
10	68,5	0,007 – 0,009
11	68,5	0,03 – 0,035
12	66,0	0,14 – 0,2
13	64,0	0,3 – 0,4
14	64,0	

Uncoated plano disc polished both side, thickness 2.0 mm, double beam IR spectrometer Perkin Elmer 882, air reference method, slit dimension: diameter 8 mm

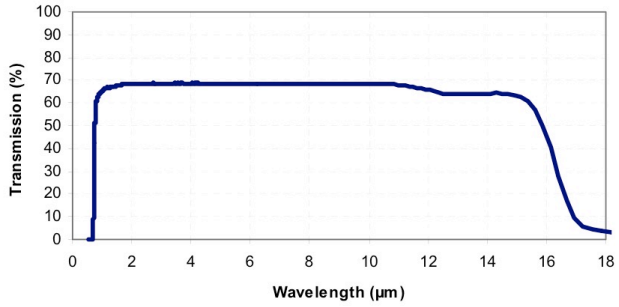

Formats

Disks, blanks

Moulded spherical, aspherical and diffractive lenses

For coating options, please consult our data sheets on www.optics.umicore.com

Sizes

Diameters up to 190 mm

Additional Information

Special demands outside the scope of above-mentioned specifications and limits upon request

Umicore Electro-Optic Materials is ISO certified: ISO 9001 & ISO 14001

Umicore
Electro-Optic Materials
Watertorenstraat 33,
B – 2250 Olen,
BELGIUM

Tel +32-14 24 57 00
Fax +32-14 24 55 34

optics@umicore.com
www.optics.umicore.com

VITRON

IR GLASSES
- SUMMARY
- QUALITY
- FORMS OF DELIVERIES
- SPECIFICATIONS
- APPLICATIONS

CVD ZINC SULFIDE

GLASS CERAMICS

SPECIAL GLASS MELTS

VITRON - Your Specialist for Infrared Materials

Infrared Transmissive Chalcogenide Glass

Delivery Types of Infrared Glasses

You can order our chalcogenide infrared glasses in different forms:

Optical components (standard quality) or, according to your specification, as:

- infrared windows, IR domes and prisms
- IR lenses with a spherical and/or aspherical surface
- with or without AR coating
- infrared optical systems

Cut to size blanks:

Round discs	min. Ø 7.0 mm bis max. Ø 140 mm
Rectangulars	min. Ø 7.0 mm bis max. Ø 100 mm
	min. Ø 1.0 mm bis max. Ø 50 mm
Lens blanks	min. Ø 7.0 mm bis max. Ø 120 mm

Blanks according to measurement specifications:
Ø bis 100mm x 150mm

Quantities:
from individual items to medium quantities

5207 PROGRESS DRIVE SUITE 109 ORLANDO, FL 32826
OFFICE: 321.250.8200 FAX: 855.258.3339

Advanced Optics Home
Products
Optical Components
Optical Filters
Optical Materials
IR-Materials
Infrared Ceramic
Infrared Chalcogenide Glasses
Sapphire
Optical Glass
Special Materials
Thin Glass
ZERODUR® Extremely Low Expansion Glass Ceramic
Wafers & Thin Glass
ZERODUR® Extremely Low Expansion Glass Ceramic
Architecture
Applications
Knowledge Center
Downloads
About Advanced Optics

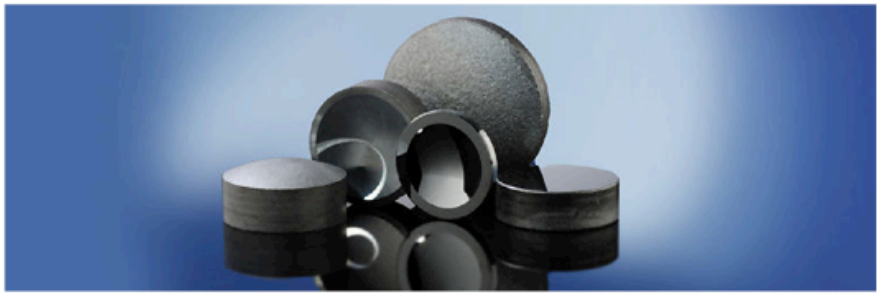

Infrared Chalcogenide Glasses

Product Information | Advantages | Applications | Supply Forms | Technical Details | Downloads

Infrared chalcogenide glasses are available as:

Supply Forms	Thicknesses	Dimensions
Typical forms of supply will depend on customer's requirements	up to 150 mm	diameter: up to 100 mm
Offering of polished blanks for sample parts	5 mm up to 30 mm	diameter: 10 mm up to 100 mm

Slideshare Newsletter Events Downloads Contact

© 2015 SCHOTT North America, Inc. | Legal | Help

5207 PROGRESS DRIVE SUITE 109 ORLANDO, FL 32826
OFFICE: 321.250.8200 FAX: 855.258.3339

#2

PUBLIC SUBMISSION

As of: 6/25/15 1:55 PM
Received: May 27, 2015
Status: Pending_Post
Tracking No. 1jz-8j36-xhd8
Comments Due: July 06, 2015
Submission Type: Web

Docket: BIS-2015-0016
Revisions to the Export Administration Regulations (EAR): Control of Fire Control, Range Finder, Optical, and Guidance and Control Equipment the President Determines No Longer Warrant Control Under the United States Munitions List (USML)

Comment On: BIS-2015-0016-0001
Export Administration Regulations: Control of Fire Control, Range Finder, Optical, and Guidance and Control Equipment that No Longer Warrant Control under the U.S. Munitions List

Document: BIS-2015-0016-DRAFT-0002
Comment on FR Doc # 2015-10353

Submitter Information

Name: Matthew Lancaster

General Comment

See attached file(s)

Attachments

Comments re CCL 6 (27 May 2015) - FINAL

May 27, 2015

Regulatory and Policy Division
Bureau of Industry and Security
U.S. Department of Commerce
14th Street and Pennsylvania Avenue, NW
Room 2099B
Washington, D.C. 20230

Reference: RIN 0694-AF75

Attachments: A) Comments of Matthew J. Lancaster to DDTC In the Matter of Proposed Rule – Amendment to the International Traffic in Arms Regulations: Revision of U.S. Munitions List Category XII (RIN 1400-AD32; Public Notice 9110), including Exhibit 1

Dear Sir or Madam:

Attached please find my comments to DDTC's proposed amendment to Category XII of the United States Munitions List (USML).

Of particular interest to BIS in the framework of the matter to which this letter refers may be my comments pertaining to the transfer to the EAR of technology for EAR-controlled items in "foreign military commodities" (which I perceive to mean items controlled under ECCN 0A919), which begin at Line 103 (Page 16 of 28).

Sincerely,

Matthew J. Lancaster

Matthew J. Lancaster
Private Citizen

BEFORE THE

Department of State

Washington, DC

In the Matter of Proposed Rule Amendment to the International Traffic in Arms Regulations: Revision of U.S. Munitions List Category XII	RIN 1400-AD32 Public Notice 9110

To: Directorate, Defense Trade Controls, Department of State (DDTC)

COMMENTS OF MATTHEW J. LANCASTER

Introduction

1. These observations relate to the proposed control of technical data, defense services, software, and technology under proposed revisions to United States Munitions List (USML) Category XII – Fire Control, Range Finder, Optical and Guidance and Control Equipment (hereinafter "USML Cat. XII").

2. This set of comments first probes the potential forward and reverse implications of USML Cat. XII(f); then recommends some alternative language to obtain the assumed goal.

BACKGROUND

The Asterisk

3. USML Cat. XII(f), upon initial inspection, appears to resemble most of its counterparts in other USML categories having already undergone complete transformation to publication as part of the President's Export Control Reform initiative (ECR):

> ***(f) Technical data (as defined in § 120.10 of this subchapter) and defense services (as defined in § 120.9 of this subchapter) directly related to the defense articles enumerated in paragraphs (a) through (e) of this category. (See § 125.4 of this subchapter for exemptions.) (MT for technical data and defense services related to articles designated as such.)**

4. In fact, I read this paragraph more than a half dozen times before realizing it myself for the first time that USML Cat. XII(f) opens with an asterisk (*).

5. ITAR § 121.1(b)(3) notes:
> ***Significant military equipment.*** **An asterisk may precede an entry in a U.S. Munitions List category. The asterisk means the enumerated defense article is deemed to be "Significant Military Equipment" to the extent specified in §120.7 of this subchapter. Note that technical data directly related to the manufacture or production of any defense articles enumerated in any category designated as Significant Military Equipment (SME) is also designated as SME.**
> [italics in original].

6. Does DDTC intend for all technical data (to include software) and defense services classifying under USML Cat. XII(f) to be treated as SME?

7. If so, USML Cat. XII(f) will be almost singularly unique among its counterparts.

8. USML Cat. XII(f), if SME, would also be unique in that neither USML Cat. XII(d) nor USML Cat. XII(e) contain any SME, which would mean that technical data (to include software) and defense services for such non-SME hardware would itself be SME.

9. As a side note, it is also interesting that USML Cat. XII(e)(15), which appears to capture certain classified hardware, is not designated SME.

10. I could find no other similar entry on the USML which is not designated SME.

11. My interest was dually piqued upon reading Note to paragraph (e), which would appear to make such USML Cat. XII classified hardware "subject to the EAR when, prior

to export, reexport, retransfer, or temporary import, they are integrated into and included as an integral part of an item subject to the EAR, and cannot be removed without destruction or damage to the article or render the item inoperable."

12. But back to my initial point, I believe that USML Cat. XII(f) has been designated SME in error, but wish to draw DDTC attention to the supposed mistake in order to rectify it prior to publication.

Are the Reverse Implications for the Phrase "directly related to" Intended and Correct?

13. Note 1 to paragraph (f) under USML Cat. XII(f) states:
Technical data and defense services directly related to image intensifier tubes [(IITs)] and specially designed parts and components therefor controlled in paragraph (c)(1) of this category, infrared focal plane arrays (IRFPAs) and detector elements therefor controlled in paragraph (c)(2) of this category, integrated IRFPA dewar cooler assemblies (IDCAs) controlled in paragraph (c)(9) of this category, wafers incorporating IRFPA or ROIC structures controlled in paragraph (e)(3) of this category, and specially designed readout integrated circuits (ROICs) controlled in paragraphs (e)(4) and (5) of this category, remain subject to the ITAR even if the technical data or defense services could also apply to items subject to the EAR.
[emphasis added].

14. In sum, Note 1 to paragraph (f) says that "technical data [(to include software)] and defense services directly related to [certain defense articles] remain subject to the ITAR even if the technical data or defense services could also apply to items subject to the EAR."

15. The reverse implication of Note 1 to paragraph (f) is that technical data (to include software) and defense services directly related to all other USML Cat. XII defense articles do not remain subject to the ITAR if (especially if?!) the technical data (to include software) or defense services could also apply to items subject to the EAR.

16. Furthermore, the reverse implication of Note 1 to paragraph (f) is that technical data (to include software) and defense services directly related to all other USML defense articles – across the board – do not remain subject to the ITAR if the technical

data (to include software) or defense services could also apply to items subject to the EAR.

17. In sum, a possible reading of Note 1 to paragraph (f) is that a hidden definition for the phrase "directly related to" exists in the reverse implication of Note 1 to paragraph (f), which is that with respect to technical data (to include software) and defense services, if it could also apply to items subject to the EAR, it does not remain subject to the ITAR.

18. While the reverse implication of Note 1 to paragraph (f), with its hidden definition for the phrase "directly related to", would bring much-needed clarity and simplicity to the ITAR, it would also transform the phrase "directly related to" into a more liberal release mechanism than that embodied by the definition of the phrase "specially designed" at ITAR § 120.41, and I find it difficult to believe, without more, that DDTC intended this result to issue by virtue of USML Cat. XII.

19. Did DDTC write Note 1 to paragraph (f) with the intention that a reverse implication should be drawn from Note 1 to paragraph (f) and applied to the rest of the USML with respect to the intersection of the phrase "directly related to" with technical data (to include software) and defense services?

20. If not, did DDTC write Note 1 to paragraph (f) with the intention that a reverse implication should be drawn from Note 1 to paragraph (f) and applied to the rest of USML Cat. XII with respect to the intersection of the phrase "directly related to" with technical data (to include software) and defense services?

21. If not, why did DDTC write Note 1 to paragraph (f)?

22. Some, including me, have repeatedly urged DDTC to distinguish the application of the term "directly related to" from the definition of "specially designed"; USML Cat. XII demands it.

23. Rather than navigate the issue via promulgation of a labyrinth of notes (each subject to interpretation), I recommend that DDTC deals with the issue more directly.

24. With the exception of revised USML Category IX, DDTC appears to be hesitant to dismantle the old structure for the catch-all listing for technical data and defense services in each USML category.

25. I recommend DDTC shuffle off this stifling coil so that clarity can be brought to the type of control I believe DDTC envisioned in writing Note 1 to paragraph (f).

26. My recommendation is to integrate Note 1 to paragraph (f) into USML Cat. XII(f) as follows:

> (f)(1) Technical data (as defined in § 120.10 of this subchapter) **specially designed for** and defense services (as defined in § 120.9 of this subchapter) directly related to the defense articles enumerated in paragraphs (a) through (e) of this category. (See § 125.4 of this subchapter for exemptions.) (MT for technical data and defense services related to articles designated as such.)
>
> **(2) Technical data (as defined in § 120.10 of this subchapter) directly related to the defense articles enumerated in paragraphs (c)(1), (c)(2), (c)(9) or (e)(3)-(5) of this category. (See § 125.4 of this subchapter for exemptions.) (MT for technical data and defense services related to articles designated as such.)**

<u>Are the Reverse Implications for "Software" Intended and Correct?</u>

27. Note 2 to paragraph (f) under USML Cat. XII(f) begins:
Software and technical data include:

28. ITAR § 120.10(a)(4) defines technical data to include software, as defined at ITAR § 120.45(f), directly related to defense articles.

29. By listing software and technical data separately in the opening of Note 2 to paragraph (f), DDTC appears to ignore that the ITAR definition of technical data includes software.

30. By ignoring that the ITAR definition of technical data includes software in the opening of Note 2 to paragraph (f), DDTC appears to be making a unique distinction.

31. The reverse implication of the unique distinction is that, with respect to USML Cat. XII(f), technical data does not include software.

32. As noted in Line 3., above, USML Cat. XII(f) appears to resemble most of its counterparts in other USML categories having already undergone complete transformation to publication as part of ECR.

33. As such, the reverse implication of the unique distinction for software versus technical data made in the opening of Note 2 to paragraph (f) could be extended to all other post-ECR USML categories.

34. Did DDTC write the opening to Note 2 to paragraph (f) with the intention that a reverse implication should be drawn from the opening of Note 2 to paragraph (f) and applied to the post-ECR USML with respect to software being excluded from consideration when the term "technical data" is used on its own?

35. If not, did DDTC write the opening to Note 2 to paragraph (f) with the intention that a reverse implication should be drawn from the opening of Note 2 to paragraph (f) and applied to the rest of USML Cat. XII with respect to software being excluded from consideration when the term "technical data" is used on its own?

36. If not, why did DDTC separately call out software from technical data in the opening to Note 2 to paragraph (f)?

37. For reasons described in greater detail below, my ultimate recommendation is to strike the opening to Note 2 to paragraph (f); however, if the opening to Note 2 to paragraph (f) is retained, my recommendation would be to modify in one of two ways.

38. Either:
Software and **other** technical data include:

39. Or:
~~Software and t~~Technical data includes:

Are the Reverse Implications for "Technical Data" Intended and Correct?

40. Paragraph A of Note 2 to paragraph (f) states that technical data includes: **Design or manufacturing process descriptions (e.g., steps, sequences, conditions, parameters) for lasers described in paragraphs (b)(6) and (b)(9) through (13) of this category, IITs controlled in paragraph (c)(1) of this category and their parts and components controlled in paragraph (e)(2) of this category (including tube sealing techniques, interface techniques within the vacuum space for photocathodes, microchannel plates, phosphor screens, input glass-window faceplates, input or output fiber optics (e.g., inverter)), IRFPAs and detector elements therefor controlled in paragraph (c)(2) of this category, integrated IRFPA dewar cooler assemblies (IDCAs) controlled in paragraph (c)(9) of this category, wafers incorporating structures for an IRFPA and detector elements therefor controlled in paragraph (c)(2) or structures for ROICs controlled in paragraph (e)(4) or (5) of this category, and specially designed ROICs controlled in paragraphs (e)(4) and (5) of this category (including bonding or mating (e.g., hybridization of IRFPA detectors and ROICs), prediction or optimization of IRFPAs or ROICs at cryogenic temperatures, junction formation, passivation).**

41. In sum, paragraph A of Note 2 to paragraph (f) states that technical data includes "design or manufacturing process descriptions (e.g., steps, sequences, conditions, parameters) for [certain defense articles]."

42. The reverse implication of paragraph A to Note 2 to paragraph (f) is that DDTC does not perceive design or manufacturing process descriptions to fall within the definition of technical data at ITAR § 120.10.

43. ITAR § 120.10(a)(1) defines technical data to include: **Information... which is required for the design, development, production, manufacture, assembly, operation, repair, testing, maintenance or modification of defense articles.**

44. Did DDTC write paragraph A of Note 2 to paragraph (f) with the perspective that design or manufacturing process descriptions do not fall within the definition of technical data at ITAR § 120.10?

45. If not, why did DDTC write paragraph A of Note 2 to paragraph (f)?

46. I do not believe DDTC wrote paragraph A of Note 2 to paragraph (f) intending to imply that, generally, design or manufacturing process descriptions fall outside the ITAR definition of technical data.

47. Rather, I believe DDTC was trying to, for the most part, fashion a carve-out to a carve-out, which became muddy in the multiple draft iterations of USML Cat. XII which were likely to have been circulated internally prior to the publication of this Proposed Rule.

48. As such, and for additional reasons described in greater detail below, my recommendation is to incorporate this carve-out to a carve-out into the definition of technical data in ITAR § 120.10.

49. Also, Note to paragraph A of Note 2 to paragraph (f) states:
Technical data does not include information directly related to basic operating instructions, testing results, incorporating or integrating IRFPAs into higher level [sic] packaged assemblies not enumerated in this category, or external interface control documentation associated with such assemblies or assemblies subject to the EAR, provided such information does not include design methodology, engineering analysis, or manufacturing know-how for a USML controlled [sic] IRFPA.

50. In partial summary, Note to paragraph A of Note 2 to paragraph (f) states that, insofar as no information on design methodology, engineering analysis, or manufacturing know-how for a USML-controlled IRFPA (hereinafter collectively referred to as "DEM4IRFPA") is involved, information directly related to incorporating or integrating IRFPAs into higher-level packaged assemblies not enumerated in USML Cat. XII is not ITAR-controlled.

51. A reverse implication of Note to paragraph A of Note 2 to paragraph (f) is that information directly related to incorporating or integrating IRFPAs into higher-level packaged assemblies enumerated in other USML categories is not ITAR-controlled.

52. Did DDTC write paragraph A of Note 2 to paragraph (f) intending to imply that information directly related to incorporating or integrating IRFPAs into higher-level packaged assemblies enumerated in other USML categories is not ITAR-controlled?

53. I believe DDTC did write paragraph A of Note 2 to paragraph (f) intending to imply that information directly related to incorporating or integrating IRFPAs into higher-level packaged assemblies enumerated in other USML categories is not ITAR-controlled.

54. I also believe DDTC did not go far enough in its exclusion.

55. The exclusion only takes into account incorporation and integration activities, and neglects to address lifecycle support for such products.

56. As such, and for additional reasons described in greater detail below, my recommendation is to incorporate an expanded notion of this carve-out into the definition of technical data in ITAR § 120.10.

57. Also in partial summary, Note to paragraph A of Note 2 to paragraph (f) also states that, insofar as no DEM4IRFPA is involved, external interface control documentation (ICD) associated with non-USML-Cat.-XII, yet USML-enumerated, higher-level packaged assemblies incorporating or integrating IRFPAs is not ITAR-controlled technical data.

58. A reverse implication of Note to paragraph A of Note 2 to paragraph (f) is that external ICD associated with higher-level packaged assemblies incorporating or integrating IRFPAs enumerated in other USML categories is not ITAR-controlled.

59. Did DDTC write paragraph A of Note 2 to paragraph (f) intending to imply that external ICD associated with higher-level packaged assemblies incorporating or integrating IRFPAs enumerated in other USML categories is not ITAR-controlled?

60. I believe DDTC did write paragraph A of Note 2 to paragraph (f) intending to imply that external ICD associated with higher-level packaged assemblies incorporating or integrating IRFPAs enumerated in other USML categories is not ITAR-controlled.

61. I also believe that this type of broad carve-out is not best represented by being buried in a note to a single USML category.

62. As such, and for additional reasons described in greater detail below, my recommendation is to incorporate this carve-out into the definition of technical data in ITAR § 120.10.

63. Also in partial summary, Note to paragraph A of Note 2 to paragraph (f) also states that, insofar as no DEM4IRFPA is involved, external ICD associated with assemblies subject to the EAR is not ITAR-controlled.

64. A reverse implication of Note to paragraph A of Note 2 to paragraph (f) is that external ICD associated with EAR-controlled assemblies contains or constitutes information that a reasonable person might construe to be ITAR-controlled technical data, and that, regardless, such external ICD containing or constituting ITAR-controlled technical data is not ITAR-controlled.

65. Did DDTC write paragraph A of Note 2 to paragraph (f) intending to imply that external ICD associated with EAR-controlled assemblies generally contains or constitutes ITAR-controlled technical data, and, furthermore, that, regardless of whether such external ICD contains or constitutes ITAR-controlled technical data, it is not ITAR-controlled?

66. If so, should such a significant proclamation impacting the ITAR definition of technical data appear in a paragraph to a note in a single USML category?

67. This is where the verbiage begins to become incredibly confusing for me.

68. Why do we need a statement in the USML that external ICD for EAR-controlled assemblies is not ITAR-controlled?

69. I believe we do not.

70. As such, my recommendation is to strike this verbiage.

71. Also in partial summary, Note to paragraph A of Note 2 to paragraph (f) also states that, insofar as no DEM4IRFPA is involved, all information related to basic operating instructions and testing results is not ITAR-controlled technical data.

72. Did DDTC write paragraph A of Note 2 to paragraph (f) intending to imply that all information related to basic operating instructions and testing results is not ITAR-controlled technical data?

73. If so, should such a significant proclamation impacting the ITAR definition of technical data appear in a paragraph to a note in a single USML category?

74. I do not believe DDTC intends to imply that all information related to basic operating instructions and testing results is not ITAR-controlled technical data.

75. Rather, I believe that DDTC intended to exclude from the ITAR definition of technical data basic operating instructions and testing results for IFRPAs in higher-level packaged assemblies not enumerated in USML Cat. XII.

76. I believe this exclusion is achieved by incorporating the entire lifecycle of the product into a slightly broader exclusion, which I prefer to capture in the definition of technical data in ITAR § 120.10.

77. As such, my recommendation is to combine paragraph A to Note 2 to paragraph (f) and Note to paragraph A of Note 2 to paragraph (f) into slightly expanded verbiage in the definition of technical data in ITAR § 120.10, as follows:

> (a) Technical data means, for purposes of this subchapter:
>
> (1) Information, other than software as defined in §120.10(a)(4), which is required for the design, development, production, manufacture, assembly, operation, repair, testing, maintenance or modification of defense articles. This includes information in the form of blueprints, drawings, photographs, plans, instructions or documentation.
>
> ...
>
> (b) The definition in paragraph (a) of this section does not include:
>
> ...

(4) provided such information does not include design methodology, engineering analysis, or manufacturing know-how for an infrared focal plane array (IRFPA) in Category XII of part 121 of this subchapter, information directly related to the entire lifecycle for:

(i) IRFPAs in higher-level packaged assemblies not in Category XII of part 121 of this subchapter; or

(ii) external interface control documentation for higher-level packaged assemblies not in Category XII of part 121 of this subchapter; or

(5) provided such information does not include design or manufacturing process descriptions (e.g., steps, sequences, conditions, parameters), information directly related to the entire lifecycle for:...

Are the Reverse Implications for Tune-up/Tone-down (TUTD) Software Intended and Correct?

78. Paragraph B of Note 2 to paragraph (f) states:
Software that converts an article controlled in this category into an item subject to the EAR or an item subject to the EAR into an article controlled in this category [(herein referred to as "tune-up/tone-down software" or "TUTD software")] is directly related to the defense article controlled in this category. When a defense article has been converted into an item subject to the EAR through [TUTD] software, the presence of the [TUTD] software that prevents the item from meeting or exceeding a USML control parameter does not make the item subject to the ITAR.

79. In sum, when TUTD software is involved with a USML Cat. XII defense article, the TUTD software is ITAR-controlled.

80. Also in sum, when TUTD software is used to tone-down a defense article to below ITAR control parameters, the former defense article becomes an EAR-controlled item, despite the continuing presence of TUTD software in the toned-down item.

81. The first sentence of paragraph B to Note 2 to paragraph (f) calls out "this category" three (3) times, but the second sentence of paragraph B to Note 2 to paragraph (f) does not call out or reference USML Cat. XII at all.

82. As such, the reverse implication is that the second sentence of paragraph B to Note 2 to paragraph (f) applies to all of the USML.

83. Does DDTC intend for the second sentence of paragraph B of Note 2 to paragraph (f) to be applied as interpretive guidance for all other defense articles on the USML to which TUTD software has been applied?

84. If not, should DDTC reference USML Cat. XII in the second sentence of paragraph B of Note 2?

85. If so, should such a significant policy announcement (Reverse See-Through Rule) for all TUTD software appear in a paragraph to a note in a single USML category?

86. I very much like the idea of a Reverse See-Through Rule for all TUTD software.

87. It is my recommendation that such a proclamation, if intended, be more prominently displayed.

88. As such, as described further below, I recommend incorporation of this Reverse See-Through Rule into the ITAR definition of software at ITAR § 120.45(f).

89. I would additionally recommend establishing that either an existing exemption applies (e.g., ITAR § 125.4(b)(5)) or creating a new exemption for the maintenance (e.g., updates, bug fixes) of TUTD software in an EAR-controlled item.

90. Also, the reverse implication of the first sentence could be that TUTD software involved with defense articles in any other USML category is not "directly related to the defense article controlled in" any other category (i.e., that all other TUTD software is not ITAR-controlled).

91. Does DDTC intend for the first sentence of paragraph B of Note 2 to paragraph (f) to be construed to mean that TUTD software involved with defense articles in any other USML category is not ITAR-controlled?

92. If so, should such a significant proclamation impacting the ITAR definition of software (or technical data) appear in a paragraph to a note in a single USML category?

93 I do not believe DDTC intends to imply that TUTUD software involved with defense articles in any other USML category is not ITAR-controlled.

94. To the contrary, I believe DDTC is likely more inclined to adopt a default position that all TUTD software is, on its face, ITAR-controlled.

95. I also believe that this inclination is better captured in a more prominent display as part of the ITAR definition of software at ITAR § 120.45(f).

96. As such, I recommend that paragraph B of note 2 to paragraph (f) be incorporated into the ITAR definition of software at ITAR § 120.45(f), as follows:

> §120.45 End-items, components, accessories, attachments, parts, firmware, software, systems, and equipment.
>
> ...
>
> (f) Software includes but is not limited to the system functional design, logic flow, algorithms, application programs, operating systems, and support software for design, implementation, test, operation, diagnosis and repair. A person who intends to export only software should, unless it is specifically enumerated in §121.1 of this subchapter (e.g., USML Category XIII(b)), apply for a technical data license pursuant to part 125 of this subchapter. **Software that converts a defense article into an item described in the EAR or an item described in the EAR into a defense article is directly related to the defense article. When a defense article has been converted into an item described in the EAR through software, the presence of the software that prevents the item from meeting or exceeding a USML control parameter does not make the item subject to the ITAR.**

<u>Are the Reverse Implications for USML Category IX Intended and Correct?</u>

97. Paragraph C of Note 2 to paragraph (f) states:

> **EO/IR simulation or projection system software that replicates via simulation either the output data or information provided by any article controlled in this category, a radiometrically calibrated spectral signature**

of any article controlled in this subchapter, volumetric effects of plumes or military operational obscurants, or countermeasure effects.

98. USML Category IX, generally, covers military training equipment and training, and, more specifically, its lists include: targets having an infrared signature that mimics a specific defense article, other item, or person; infrared scene generators; certain simulators and; software and associated databases not elsewhere enumerated on the USML used to model or simulate certain trainers, battle management, military test scenarios/models, or effects of weapons enumerated on the USML.

99. The reverse implication of paragraph C of Note 2 to paragraph (f) is that, in order to avoid significant overlap, DDTC intends to significantly descope USML Category IX.

100. While in the framework of ECR, generally, DDTC has committed to rewrite of USML Category XIII(a) commensurate with the final issuance of USML Cat. XII, the overall impact of the final issuance of USML Cat. XII to the rest of the USML is less well-advertised.

101. Does DDTC intend to significantly descope USML Category IX at the time of final issuance of USML Cat. XII in order to reconcile the significant overlap brought about by paragraph C of Note 2 to paragraph (f)?

102. My recommendation is to migrate the substance of paragraph C of Note 2 to paragraph (f) to USML Category IX, as follows:

Category IX—Military Training Equipment and Training

...

(b) Simulators, as follows:

...

(2) ~~(3)~~ [Reserved]

(3) EO/IR simulation or projection system software and associated databases that replicate via simulation:

(i) the output data or information provided by any article controlled in USML Category XII;

(ii) a radiometrically calibrated spectral signature of any article controlled in this subchapter; or

(iii) volumetric effects of plumes or military operational obscurants or countermeasure effects; or

...

(e) Technical data (see §120.10 of this subchapter) and defense services (see §120.9 of this subchapter):

...

(2) Directly related to the software and associated databases enumerated in paragraphs **(b)(3) and** (b)(4) of this category even if no defense articles are used or transferred; or

Are the Reverse Implications for "Defense Services" and "Software" Intended and Correct?

103. Note 3 to paragraph (f) states:
Technology for incorporating or integrating IRFPAs into permanent encapsulated sensor assemblies subject to the EAR, or integrating such assemblies into an item subject to the EAR, and integrating IITs into an item subject to the EAR, including integrating items subject to the EAR into foreign military commodities outside the United States, is subject to the EAR.

104. The ITAR does not define "technology" in ITAR § 120.10.

105. "Technology" is defined in Part 772 of the EAR as:
Specific information necessary for the "development", "production", or "use" of a product. The information takes the form of "technical data" or "technical assistance". Controlled "technology" is defined in the General Technology Note and in the Commerce Control List (Supplement No. 1 to part 774 of the EAR). "Technology" also is specific information necessary for any of the following: operation, installation (including on-site installation), maintenance (checking), repair, overhaul, refurbishing, or other terms specified in ECCNs on the CCL that control "technology."

N.B.: Technical assistance--May take forms such as instruction, skills training, working knowledge, consulting services.

NOTE 1: "Technical assistance" may involve transfer of "technical data".

NOTE 2: "Technology" not elsewhere specified on the CCL is designated as EAR99, unless the "technology" is subject to the exclusive jurisdiction of another U.S. Government agency (see § 734.3(b)(1)) or is otherwise not

> ***subject to the EAR (see § 734.4(b)(2)*** **[sic]** ***and (b)(3) and §§ 734.7 through 734.11 of the EAR).***
> [italics in original].

106. The Bureau of Industry and Security, Department of Commerce (BIS) has stated that the "EAR does not control services" (see Exhibit 1).

107. The definition of "technology" in the EAR includes references to "technical assistance," and it is plausible that "technical assistance" under the EAR may be confused with providing a service (see ITAR § 120.9) under the ITAR, but the definitions of "technical assistance" in the EAR and "defense service" in the ITAR are not aligned.

108. Under the EAR, it is important to recognize that "technical assistance," according to the EAR definition of "technology," is a form of information (the second sentence of the EAR's definition of "technology is: "**The information takes the form of 'technical data' or 'technical assistance'**").

109. "Technical data" is defined in Part 772 of the EAR as certain types of information, as follows:

> **May take forms such as blueprints, plans, diagrams, models, formulae, tables, engineering designs and specifications, manuals and instructions written or recorded on other media or devices such as disk, tape, read-only memories.**

110. But the EAR definition of "technical data" does not necessarily encompass all forms of EAR-controlled information.

111. EAR-controlled information may extend beyond the EAR definition of "technical data" to all information which is not: 1) either subject to the exclusive jurisdiction of another U.S. Government agency, or; 2) publicly available (see Part 772 of the EAR, Note 2 to the definition of "technology" and Part 734.3(b)(2) and (b)(3)).

112. As such, "technology" as defined in the EAR does not necessarily capture services which do not convey information, and the clarification from BIS states clearly that it does not.

113. On the other hand, the ITAR does not require furnishing of any information in order for a "defense service" to occur (see ITAR § 120.9(a)(1)).

114. It is also worth noting that the EAR definitions of "technology," "technical assistance," and "technical data" do not include software, whereas the ITAR definition of "technical data" (see ITAR § 120.10(a)(4)) includes software.

115. As such, by using the term "technology" in Note 3 to paragraph (f), and applying the definition of "technology" in the EAR (because the ITAR does not define "technology"), the reverse implication is that Note 3 to paragraph (f) does not exclude from ITAR jurisdiction pure services or software.

116. By using the term "technology" in Note 3 to paragraph (f), does DDTC intend to retain jurisdiction over pure services and software?

117. I do not believe DDTC intended to retain jurisdiction over pure services and software by virtue of its use of the term "technology" in Note 3 to paragraph (f).

118. In partial summary, Note 3 to paragraph (f) also states that technology **for integrating** permanent encapsulated sensor assemblies subject to the EAR into an item subject to the EAR is subject to the EAR.

119. To restate it in even simpler terms, it says that technology for integrating a certain EAR item into another certain EAR item is subject to the EAR.

120. A reverse implication is that technology for integrating other EAR items into other EAR items is subject to the ITAR.

121. Also, to provide contrast, Note 3 to paragraph (f) also states that technology **for incorporating or integrating** IRFPAs into permanent encapsulated sensor assemblies subject to the EAR is subject to the EAR.

122. Another reverse implication is that technology for **incorporating** permanent encapsulated sensor assemblies subject to the EAR into an item subject to the EAR is subject to the ITAR.

123. Did DDTC intend to imply that technology for integrating EAR items into EAR items is ever subject to the ITAR?

124. If not, why did DDTC include this provision in Note 3 to paragraph (f)?

125. I do not believe DDTC intended to imply this absurd result.

126. I also believe it is unnecessary to state in any note to any USML category that technology for integrating EAR items together is subject to the EAR.

127. Did DDTC intend to imply that technology for incorporating permanent encapsulated sensor assemblies subject to the EAR into an item subject to the EAR is subject to the ITAR?

128. If not, why did DDTC couch technology in terms of "incorporating or integrating" only with respect to IRFPAs going into permanent encapsulated sensor assemblies subject to the EAR?

129. Did DDTC intend to imply that all other activity related to having IRFPAs in permanent encapsulated sensor assemblies subject to the EAR, such as maintenance and repair, is subject to the ITAR?

130. If not, why did DDTC couch technology only in terms of "incorporating or integrating" as subject to the EAR?

131. I believe that DDTC has fallen victim to drafting carve-outs against the background of broad regulatory language.

132. As such, my recommendation is to broaden the language to encompass lifecycle support with respect to the products, as further described below.

133. Also in partial summary, Note 3 to paragraph (f) also states that integrating items subject to the EAR into foreign military commodities outside the US is subject to the EAR.

134. The ITAR does not define the terms "foreign military commodities" or "military commodity" in ITAR § 120.10.

135. The EAR defines the term "military commodity" in Part 772 of the EAR as:
An article, material, or supply that is described on the U.S. Munitions List (22 CFR Part 121) or on the Munitions List that is published by the Wassenaar Arrangement on Export Controls for Conventional Arms and Dual-Use Goods and Technologies, but does not include software, technology and any item listed in any ECCN for which the last three numerals are 018 or any item in the "600 series."

136. In the EAR's Commerce Control List (CCL) at Part 774, ECCN 0A919 describes EAR-controlled military commodities as military commodities produced and located outside the United States which are not subject to the ITAR, and which either: 1) incorporate certain cameras; 2) incorporate more than a certain amount of US-origin 600 series content, or; 3) are direct products of US-origin 600 series technology or software.

137. I believe it is fair to characterize ECCN 0A919 as describing "foreign military commodities."

138. ECCN 0A919 currently contains a Related Controls description which states:
(1) "Military commodities" are subject to the export licensing jurisdiction of the Department of State if they incorporate items that are subject to the International Traffic in Arms Regulations (ITAR) (22 CFR Parts 120 - 130). (2) "Military commodities" described in this paragraph are subject to the export licensing jurisdiction of the Department of State if such commodities are described on the U.S. Munitions List (22 CFR Part 121) and are in the United States. (3) The furnishing of assistance (including training) to foreign persons, whether in the United States or abroad, in the design, development, engineering, manufacture, production, assembly, testing, repair, maintenance, modification, operation, demilitarization, destruction, processing, or use of defense articles that are subject to the ITAR [sic]; or the furnishing to foreign persons of any technical data controlled under 22 CFR 121.1 whether in the United States or abroad are

> **under the licensing jurisdiction of the Department of State. (4) Brokering activities (as defined in 22 CFR 129) of "military commodities" that are subject to the ITAR are under the licensing jurisdiction of the Department of State.**

139. Of note, the above-referenced Related Controls paragraph has a circular reference with respect ECCN 0A919.a.1, and should more appropriately state "destruction, processing, or use of defense articles described on the U.S. Munitions List"; otherwise the Related Controls paragraph might suggest that DDTC has ceded controls over defense services to BIS, which is not likely because the EAR does not control services (see Line 106, above and Exhibit 1).

140. The EAR has no entry for a corresponding control for "technology" at what would be, presumably, ECCN 0E919.

141. As such, a reverse implication of Note 3 to paragraph (f) is that DDTC only intends to maintain jurisdiction over information related to the integration of EAR-controlled items into US-origin defense articles worldwide and all defense articles, regardless of origin, when those defense articles are in the US.

142. I believe this is a bad idea, but have nevertheless attempted to implement it in my recommend rewrite of the principle, as further described below.

143. Another reverse implication of Note 3 to paragraph (f) is that DDTC intends to maintain jurisdiction over pure services and software, even those related to the integration of EAR-controlled items into foreign military commodities outside the US.

144. I do not believe this was DDTC's intent in using the term "technology."

145. I believe DDTC intended to shift jurisdiction of certain services and technical data to the EAR.

146. As such, my recommendation includes adding verbiage to both the ITAR definitions of technical data at ITAR § 120.10 and defense service at ITAR § 120.9.

147. And another reverse implication of Note 3 to paragraph (f) is that DDTC intends to maintain jurisdiction over all other technology, including that for incorporating into and maintenance and repair of EAR-controlled items in foreign military commodities outside the US.

148. I do not believe this was the intended result of Note 3 to paragraph (f), as discussed herein above and as further described below.

149. Should such a significant proclamation impacting the ITAR definition of technical data (and perhaps even defense services) appear in a paragraph to a note in a single USML category?

150. I recommend the principle be implemented via modification to the ITAR definitions of technical data at ITAR § 120.10 and defense service at ITAR § 120.9.

151. Moreover, is it the intent of DDTC to, on the one hand, maintain ITAR control over some technology (e.g., integration of EAR-controlled items into US-origin defense articles), but release closely related technology (e.g., integration of EAR-controlled items into foreign military commodities) all the way to classification under the EAR as EAR99?

152. As already stated herein, I believe this is a bad idea, but I nevertheless attempt to provide clearer language to bring it into effect via modification to the ITAR definitions of technical data at ITAR § 120.10 and defense service at ITAR § 120.9.

153. As such, I recommend Note 3 to paragraph (f) by implemented via modification to the ITAR definitions of technical data at ITAR § 120.10 and defense service at ITAR § 120.9 as follows:

> §120.9 Defense service.
>
> (a) Defense service means:
>
> (1) The furnishing of assistance (including training) to foreign persons, whether in the United States or abroad in the design, development, engineering, manufacture, production, assembly, testing, repair, maintenance, modification, operation, demilitarization, destruction, processing or use of defense articles;
>
> ...

(b) ~~[Reserved]~~ **The definition in paragraph (a) of this section does not include:**

(1) The furnishing of assistance to foreign persons directly related to the entire lifecycle for:

(i) infrared focal plane array (IRFPA) in permanent encapsulated sensor assemblies described in the EAR;

(ii) image intensifier tubes (IITs) in an item described in the EAR; or

(iii) items subject to the EAR in items described in ECCN 0A919.

...

§120.10 Technical data.

(a) Technical data means, for purposes of this subchapter:

(1) Information, other than software as defined in §120.10(a)(4), which is required for the design, development, production, manufacture, assembly, operation, repair, testing, maintenance or modification of defense articles. This includes information in the form of blueprints, drawings, photographs, plans, instructions or documentation.

...

(b) The definition in paragraph (a) of this section does not include:

...

(5) provided such information does not include design or manufacturing process descriptions (e.g., steps, sequences, conditions, parameters), information directly related to the entire lifecycle for:

(i) IRFPA in permanent encapsulated sensor assemblies described in the EAR; or

(ii) image intensifier tubes (IITs) in an item described in the EAR; or

(6) information directly related to the entire lifecycle for items subject to the EAR in items described in ECCN 0A919; or...

RECOMMENDATIONS

154. Please consider the above-described and following recommended revisions (recommended additions in **bold red font**; deletions in ~~blue strikethrough font~~) for not only USML Cat. XII, but also, as applicable, for other parts of the ITAR.

§120.9 Defense service.

(a) Defense service means:

(1) The furnishing of assistance (including training) to foreign persons, whether in the United States or abroad in the design, development, engineering, manufacture, production, assembly, testing, repair, maintenance, modification, operation, demilitarization, destruction, processing or use of defense articles;

...

(b) ~~[Reserved]~~ **The definition in paragraph (a) of this section does not include:**

(1) The furnishing of assistance to foreign persons directly related to the entire lifecycle for:

(i) infrared focal plane array (IRFPA) in permanent encapsulated sensor assemblies described in the EAR;

(ii) image intensifier tubes (IITs) in an item described in the EAR; or

(iii) items subject to the EAR in items described in ECCN 0A919.

...

§120.10 Technical data.

(a) Technical data means, for purposes of this subchapter:

(1) Information, other than software as defined in §120.10(a)(4), which is required for the design, development, production, manufacture, assembly, operation, repair, testing, maintenance or modification of defense articles. This includes information in the form of blueprints, drawings, photographs, plans, instructions or documentation.

...

(b) The definition in paragraph (a) of this section does not include:

(1) information concerning general scientific, mathematical, or engineering principles commonly taught in schools, colleges, and universities;~~, or~~

(2) information in the public domain as defined in §120.11 of this subchapter; ~~or~~

(3) telemetry data as defined in note 3 to Category XV(f) of part 121 of this subchapter;~~.~~

(4) provided such information does not include design methodology, engineering analysis, or manufacturing know-how for an infrared focal plane array (IRFPA) in Category XII of part 121 of this subchapter, information directly related to the entire lifecycle for:

(i) IRFPAs in higher-level packaged assemblies not in Category XII of part 121 of this subchapter; or

(ii) external interface control documentation for higher-level packaged assemblies not in Category XII of part 121 of this subchapter; or

(5) provided such information does not include design or manufacturing process descriptions (e.g., steps, sequences, conditions, parameters), information directly related to the entire lifecycle for:

(i) IRFPA in permanent encapsulated sensor assemblies described in the EAR; or

(ii) image intensifier tubes (IITs) in an item described in the EAR; or

(6) information directly related to the entire lifecycle for items subject to the EAR in items described in ECCN 0A919; or

~~It also does not include~~**(7)** basic marketing information on function or purpose or general system descriptions of defense articles.

...

§120.45 End-items, components, accessories, attachments, parts, firmware, software, systems, and equipment.

...

(f) Software includes but is not limited to the system functional design, logic flow, algorithms, application programs, operating systems, and support software for design, implementation, test, operation, diagnosis and repair. A person who intends to export only software should, unless it is specifically enumerated in §121.1 of this subchapter (e.g., USML Category XIII(b)), apply for a technical data license pursuant to part 125 of

this subchapter. **Software that converts a defense article into an item described in the EAR or an item described in the EAR into a defense article is directly related to the defense article. When a defense article has been converted into an item described in the EAR through software, the presence of the software that prevents the item from meeting or exceeding a USML control parameter does not make the item subject to the ITAR.**

Category description:

Category IX—Military Training Equipment and Training
…
(b) Simulators, as follows:
…
(2) ~~(3)~~ [Reserved]

(3) EO/IR simulation or projection system software and associated databases that replicate via simulation:

(i) the output data or information provided by any article controlled in USML Category XII;

(ii) a radiometrically calibrated spectral signature of any article controlled in this subchapter; or

(iii) volumetric effects of plumes or military operational obscurants or countermeasure effects; or
…
(e) Technical data (see §120.10 of this subchapter) and defense services (see §120.9 of this subchapter):
…
(2) Directly related to the software and associated databases enumerated in paragraphs **(b)(3) and** (b)(4) of this category even if no defense articles are used or transferred; or
…
USML Cat. XII:

*(f)(1) Technical data (as defined in § 120.10 of this subchapter) **specially designed for** and defense services (as defined in § 120.9 of this subchapter) directly related to the defense articles enumerated in paragraphs (a) through (e) of this category. (See § 125.4 of this subchapter for exemptions.) (MT for technical data and defense services related to articles designated as such.)

(2) Technical data (as defined in § 120.10 of this subchapter) directly related to the defense articles enumerated in paragraphs (c)(1), (c)(2), (c)(9) or (e)(3)-(5) of

this category. (See § 125.4 of this subchapter for exemptions.) (MT for technical data and defense services related to articles designated as such.)

~~**Note 1 to paragraph (f):** Technical data and defense services directly related to image intensifier tubes and specially designed parts and components therefor controlled in paragraph (c)(1) of this category, infrared focal plane arrays (IRFPAs) and detector elements therefor controlled in paragraph (c)(2) of this category, integrated IRFPA dewar cooler assemblies (IDCAs) controlled in paragraph (c)(9) of this category, wafers incorporating IRFPA or ROIC structures controlled in paragraph (e)(3) of this category, and specially designed readout integrated circuits (ROICs) controlled in paragraphs (e)(4) and (5) of this category, remain subject to the ITAR even if the technical data or defense services could also apply to items subject to the EAR.~~

~~**Note 2 to paragraph (f):** Software and technical data include:~~

~~A. Design or manufacturing process descriptions (e.g., steps, sequences, conditions, parameters) for lasers described in paragraphs (b)(6) and (b)(9) through (13) of this category, IITs controlled in paragraph (c)(1) of this category and their parts and components controlled in paragraph (e)(2) of this category (including tube sealing techniques, interface techniques within the vacuum space for photocathodes, microchannel plates, phosphor screens, input glass-window faceplates, input or output fiber optics (e.g., inverter)), IRFPAs and detector elements therefor controlled in paragraph (c)(2) of this category, integrated IRFPA dewar cooler assemblies (IDCAs) controlled in paragraph (c)(9) of this category, wafers incorporating structures for an IRFPA and detector elements therefor controlled in paragraph (c)(2) or structures for ROICs controlled in paragraph (e)(4) or (5) of this category, and specially designed ROICs controlled in paragraphs (e)(4) and (5) of this category (including bonding or mating (e.g., hybridization of IRFPA detectors and ROICs), prediction or optimization of IRFPAs or ROICs at cryogenic temperatures, junction formation, passivation).~~

~~**Note to paragraph A of note 2 to paragraph (f):** Technical data does not include information directly related to basic operating instructions, testing results, incorporating or integrating IRFPAs into higher level packaged assemblies not enumerated in this category, or external interface control documentation associated with such assemblies or assemblies subject to the EAR, provided such information does not include design methodology, engineering analysis, or manufacturing know-how for a USML controlled IRFPA.~~

~~B. Software that converts an article controlled in this category into an item subject to the EAR or an item subject to the EAR into an article controlled in this category is directly related to the defense article controlled in this category. When a defense article has been converted into an item subject to the EAR through software, the presence of the software that prevents the item from meeting or exceeding a USML control parameter does not make the item subject to the ITAR.~~

~~C. EO/IR simulation or projection system software that replicates via simulation either the output data or information provided by any article controlled in this category, a radiometrically calibrated spectral signature of any article controlled in this subchapter, volumetric effects of plumes or military operational obscurants, or countermeasure effects.~~

~~Note 3 to paragraph (f): Technology for incorporating or integrating IRFPAs into permanent encapsulated sensor assemblies subject to the EAR, or integrating such assemblies into an item subject to the EAR, and integrating IITs into an item subject to the EAR, including integrating items subject to the EAR into foreign military commodities outside the United States, is subject to the EAR.~~

...

Category XIII— Materials and Miscellaneous Articles

(a) ~~Cameras and specialized processing equipment therefor, photointerpretation, stereoscopic plotting, and photogrammetry equipment which are specifically designed, developed, modified, adapted, or configured for military purposes, and components specifically designed or modified therefor.~~ **[Reserved]**

Matthew J. Lancaster

Matthew J. Lancaster
PRIVATE CITIZEN

May 27, 2015

Exhibit 1

From: [redacted]
To: Matthew Lancaster
Subject: RE: BETA Site Advisory Opinion Request
Date: Wednesday, February 04, 2015 9:26:07 AM

Hello Matthew,
I have imbedded my response and comments in the email below with //.

Please let me know if you have any questions.

[redacted]
U.S. Department of Commerce
[redacted]
[redacted]@bis.doc.gov

-----Original Message-----
From: Matthew Lancaster [redacted]
Sent: Monday, February 02, 2015 4:31 PM
To: [redacted]
Subject: RE: BETA Site Advisory Opinion Request

Good Afternoon [redacted]

Thank you for taking the time with me on the phone today to ensure I understood the guidance provided below. It was very helpful.

During our discussion, our focus turned to Software-as-a-Service (SaaS) hosted by a cloud-based storefront. I asserted that while the BIS Advisory Opinion dated November 13, 2014 (the "Cloud Store AO") was helpful for owners of cloud-based storefronts, I had concerns that the Cloud Store AO did not necessarily mean that companies providing SaaS to the cloud-based storefront provider (e.g. [redacted]) fell within the transaction described. In other words, I opined that a company, like [redacted], providing SaaS, like [redacted] for, say, [redacted], to sell through [redacted] cloud-based storefronts had export obligations because [redacted] would have knowledge that [redacted] intended to make [redacted] available worldwide through the [redacted] cloud-based storefront. You commented that this might not be the case, since, in this scenario, the transaction between [redacted] and [redacted] occurs wholly within the US, so there is no export. Thereafter, [redacted] is not exporting [redacted] per the Cloud Store AO.

I found this perspective compelling.

//The EAR does not control services. In this case there is no export of software to the end user or [redacted] in the U.S. There was guidance given in the cloud computing advisory opinion of 1/13/2009. In your company's scenario there could be a potential export taking place when the software to be hosted is sent to [redacted]. If [redacted] will host it on servers located outside of the U.S., then there would be an export to [redacted] server hosting location(s).

We then discussed the fact that some SaaS, like [redacted], is time-bombed. Users get a free trial period after which a subscription must be purchased in order to continue to access [redacted]. When an [redacted] user chooses to subscribe, [redacted] collects information on the user. If at that time the user identifies himself with an address in a proscribed destination, what obligations does [redacted] have to block the user's access to:
1) future access to any [redacted] SaaS (including free content); and,
2) current and future access to [redacted] premium products?

In other words, in this no-export-has-happened environment of cloud-based storefronts, must [redacted] refuse service to an individual who identifies himself with an address in a proscribed destination (e.g., Cuba) until [redacted] obtains an export license?

//This is still a cloud based service. There is no export to the end users. Before and after the trail expires, there is no export of the software to the end user, therefore, no controllable export.
//But I want to address the scenario if there were to be an export of software to the end user. We issued an advisory opinion on October 24, 2013 regarding time restricted EAR99 software posted online. Please review. It says the act of posting software on the internet where it can be downloaded by anyone does not establish "knowledge" of a prohibited export or reexport nor triggers any "red flags" necessitating the affirmative duty to inquire under the "Know your Customer" guidance provided in the EAR. It goes on to address IP address collection by saying a violation would not occur if the IP address of the person downloading the software is collected by the software provider at the time of download and stored as a "footprint" in the machine code of the software provider's data base, BUT is not tracked or used for any purpose by the software provider.

//I consulted my director who signed these advisory opinions. She agreed with this assessment for EAR99 software such as yours.

//Bottom line is if you are making yourself aware of the end users then you have "knowledge" to do something, but you are not obligated by the EAR to make yourself aware.

And, what happens, if anything, to [redacted] obligations if the user is still within the trial period, but chooses to voluntarily identify himself by completing his user profile, indicating an address in a proscribed destination? What if he completes this user profile before the trial period is initiated (must he, at that point, be banned from the chat rooms - or should we keep him out of the discussion from the very beginning by maintaining screens against IP addresses)?

//As stated above, since this is a SaaS, if there is no export then the question is moot. However, you may want to contact Office of Foreign Asset Controls at the Dept. of Treasury. I believe they cover services to the embargoed countries.

//However, going to the scenario if there is an export of software to the end user, then at the time of export there was no "knowledge" then there is no violation even if during the trial period you obtain "knowledge" because of a voluntary disclosure by the end user. But there would be basis for blocking the subscription use after the 30 day period was over. The EAR does not obligate you to block them from chat rooms (chatting online would not be an export). If, hypothetically the same end user wanted to download another free trial of some other software offering your company made available for free and anonymous download then you would not have "knowledge" of it. In other words, you are not obligated to find the end user and block them for software exports you make free and anonymous.

Thank you for both your time and consideration regarding these questions and scenarios. As discussed on the phone, to date we've been very conservative, and I don't want to recommend we drop any existing shields if to do so would run contrary to the intent of the US regulators.

Best Regards,
Matthew J. Lancaster [redacted]

-----Original Message-----
From: [redacted] @bis.doc.gov]
Sent: Tuesday, January 27, 2015 10:22 AM
To: Matthew Lancaster

Phone:....[redacted]

Message:....[redacted] seeks advice for three (3) questions:

1) Given Note 4 to Category 5, Part 2 to Supplement 1 to Part 774 (the "CCL"), are [redacted] books which come with compact disks (CDs) "published" within the meaning of EAR Part 734.7, and, as such, insofar as provided in accordance with EAR Part 724.7(b), outside the scope of the EAR in accordance with EAR Part 734.3(b)(3)?

// The book itself would certainly be public but if there is software on the CD then there could be something of control.

2) Does Note 4 to Category 5, Part 2 to the CCL (hereinafter referred to as "Note 4") extend to evaluation versions of software when the full version definitively qualifies for exclusion by operation of Note 4?

//Yes, note 4 would apply to time bombed software but the publicly available provisions do not apply to trial version that expire. This is a restriction on the use of the software which is against publicly available.

3) Is standalone software and Software-as-a-Service capability (SaaS) publicly available if readily available at one or more libraries open to the public or university libraries after having been made available to such libraries at a price which is not intended to exceed the cost of reproduction and distribution?

// I have not heard of this method of making software publicly available because it usually applies to information found in libraries, not executable software. For example, the library may have a copy of [redacted] that was given to them for users to use for their word processing needs. This would not mean that [redacted] is publicly available. It is, however, mass market software. The test would be if someone could legally (without breaking a license agreement) have a copy of the software from the library for their unrestricted use.

In CCATS [redacted], BIS determined that some of [redacted] software, including [redacted], classifies for export from the US as EAR99 - based, we believe, largely on Note 4, which excludes an item that incorporates or uses 'cryptography' from Category 5, Part 2 controls if the item's primary function or set of functions is not 'information security', including "applied geosciences – mining / drilling, atmospheric sampling / weather monitoring, mapping / surveying, dams / hydrology" (see http://www.bis.doc.gov/index.php/policy-guidance/encryption/encryption-faqs#15).

[redacted] believes that earlier versions of [redacted] are also excluded from Category 5, Part 2 controls, including, very likely, evaluation copies of the same.

[redacted] publishes books about the science, application, and technology of geographic information systems (GIS). One such book, for example, which is entitled [redacted], comes with two compact disks. One has a fully functional copy of [redacted] software that expires 180 days after installation; the other has exercise data which does not expire. The exercise data is used in conjunction with exercise chapters, which each contain two to four exercises showing how to accomplish a particular GIS task in a realistic context, such as symbolizing and labeling maps, querying maps, and geocoding addresses.

According to [redacted] is available at over 500 libraries (see [redacted]). Many other [redacted] books and [redacted] products can also be found by executing a search in [redacted].

[redacted] seeks formal guidance from BIS to confirm our conclusion that if an item is:
1) excluded from Category 5, Part 2 of the CCL by operation of Note 4 to the same, and:

//Yes, [redacted] is Note 4 software.

2) readily available at one or more libraries open to the public or university libraries after having been made available to such libraries either for free or at a price that does not exceed the cost of reproduction and distribution - then the item is published within the meaning of EAR Part 734.7 and outside the scope of the EAR in accordance

Subject: FW: BETA Site Advisory Opinion Request

Hello Matthew,
I have tried to answer your questions below. My answers are marked with a //. Please let me know if you have any questions. I am available tomorrow by phone, if needed.

[redacted]
U.S. Department of Commerce
[redacted]@bis.doc.gov

-----Original Message-----
From: [redacted]
Sent: Thursday, January 22, 2015 10:12 AM
To: [redacted]
Subject: FW: BETA Site Advisory Opinion Request

Good morning, [redacted]

Would one of you like to respond to this???

Thanks
[redacted]

U.S. Department of Commerce
Bureau of Industry and Security
[redacted]@bis.doc.gov
www.bis.doc.gov

-----Original Message-----
From: BIS Website [mailto:web_site@bis.doc.gov]
Sent: Wednesday, January 21, 2015 8:45 PM
To: REGPolicyWeb
Subject: BETA Site Advisory Opinion Request

You have a new submission.

First Name:....Matthew

Last Name:.....Lancaster

Email:.....[redacted]

with EAR Part 734.3(b)(3).

//it appears that the offered software does have restrictions on it, in that it is a trial version. It would not be considered published if there is a time restriction on the use of it.

Furthermore, [redacted] seeks BIS concurrence with respect to our application of Note 4 to evaluation copies of software (especially where the full version of the software definitively falls within the Note 4 exclusion).

//Yes, Note 4 can apply to the trial version.

Finally, [redacted] has a strong tradition of supporting libraries and schools by striving to provide our products and services to such institutions at a price which does not exceed the cost of reproduction and distribution. As such, for example, [redacted] software is available at [redacted] and [redacted] (see [redacted]). Given Note 4 applicability, and given further the availability of software at one or more libraries open to the public or university libraries, and that [redacted] strives to make such software available to such institutions at a price which does not exceed the cost of reproduction and distribution, [redacted] believes that such software is outside the scope of the EAR pursuant to EAR Part 734.3(b)(3). Furthermore, under these same conditions, [redacted] believes this to be the case even with respect to SaaS. [redacted] seeks BIS confirmation of these position for software and SaaS as well.

// Making copies available at university libraries is not available to anyone. For one, the general public does not have access to university libraries and computers. Those are software licenses available to students. If the full software is made available for anyone to download online or take from public libraries then it could be considered public. The library method of making software publicly available is less heard of since you can reach a much wider audience online.

Regulatory Policy Division
Bureau of Industry and Security
U.S. Department of Commerce
14th Street and Pennsylvania Ave., N.W.
Room 2099B
Washington, D.C. 20230

Subject: Revisions to the Export Administration Regulations (EAR): Control of Fire Control, Range Finder, Optical, and Guidance and Control Equipment

To Whom It May Concern:

I am a single-molecule biophysicist by training, having developed several complex optical instruments capable of detecting piconewton-scale forces, and nanometer-scale fluorescence images. My Ph.D. work in studying molecular biophysical interactions on a single-molecule scale inspired my current postdoctoral work in engineering novel molecular recognition interactions to develop synthetic optical sensors. My scientific training in the past two years has focused on merging these two previously disparate areas of science: optical microscopy and nanosensor development. In this short time, I've developed a novel platform for creating synthetic near-infrared optical biosensors. This seminal body of work resulted in a rapidly growing area that has impacted the fields of single-molecule biophysics, neuroscience, cell biology, and plant biology. **ALL of these advances have been made using technology that will be directly impacted by the proposed revision to the US Munitions List!**

I, Markita Landry, from MIT, appreciate the opportunity to comment on the proposed changes to the EAR. Our lab routinely uses 1D InGaAs arrays, 2D InGaAs arrays, photomultiplier tubes, FLIR handheld InGaAs imaging cameras, and EM-CCDs. Many of the students trained in our group utilize these devices and have provided both pedagogic learning tools as well as great advances in technology development. As a whole, MIT is very hesitant to purchase any ITAR restricted items as restricting their access to foreign graduate students is onerous. As a Principal Investigator, it would be impossible for me to justify the purchase of a scientific tool that could not be used by many of my students.

It would be especially devastating for the photonics research community if the US government were to place ITAR restrictions on scientific grade cameras, such as intensifier CCD, near infrared InGaAs and EMCCD cameras. If this were to happen, it will setback US research significantly, especially, in contrast to the research in EU and Asia have no such restrictions exist from their respective Governments.

If you require any further information, please contact me at (919)349-4877 or via email at markita@mit.edu.

Sincerely,

Markita del Carpio Landry, Ph.D.
NSF Postdoctoral Fellow
Strano Research Group
Department of Chemical Engineering
Massachusetts Institute of Technology

MASSACHUSETTS INSTITUTE OF TECHNOLOGY

Maria T. Zuber
Vice President for Research
E. A. Griswold Professor of Geophysics

77 Massachusetts Avenue, Building 3-234
Cambridge, Massachusetts 02139–4307
Phone 617–253-3206
Email mtz@mit.edu

July 6, 2015

Regulatory Policy Division
Bureau of Industry and Security
U.S. Department of Commerce
By email to publiccomments@bis.doc.gov, subject "RIN 0694–AF75"

MIT appreciates the opportunity to comment in response to the Bureau of Industry and Security (BIS) RIN 0694–AF75, *Revisions to the Export Administration Regulations (EAR): Control of Fire Control, Range Finder, Optical, and Guidance and Control Equipment the President Determines No Longer Warrant Control Under the United States Munitions List (USML)*. Our comments will focus on infrared sensors.

We recognize and appreciate the efforts of the Departments of Commerce, Defense, and State to rationalize, clarify, and focus U.S. export controls. RIN 0694–AF75 and the accompanying RIN 1400-AD32 regarding USML Category XII, represent progress toward positive USML and CCL descriptions of controlled items.

We fully appreciate the value of night vision technology in defense applications, and the importance of maintaining the U.S. advantage in this area. However, commercial infrared sensors are important to many areas of scientific research, and these proposed rules represent an increase in control that would make important scientific research more difficult, or impossible, to conduct at U.S. universities. Our comments to RIN 0694–AF75 and RIN 1400-AD32 urgently recommend limiting ITAR controls to military night vision items only.

We offer the following comments:

1. Too many infrared sensors required for scientific research would be subject to ITAR control.

Use of ITAR-controlled devices at U.S. universities is problematic, since use by any non-U.S. student, researcher, or faculty member could be seen as an ITAR "defense service" or the transfer of ITAR "technical data". RIN 0694–AF75 and the complementary RIN 1400-AD32 would mean that devices required for scientific research would be subject to increased ITAR control, and that some EAR-controlled devices already in use would change jurisdiction to ITAR-controlled. This creates confusion and additional burden to figure out what the new restrictions mean for staffing of on-going projects, and could cause us to terminate active projects or refuse new ones. In addition, exporting devices for use in scientific installations outside the U.S., such as astronomical observatories, becomes more difficult

for high-profile international collaborations, potentially stopping important research.
This is particularly troubling in light of the October 2012 ***Critical Technology Assessment: Night Vision Focal Plane Arrays, Sensors, and Cameras***[1], which had concluded that:

- "Military-use-only night vision components and equipment have different physical and technical characteristics than dual-use night vision components and equipment (e.g., weapons mounting, stability software, special packaging), which could be used as a discriminator in controlling items on the USML and CCL
- "Uncooled infrared FPA size is not an indication of military application
- "IIT Generation is not an indication of military application
- "There is widespread availability of night vision components and equipment among Wassenaar Arrangement regime members.
- "There is evidence that certain items across all types of night vision components and equipment are available from outside of regime members. These countries include Belarus, China, India, Israel, Singapore, and Taiwan.
- "There is clear evidence that foreign availability exists outside of regime members at all size ranges for uncooled FPAs, uncooled cameras, and IIT imagers."

Infrared sensors are important scientific research tools, used across a wide range of disciplines including astronomy and space science, telecommunication, photonics, computer processor-memory interconnects, materials engineering, thermal management, energy storage, energy conversion, photovoltaic devices, groundwater management, computational ophthalmology, and molecular medical diagnostic tools.
The proposed rules would disadvantage U.S. researchers in all of these scientific areas compared to their counterparts in other countries, by forcing them to either prevent highly qualified non-U.S. researchers from participating in research at U.S. universities, or use inferior instruments. This U.S. research disadvantage would be reduced by controlling non-military infrared sensors under the EAR.
Since State Department jurisdiction takes precedence, we've made more specific comments in our response to RIN 1400-AD32 regarding USML Category XII, but are including the concern in these RIN 0694-AF75 comments because they will need to change in complementary manner.

2. 6E615 "Technology" control of "operation" significantly and unnecessarily constrains research use of infrared cameras.
We understand that transfer of technology required for development, production, installation, maintenance, repair, overhaul or refurnishing of controlled infrared cameras could provide information enabling similar technology to be developed outside the U.S.
However, the transfer of technology required to merely operate an infrared camera doesn't enable the operator to develop or produce

[1] https://www.bis.doc.gov/index.php/forms-documents/doc_view/630-night-vision-assessment

an infrared camera, just the ability to acquire images with that specific camera.

Control of operation technology disadvantages U.S. researchers compared to their counterparts in other countries, by forcing them to either prevent highly qualified non-U.S. researchers from participating in research at U.S. universities, or use inferior instruments.

MIT strongly recommends the following revision to 6E615:

- 6E615 ‘‘Technology’’ ‘‘required’’ for the ‘‘development,’’ ‘‘production,’’ installation, maintenance, repair, overhaul or refurbishing of commodities controlled by 6A615, equipment controlled by 6B615, or ‘‘software’’ controlled by 6D615 (see List of Items Controlled).

3. 6E001 and 6E002 "Technology" may unnecessarily restrict the use of infrared sensors controlled by 6A002, 6A003, or 6A993.

Related Controls (3) for 6E002 and 6E003 states that technology for encapsulating an IRFPA, whether ITAR or EAR, resulting in a "permanently encapsulated sensor assembly" is EAR controlled, "provided such information does not include design methodology, engineering analysis, or manufacturing know-how." The scope of this proviso is ambiguous. Further, for the same reasons as (3) above, we believe that operation instructions don't require this control.

MIT recommends that the last sentence of Related Controls (3) for 6E002 and 6E003 should be revised to state:

- "This technology includes the testing for a focal plane array in a ‘‘permanent encapsulated sensor assembly’’ subject to the EAR, mechanical dimensions and physical characteristics of the sensor assembly, provided such information does not include design methodology, engineering analysis, or manufacturing know-how related to the IRFPA."

MIT appreciates the opportunity to provide BIS with the above comments on RIN 0694-AF75.

Sincerely,

Maria T. Zuber

From: McIntire, Jacquenette <Jacquenette.McIntire@astronics.com>
Sent: Monday, July 06, 2015 12:44 PM
To: PublicComments; DDTCPublicComments@state.gov
Subject: Public Comments
Attachments: Comments on Proposed Regulatory Changes 7-2015.pdf

We respectfully submit the attached comments on the proposed changes:

REGARDING AMENDMENT TO THE INTERNATIONAL TRAFFIC IN ARMS (ITAR) REGULATIONS:
REVISION OF U.S. MUNITIONS LIST CATEGORY XII, RIN 1400-AD32

And

REGARDING REVISION TO THE EXPORT ADMINISTRATION REGULATIONS (EAR):
15 CFR PARTS 734, 740, 742,744, 772 AND 774, RIN 0694-AF75

Thank you.

Jacquenette J. McIntire
Quality Assurance & Export Compliance Manager
Max-Viz, Inc.
15940 SW 72nd Ave, Portland, OR 97224 USA
503-968-3036 ext. 110

ASTRONICS
MAX-VIZ
Max-Viz Enhanced Vision Systems
See Clearly, Fly Safely ®

This E-mail is confidential. It may also be legally privileged. If you are not the addressee you may not copy, forward, disclose or use any part of it. If you have received this message in error, please delete it and all copies from your system and notify the sender immediately by return E-mail.

Internet communications cannot be guaranteed to be timely, secure, error or virus-free. The sender does not accept liability for any errors or omissions.

ASTRONICS
MAX-VIZ

15940 S.W. 72nd Avenue • Portland, OR 97224 USA
PHONE: 503-968-3036 • FAX: 503-968-7615

REQUEST FOR COMMENTS

REGARDING AMENDMENT TO THE INTERNATIONAL TRAFFIC IN ARMS (ITAR) REGULATIONS: REVISION OF U.S. MUNITIONS LIST CATEGORY XII
RIN 1400-AD32
TO THE ATTENTION OF E-MAIL: *DDTCPublicComments@state.gov*
Max-Viz, Inc. offers the following comments below in response to RIN 1400-AD32, pertaining to changes in the controls on Category XII (fire control, range finder, optical and guidance and control equipment) of the U.S. Munitions List (USML).

RE: REVISION TO THE EXPORT ADMINISTRATION REGULATIONS (EAR): 15 CFR PARTS 734, 740, 742,744, 772 AND 774.
RIN 0694-AF75
TO THE ATTENTION OF E-MAIL: publiccomments@bis.doc.gov.
Max-Viz, Inc. offers the following comments below in response to RIN 0694-AF75 pertaining to Revision to the Export Administration Regulations (EAR): Control of Fire Control, Range Finder, Optical, and Guidance and Control Equipment the President Determines No Longer Warrant Control under the United States Munitions List (USML).

Comments:
Max-Viz, Inc. is a small Aerospace company focused on providing Enhanced Vision Systems for civil aircraft. We have many concerns regarding the proposed changes to **ITAR 22 CFR §120-130** and **EAR 15 CFR §730-774** and their effects on our ability to remain competitive in the global market; our ability to sell, export and re-export Max-Viz, Inc. Enhanced Vision Systems known in the regulations as Thermal Imaging Cameras.

While we support the **Export Control Reform Initiative (ECRI),** clarification and a tempered approach to the commercial effects of over regulation is needed to ensure that the proposed rule changes achieve the stated goals of the **ECRI**.

Max-Viz, Inc. cameras are classified by the Department of State via CJ determination as ECCN 6A003 Camera systems. They are designed, developed and manufactured for civil use and are under the Department of Commerce control.

Regarding the proposed regulatory changes for ECCN 6A003 Cameras, and Camera systems:

- We oppose changes to 740.16(a,b) License exception APR that would restrict the use of 6A003 items to and among Country Group A:1 and cooperating countries for products, cameras and camera systems with greater than 111,000 detector elements. Some Max-Viz, Inc. products with ECCN 6A003 currently contain less than 111,000 and some contain more, such as 327,680 detector elements. All are designed for civil use. Restricting use and export would harm our company's ability to stay competitive in the global market place.

- We oppose changes to expand 744.9 end-use and end-user requirement for all of the 6A003 items. This would require a license to export, re-export or transfer (in-country) items. If we cannot determine if our camera sent for a stocking order to an authorized integrator company (aircraft manufacturer) will be incorporated into military aircraft at the time we ship it, a license would be required for all shipments. This change would make our "authorized company" integrator license useless, and result in an increase in Export License applications. Any delays in that process delay shipments, and cause US companies such as Max-Viz, Inc. to become less competitive in the global market place for 6A003 thermal imaging cameras.

15940 S.W. 72nd Avenue • Portland, OR 97224 USA
PHONE: 503-968-3036 • FAX: 503-968-7615

- We oppose ECCN 6D003.c. Software that is designed for 6A003 cameras incorporating IRFPA's designated under a worldwide Regional Stability (RS) control is going backwards in time and would require a license to export everywhere including Canada. This would result in huge increase of export license applications, with unnecessary burden on a small company such as Max-Viz, Inc.

- We are very concerned and unclear about new ECCN 6D991 Software controls that are specially designed for "Development", "Production" or "Use" of 6A003 Cameras and Camera systems. We cannot determine if it affects our finished product or refers to the Software contained within our cameras. All of our cameras have internal software but do not require external software for operation. This must be clarified in order to assure we can comply with the regulation, if it is applicable. Imposing a worldwide RS control for the software that is currently EAR99 does not make sense to us and will hurt our ability to remain competitive in the global marketplace of thermal imaging cameras. Eliminating the STA exception: it is unclear why that would be ineligible, and what the rational for this is? **Because of these concerns, we oppose this as written.**

- We are very concerned and unclear about new ECCN 6D994 Software that is specially designed for "maintenance", "repair" or "overhaul" of 6A003 Cameras and Camera systems. If these controls were put into place and it refers to the software internal to our camera system then we would be unable to perform software bug fixes or software upgrades in the field without an export license. We are unable to determine if this ECCN applies to our Max-Viz, Inc. 6A003 cameras, and how it affects our finished products. This must be clarified in order to assure we can comply with the regulation, if it is applicable. Imposing a worldwide RS control for the software that is currently EAR99 does not make sense to us and will hurt our ability to remain competitive in the global marketplace of thermal imaging cameras. Eliminating the STA exception: it is unclear why that would be ineligible, and what the rational for this is? **Because of these concerns, we oppose this as written.**

- With respect to ECCN 0A919 for military commodities outside the US that incorporate our Max-Viz, Inc. 6A003 thermal imaging cameras, we disagree with increasing the scope to include Foreign military aircraft commodities.
  We sell thermal imaging cameras to aircraft manufacturers, they incorporating 6A003 cameras into helicopters, jets, fixed wing aircraft for Military or government entity use for transportation, Medical EMS use, and firefighting capabilities. An export license currently allows this. Requiring a license and restricting re-exports of 6A003 cameras installed on aircraft in this scenario, requiring a license worldwide, except Canada is an undue burden for the all parties involved and may not aid in Regional Stability as intended.
  Because of these concerns, we oppose this change.

Concerning the use of the phrase "permanent encapsulated sensor assembly" in regards to IRFPA assemblies:

- It is unclear what the term "permanent" means exactly as it is not a term normally identified with electronics. Therefore a sensor assembly could be deemed to be "not permanent enough" in its encapsulated assembly; the criteria is undefined.
- The term "encapsulated" or "casing" is not clearly defined.
- With many "encapsulated sensor assemblies" on the market, it cannot be determined with certainty if sensors are removed, whether they would become damaged or destroyed, or rendered inoperable.
- Is there a compelling reason to define the IRFPA sensors this way? We don't agree with this method.

ASTRONICS
MAX-VIZ

15940 S.W. 72nd Avenue • Portland, OR 97224 USA
PHONE: 503-968-3036 • FAX: 503-968-7615

- Faulty sensors are returned to the manufacturer for repairs and servicing under warranty. We think this definition, and further this approach to IR sensors is misguided and unnecessary.

Because of these concerns, we oppose this new term as written.

Concerning the proposed new license requirements for the Export to Canada of our camera systems:

- We support the current export availability of 6A003 cameras to Canada.
- Increasing restrictions to require all exports obtain an export license will cause an undue burden on small companies such as Max-Viz, Inc., and will not ensure Regional Stability will benefit from this regulatory change.
- We export our ECCN 6A003 cameras to Canada for civil use and for use in Fire suppression, which may or may not be civil use contractors. We oppose the Regional Stability designation on items that today and for many years past, have not required an export license to Canada. The economic impact of this change alone would be greatly felt by a small company such as Max-Viz, Inc. It will drive Canadian companies to purchase 6A003 cameras with IRFPA's from other foreign competitors that are less regulated then the US.
- For all small companies, such as Max-Viz, Inc., the additional work added to obtain export licenses for Canada will make us less competitive in the foreign market place. Why buy American when they can go to other nations and obtain products with little to no restrictions on export to Canada? We don't believe it is the goal of ECRI to make us less competitive globally.

Summary:

We cannot emphasize enough that as a small company, Max-Viz Inc. strives to remain competitive in the Global marketplace of thermal imaging cameras. The Foreign availability for the same thermal imaging camera products is pervasive. If these restrictions are implemented as is, the regulations will severely place Max-Viz, Inc., and all other US companies, at a significant disadvantage to foreign competitors, without adding true regional stability worldwide.

The loss of revenue due to unnecessary regulatory restrictions may be substantial to Max-Viz, Inc. As all 6A003 cameras become more restricted to export, re-export and transfer under the proposed changes, will the United States truly become more secure? We think not.

We believe each of our comments will help government agencies reform the regulations more consistently and with more clarity, without increasing national security risks for the Unites States and without sacrificing Regional Stability worldwide.

Thank you for considering our comments.

PUBLIC SUBMISSION

As of: 7/7/15 1:08 PM
Received: July 06, 2015
Status: Pending_Post
Tracking No. 1jz-8jtx-6665
Comments Due: July 06, 2015
Submission Type: API

Docket: BIS-2015-0016
Revisions to the Export Administration Regulations (EAR): Control of Fire Control, Range Finder, Optical, and Guidance and Control Equipment the President Determines No Longer Warrant Control Under the United States Munitions List (USML)

Comment On: BIS-2015-0016-0001
Export Administration Regulations: Control of Fire Control, Range Finder, Optical, and Guidance and Control Equipment that No Longer Warrant Control under the U.S. Munitions List

Document: BIS-2015-0016-DRAFT-0015
Comment on FR Doc # 2015-10353

Submitter Information

Name: Anthony Rallo
Address:

7 Airport Park Road
East Granby, CT, 06026

Email: acrallo@nufern.com
Phone: (860) 264-2167
Organization: Nufern

General Comment

Hello,

Attached is a .pdf file consisting of Nufern's response to RIN 0694-AF75. The document is a response letter by myself, Anthony Rallo, Esq., Nufern's in-house legal counsel.

Thank you for the opportunity to comment on this draft. If another comment period is afforded--as was suggested during the drafting process--we will contribute again. We are hopeful you find our feedback productive, and that the DoC considers our proposed alterations before publishing the final rule.

Should you require additional information, I will leave my contact information below. Please feel free to reach out at any time.

Sincerely,
Anthony Rallo, Esq.

Attachments

Attachment 1_Nufern Comment to EAR Revision Proposal

July 6, 2015

Regulatory Policy Division
Bureau of Industry and Security
U.S. Department of Commerce
Room 2099B, 14th Street and Pennsylvania Avenue, NW
Washington, DC 20230

RE: RIN 0694-AF75—Public Comment Concerning Revisions the Export Administration Regulations—Control of Fire Control, Range Finder, Optical, and Guidance and Control Equipment the President Determines No Longer Warrant Control Under the United States Munitions List

Two Whom It May Concern:

Thank you for providing this opportunity to comment on the proposed changes to the Export Administration Regulations and the Commerce Control List. We have already submitted a lengthy comment to the Department of State concerning the proposed rewrite of USML Category XII. We have less to say about the EAR proposal, though there are three points we would like to make about macro policy decisions.

First, we do not agree that placing categorical limitations on the STA License Exception for commodities listed on 6A002 and 6A003 is necessary. We also believe the expansive use of STA prohibitions for 600 series items are unnecessary. As a matter of company policy, we do not export items under the STA exception unless the destination qualifies under the STA, we have a strong rapport with the customer, and know how the customer will use the commodity. If the customer provides anything other than conclusive evidence of civil end-use, we opt to apply for a license rather than use the STA. The regulations require as much and most companies have similar policies.

If the destination, user, and use qualify for the STA (according to both the EAR and our company policy), we require the customer to re-certify the intended use, acknowledge the terms of the exception, certify that the customer is the end-user, and agree not to reexport or transfer the commodity to any third party. The customer must also certify that the commodity will not be used for the development of chemical, biological, or nuclear weapons or their delivery systems. Finally, the customer must agree to correspond with the U.S. Government concerning the transaction. This is all in addition to the usual procedures we follow when exporting commodities, such as record keeping and properly affixing relevant classifications, export codes, and destination control statements to all shipping documents.

Since the STA, and the EAR generally, mandate extensive knowledge about the end-user and use before shipping items without licenses (whether under STA, other exceptions, or because no license is required), a rule that categorically prohibits the use of the STA for 'all' commodities, regardless of intended use, under certain categories is over-broad.

Second, the proposed change to the Regional Stability controls is similarly over-broad. It is unclear why a rule that was once concerned with political stability in certain parts of the world now must impose a world-wide licensing requirement for broad categories of commodities. Indeed, the very term 'regional' makes the concept of world-wide application peculiar, and prohibitions against unlicensed sales to even Canada hardly seem justified for dual-use items--especially where trusted customers certify civilian end-uses.

Finally, we are concerned with the breadth of the 600 series generally. As a specific example, I will discuss 7A611x, but this applies to all similar 'catch-alls' promulgated under any category. Quite frankly, 7A611x reads like the previous USML provisions that fail to articulate specific commodities for control. The broad ranges of items and broader ranges of parts/components encompassed by the USML was a large motivator for export reform. Nonetheless, 7A611x creates similar encumbrances.

Admittedly, the ITAR is more stringent than the 600 series, but the restrictions on 600 series items impose heavy licensing and compliance burdens on industry, which may render the commodity shift from the USML to the CCL a mere jurisdictional change that provides little of the promised clarity and relief.

This is, of course, an implementation question, and if the DoC licensing process proves user-friendly and expedient even for 600 series items, then 600 series enumeration mayrender export control compliance more manageable than before. It is worth illustrating the jurisdictional scope of the proposal, however, to discuss whether the breadth is justifiable.

Under 7A611d., navigational gyros and angular rate sensors specially designed for defense articles on either the USML or the 600 series are captured under 7A611 (controlled for NS1, RS1, MT1, AT, and UN). Under 7A611x, all components, parts, accessories, and attachments for anything controlled under 7A611 or USML Category XII are controlled under 7A611. Since gyros and angular rate sensors are themselves components of navigational systems, the 600 series literally controls components, parts, attachments, and accessories of components. The breadth of these controls will impose harsh licensing/compliance rules on manufacturers of micro components that are themselves harmless, but are too technologically sophisticated and systemically unique to be anything other than 'made-to-order,' and therefore specially designed.

Please consider reworking the draft in light of the foregoing. I will provide my contact information below if further correspondence is necessary.

Sincerely,

Anthony Rallo, Esq.

ON Semiconductor Corporation
5005 E. McDowell Road
Phoenix, AZ 85008

DARYL HATANO, Vice President
Government and External Affairs
Direct Line: 408-542-1176

July 6, 2015

Ms. Hillary Hess
Regulatory Policy Division
Bureau of Industry and Security
US Department of Commerce
Room 2099B
14th Street and Pennsylvania Avenue NW
Washington DC 20230

Email: publiccomments@bis.doc.gov

Re: RIN 0694-AF75
Proposed Changes to Category 6 Sensors and Lasers /
Increased Controls for Night Vision Items

Dear Ms. Hess:

ON Semiconductor is a Fortune 1000 company, with over 24,000 employees around the world generating $3.2B in revenue (2014). The company offers a comprehensive portfolio of energy efficient power and signal management, logic, discrete and custom solutions to help design engineers solve their unique design challenges in automotive, communications, computing, consumer, industrial, LED lighting, medical, military/aerospace and power supply applications. One of ON Semiconductor's key product lines, image sensors, accounts for about 19% of revenue. The context for subsequent remarks is this image sensor business.

ON Semiconductor is pleased to provide comments regarding proposed changes to the EAR specific to category 6A002. These comments will pertain to the company's KAE-series of devices, EMCCDs (Electron Multiplication CCDs) presently controlled by the EAR via ECCN 6A002.a.3.g. We recognize that it is the intent of the Departments of Defense, State and Commerce to control items having an ability to image in low light. The proposed regulation's underlying assumption is that the selected parameters of control for charge multiplication focal plane arrays are **resolution** (number of photosensitive elements in the FPA) and **maximum radiant sensitivity** in the 760-900 nm spectral band. However in our experience the performance parameters, as defined, are unable to distinguish commercial devices from military devices or, between an image sensor using EMCCD technology and

one using scientific CMOS (sCMOS) technology to deliver virtually identical or better low light imaging capability. These parameters, as defined, do not capture the lower IR sensitivity exhibited by KAE-series devices relative to sCMOS or GaAS Intensifier Tubes. The net effect of the regulations would be to hamper ON Semiconductor's ability to compete in the non-defense commercial market against foreign suppliers of EMCCD sensors and against any supplier of sCMOS sensors.

Given the rapidly growing commercial applications for low light image sensors and alternative technologies in the market, we urge that EMCCDs remain on the EAR and not be moved to the ITAR.

If EMCCD sensors must be controlled, the performance characteristics should be redefined and keyword definitions clarified in consideration of the competitive environment, and the intended application.

The following comments are provided using the numbering scheme used to highlight issues of particular interest to BIS, as per pages 9-11 of RIN 0694-AF75.

(1) **Potential lack of coverage.**

Wassenaar appears to exclude sCMOS image sensors, known for excellent low light performance, from the regulatory framework applied to EMCCDs.

Category ML15 of the Wassenaar Munitions List (WML, dated 03-25-2015), which describes imaging equipment specially designed for military use, explicitly lists image intensifier tubes (other than first generation). Gen 3 image intensifier tubes, though in no way directly related to KAE-series image sensors in a technological sense, will serve as a benchmark later in this letter. KAE-series image sensors do not appear to be represented in ML15, nor elsewhere in the WML.

The Wassenaar Dual-Use List dated 03-25-2015 contains the following entry:

Note 6.A.2.b.1. does not apply to "monospectral imaging sensors" with a peak response in the wavelength range exceeding 300 nm but not exceeding 900 nm and only incorporating any of the following non-"space-qualified" detectors or non-"space-qualified" "focal plane arrays":
a. Charge Coupled Devices (CCD) not designed or modified to achieve 'charge multiplication'; or
b. Complementary Metal Oxide Semiconductor (CMOS) devices not designed or modified to achieve 'charge multiplication'.

For scientific CMOS image sensors (sCMOS), developed expressly for use in low light applications, there appears to be no need to obtain export licenses. As sCMOS achieves its low light capabilities using techniques other than charge multiplication, it is treated differently—despite performing similarly. More will be presented on the noted inconsistency in subsequent comments below.

(2) **Proposed control items not controlled under Wassenaar or Dual-Use.**

No comments.

(3) **<u>USML and CCL "Bright Line".</u>**

Specifications, as well as performance in the field, show EMCCD and sCMOS image sensors to be comparable and essentially interchangeable. Yet, under the proposed regulations, U.S. exports would be controlled very differently.

Table 1 compares and contrasts two competing products used in low light imaging.

	KAE-02150 *(ON Semiconductor's CCD image sensor)*	sCMOS inage sensor *(designed, manufactured, and marketed by a U.S. subsidiary of a non-U.S. parent company)*
Resolution:	1920 x 1080 FPA	1920 x 1080 FPA
Pixel node:	5.5 micron square	6.5 micron square
Active area:	10.6 mm x 5.9 mm	12.5 mm x 7.0 mm
Charge capacity:	20,000 e-	30,000 e-
Frame rate:	60 fps (mode A); 30 fps (mode B)	100 fps (rolling shutter); 50 fps (global shutter)
Dynamic range:	68 dB (mode A); 86 dB (mode B)	>88 dB
Read noise:	9 e- rms (mode A); ~1 e- rms (mode B)	~1 e- rms
Maximum radiant sensitivity: (in 760-900 nm spectral region)	95 mA/W	233 mA/W

Table 1: Comparison of specifications: KAE-02150 and competing sCMOS image sensor

On the **resolution** performance parameter, the parts are identical. sCMOS is advantaged on maximum radiant sensitivity (760-900 nm), charge capacity (full well), dynamic range, and highest attainable frame rate. The parts are comparable vis-à-vis lowest attainable read noise.

Figure 1 depicts radiant sensitivity (mA/W) for the KAE-02150 and its sCMOS counterpart; the latter's capability far exceeds the former's in the spectral region cited in XII(c)(7) of the proposed U.S. Munitions List (760 nm to 900 nm, labelled "**In Scope**" in Figure 1). The reference curves also make clear that over the "In Scope" wavelengths, Gen 3 GaAs image intensifier tubes (significant from the perspective of night vision goggles) have greater radiant sensitivity than does KAE-02150.

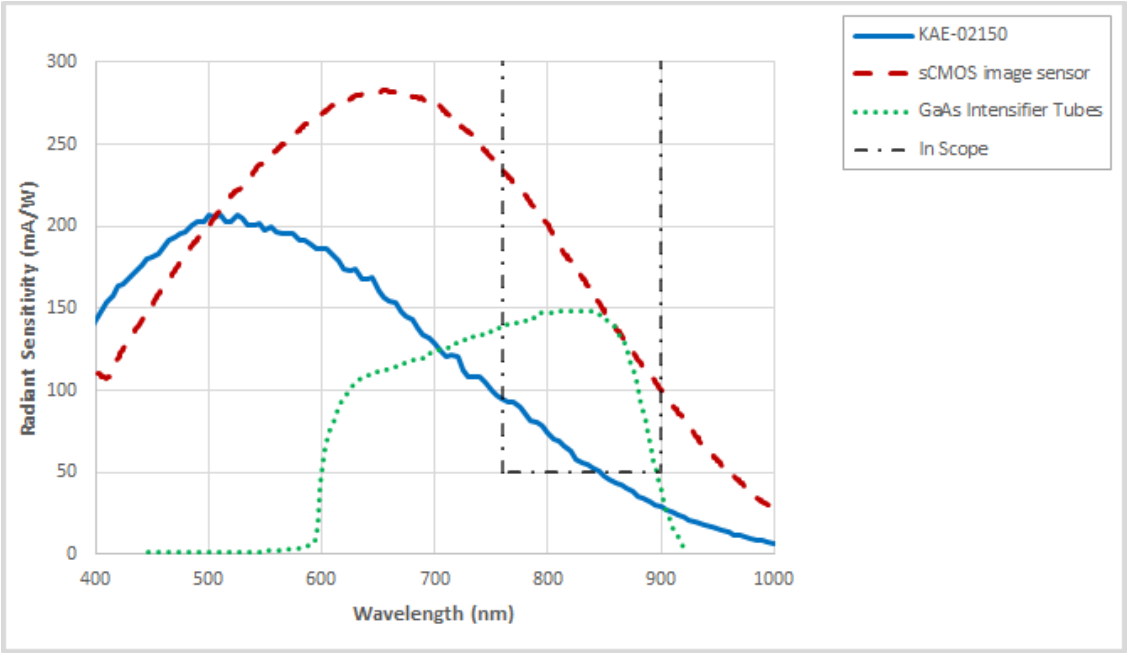

Figure 1: Comparison of radiant sensitivity curves

An analysis of Figure 1 highlights the imprudence of controlling EMCCDs under ITAR while sCMOS remains uncontrolled. Attempting to control both EMCCDs and sCMOS at the semiconductor component level is also problematic, given widespread commercial applications of such sensors as described in Section 4 of this comment, and would run counter to the overall direction of the President's Export Control Initiative.

If the State Department concludes that semiconductor image sensors must be controlled, Figure 1 suggests an alternate performance parameter which would ensure EMCCDs are not disadvantaged and widely available commercial applications of EMCCD and sCMOS are not impacted. In addition to **maximum radiant sensitivity**, the performance parameter presently cited in both the EAR and the ITAR, **average radiant sensitivity** across the spectral region of interest (ROI) could also be considered. Discussing each in turn:

- **Maximum radiant sensitivity** describes a peak value.
    - As regards the benchmark presented by GaAs image intensifier tubes, which correspond to technology used in Gen 3 night vision goggles, a maximum of 100 mA/W could safely be considered. The EAR cites a value of 10 mA/W, while the ITAR locks in on 50 mA/W.
- **Average radiant sensitivity** is calculated across the spectral region of interest.
    - This metric addresses the issue of sustained sensitivity across the spectral ROI. *In the extreme case of a single value of 100 mA/W at 761 nm (which exceeds maxima of both EAR/ITAR), and 0 mA/W across the balance of the region, average radiant sensitivity would successfully discern a virtual lack of IR detection capability.*

Both metrics cited above should be connected with logical operator AND. Thus, a curve which exceeds the **maximum radiant sensitivity** threshold AND exceeds the **average radiant sensitivity** threshold would be a candidate for control under the ITAR. Table 2 summarizes these three metrics for Figure 1 curves. Proposed language to implement this concept will be provided in Section 5 below.

Item	Peak Radiant Sensitivity *(760-900 nm; mA/W)*	Average Radiant Sensitivity *(760-900 nm; mA/W)*	Comment(s)
sCMOS image sensor	233	168	High sensitivity
GaAs IIT	149	130	Reference
KAE-02150	95	60	Low sensitivity

Table 2: Calculated values for Figure 1 traces

In addition to the quantitative metrics of Table 1, a qualitative (subjective) assessment could be incorporated. That is, KAE-02150 exhibits radiant sensitivity of less than 50 mA/W from 850-900 nm. And, as noted previously, it falls well below Gen 3 IIT performance throughout the ROI. The GaAs IIT benchmark could be useful in establishing a limit for average radiant sensitivity.

The term "avalanche detector elements" used in the State Department proposal for USML Category XII (c)(7) and XII (c)(8) ("and avalanche detector elements therefor") requires definition. The pixel (detector element) of a KAE-02150 image sensor is identical to that for KAI-02150, a COTS EAR99 item which does not use an avalanche method or phenomenon. KAE-02150's "charge multiplication" occurs in the readout structure, not the pixel.

(4) **Examples of proposed control items that are in normal commercial use.**

KAE-02150 has been licensed for, and has been designed into, a number of commercial uses, including:

- Automotive (vehicles): onboard day/night camera for road safety
- Intelligent Traffic Systems: electronic toll
- Medical: digital pathology
- Scientific: astronomy; microscopy
- Surveillance: banks; parking lots

Low light image sensor applications, including both CCD and CMOS technologies, are high-growth markets. Commercial volumes are expected to increase rapidly as costs decrease over time and advances in complementary technologies, such as the "Internet of Things" and image recognition software, increase the value of sensors. ON Semiconductor has both CCD and CMOS image sensor technologies addressing a range of light intensities, cost points, image speeds, pixel densities, and other attributes important to its customers. The company's ability to provide a range of technologies, including EMCCD, allows it to better serve its customers as the applications for image sensing proliferate.

Commercial use of EMCCDs would be severely impacted by proposed changes in USML Category XII. Export-oriented non-defense commercial applications make up 48% of the business by customer count and 44% by revenue. Regional marketing staff estimate 90% of this would be lost under the proposed regulations (customers have cited an unwillingness to apply for ITAR export licenses). For KAE-02150, economic loss would

be measured in tens of millions of dollars across the part's life cycle. An expansion of the KAE-series into a family of products would multiply losses resulting from ITAR coverage considerably.

The proposed changes in USML Category XII will have the effect of protecting foreign manufacturers of parts which would, if made in the U.S., be subjected to USML Category XII licensing requirements. Table 3 presents a pair of commercially available EMCCDs produced and sold by a non-U.S. company. Foreign suppliers of EMCCDs would be free to compete unencumbered if ON Semiconductor were not able to export due to the proposed regulatory changes.

Item	# Horizontal Pixels	# Vertical Pixels	Pixel Node *(microns)*	Comment(s)
EMCCD **A**	1600	1600	16	• Has 1,600 elements in both dimensions • 2.6 megapixels • Primary application: scientific
EMCCD **B**	4096	4096	12	• Has greater than 1,600 elements in both dimensions • 16.8 megapixels • Primary application: astronomy

Table 3: High resolution EMCCDs not subject to proposed USML Category XII

(5) **<u>Parameters or characteristics that cover items exclusively or primarily in military use</u>**.

Current parameters of control include "charge multiplication", resolution (number of pixels), maximum radiant sensitivity (in the 760 nm to 900 nm spectral range), and the use of avalanche detector elements. Per section (3) above, incorporation of an additional metric—**average radiant sensitivity** (in the 760 nm to 900 nm spectral range)—is urged. Judging by capability of the sCMOS device (an EAR99 item, according to the U.S.-based designer/manufacturer/seller), limits shown in Table 4 make sense from the perspective of consistency.

Metric	Suggested Limit	Engineering Units	Comment(s)
Resolution	None	megapixels	Non-U.S. EMCCD products are available in resolutions ranging from sub-megapixel to 1 Mp, 2 Mp, …, all the way up to 16 Mp.
Maximum radiant sensitivity (760 nm to 900 nm)	250	mA/W	Acknowledges current capability of sCMOS item
Average radiant sensitivity (760 nm to 900 nm)	175	mA/W	Acknowledges current capability of sCMOS item

Table 4: Proposed limits for metrics suggested for regulatory use

As discussed in previous sections, and in acknowledgment of the rapidly growing commercial applications for low light image sensors and alternative technologies in the marketplace, EMCCDs should remain on the EAR and not be moved to the ITAR. However, if the State Department concludes that charge multiplication focal plane arrays must be referenced in the ITAR, and the Department chooses **to synchronize its proposed Category XII language with the export status of sCMOS image sensors, <u>the suggested limits (Table 4) should be incorporated into USML XII(c)(7) as follows:</u>**

Current Department of State proposed text of USML XII(c)(7):
"Charge multiplication focal plane arrays having greater than 1,600 elements in any dimension and having a maximum radiant sensitivity exceeding 50 mA/W for any wavelength exceeding 760 nm but not exceeding 900 nm, and avalanche detectors therefor;"

Alternative proposed text of USML XII(c)(7):
"Focal plane arrays having a maximum radiant sensitivity exceeding 250 mA/W for any wavelength exceeding 760 nm but not exceeding 900 nm, and average radiant sensitivity exceeding 175 mA/W within the same spectral region of interest."

(6) **<u>Commercial items covered under Multilateral controls.</u>**

No comments.

(7) **Encapsulated IRFPA.**

The concept of a "Bright Line" between the USML and the CCL is diminished by the proposed concept of "bare" IRFPA being controlled by the ITAR, while a permanently encapsulated sensor assembly is controlled under the EAR. A permanent encapsulated sensor assembly is defined as: *"(e.g., sealed enclosure, vacuum package) [that] prevents direct access to the IRFPA, disassembly of the sensor assembly, and removal of the IRFPA without destruction or damage to the IRFPA."* Therefore goods that are in the midst of manufacture are subject to the ITAR, while goods that are in completed state are no longer subject to the ITAR. This introduces a previously unknown and unnecessarily complicated burden to the manufacturing process since a commercial part will change from the ITAR to the EAR.

(8) **<u>Expansion of license requirements and removal of license exceptions.</u>**

No comments.

(9) **<u>Impact of new license requirements for exports to Canada.</u>**

Canadian sales comprise ~5% of KAE-series business. Significant growth in that portion is anticipated. 60% of Canadian sales are in the sphere of normal commercial use. Extension of current export licensing requirements, such that an EAR-oriented license is required, would impose a degree of expense and consume time. Nonetheless, after a "break-in" period, the market would adapt. Should an ITAR-oriented license be required, regional marketing staff project a steep decline in sales.

The proposed regulations will have the effect of severely limiting U.S. participation in civil applications internationally. A U.S.-based manufacturer will see risks rise and rewards diminish, setting the stage for a loss of competitiveness. With KAE-series business plans under pressure, ON Semiconductor will lose not only the ability to grow and create jobs, but could find that the KAE-series business is not viable--leading to the closure of this product line. This would hurt all customers, those engaged in normal commercial use as well as those looking to improve defense preparedness.

ON Semiconductor believes current export controls on EMCCDs strike the right balance between normal commercial use and national security. Further, it would seem items having similar capabilities be evaluated and controlled in a consistent fashion.

ON Semiconductor is pleased to be able to provide comments regarding the proposed changes that will directly and negatively impact ON Semiconductor. You should feel free to contact either (Daryl.Hatano@onsemi.com Tel: +1 408 542 1176), or John Frenett (John.Frenett@onsemi.com Tel: +1 585 784 5504).

Sincerely,

Daryl G. Hatano
Vice President, Government and External Affairs
ON Semiconductor

The Optical Society

Elizabeth A. Rogan
Chief Executive Officer

DATE: July 6, 2015

TO: Dennis Krepp, Director, Office of National Security and Technology Transfer Controls, Bureau of Industry and Security, Department of Commerce, and Mr. C. Edward Peartree, Director, Office of Defense Trade Controls Policy, Department of State

FROM: The Optical Society (OSA)

RE: Department of Commerce Regulation Identifier Number (RIN) 0694-AF75 / Department of State RIN 1400-AD32

To whom it may concern:

We are submitting this response to the United States Munitions List (USML) Category XII Proposed Rule Change that was published in the Federal Register on May 5, 2015. The Optical Society (OSA) is the leading professional association representing the optics and photonics technology sectors. The United States Munitions List (USML) Category XII encompasses fire control, range finder, optical and guidance and control equipment that the United States considers critical to national security. The goal of the Category XII proposed rule change was to move dual-use items with both military and commercial applications from the State Department USML list to the less restrictive Commerce Control List (CCL) list. This proposed goal was intended to eliminate regulations and jurisdictional classifications confusion between the USML and CCL.

OSA members produce and develop technologies included in Category XII classification and believe that this rule change increases jurisdictional confusion related to technology classification between the USML and CCL. OSA membership has grave concerns about the implications of this proposed rule were it to go into effect as it would harm the industrial competitiveness of the U.S. optics and photonics industry. The Export Control Reform Initiative was intended to increase interoperability with NATO and other close allies, reduce the current incentives for companies in non-embargoed countries to design out or avoid U.S. origin content and allow the United States Government to focus its resources on items of greater concern. The Optical Society believes these objectives aren't realized in the proposed category XII rule change.

2010 Massachusetts Avenue, NW • Washington, DC 20036-1012 USA
Tel: +1.202.416.1484 • Fax: +1.202.416.1407 • erogan@osa.org
www.osa.org

Founded in 1916, OSA is home to accomplished science, engineering, and business leaders from all over the world. Through world-renowned publications, meetings, and membership programs, OSA provides quality information and inspiring interactions that power achievements in the science of light. OSA represents over 19,000 individual members and 265 businesses. OSA's mission is to promote the generation, application and archiving of knowledge in optics and photonics and to disseminate this knowledge worldwide. The purposes of the Society are scientific, technical and educational. OSA's commitment to excellence and long-term learning is the driving force behind all its initiatives.

President Obama's Export Control Reform (ECR) that began in 2009 was intended to better protect America's most sensitive defense technologies, while at the same time reduce unnecessary restrictions on exports of less sensitive items. This Category XII proposed rule change, rather than reduce unnecessary restrictions on exports of less sensitive items, instead is more complex than the current rule. The proposal would hurt the U.S. optics and photonics industry, including OSA members, in competing with foreign businesses.

The Optical Society represents many small companies in the optics and photonics technology sector that have recently spun off from university-based research and development applications. As with any industry, these small innovative companies represent future technology growth areas and are positioned to grow into larger entities and lead the county and world in commercializing and manufacturing optical and photonics-based technologies in this fast-growing global industry expected to total $47 billion in 2015. Many of these small companies are able to commercialize dual use technologies with the support of federal government research and development programs such as Small Business Innovative Research grants.

Under the proposed rule changes to Category XII these companies in their infancy will be severely disadvantaged by utilizing Department of Defense federal research and development grant funds that will classify the technology they are developing/commercializing as a defense article to be listed on the USML and controlled by ITAR regardless of whether the technology is a sensitive military system or intended also for dual use civilian applications. The Optical Society believes this issue needs to be addressed and revised before any final Category XII rule changes are implemented.

Many foreign competitors advertise themselves as "ITAR-free" as a way to stress the advantage they have over U.S. businesses that face far more restrictive export regulations. As a result, U.S. businesses suffer, and this would only continue in future years if the Category XII proposed rule was implemented. While the goal of Export Control Reform was to build taller walls around fewer controlled items, Category XII actually expands regulatory reach to place more items on the more restrictive USML.

The Optical Society believes that the United States should align its export controls more closely to that of the Wassenaar Agreement. The arrangement is an export control agreement between 41 countries, including the United States, that meet annually to discuss and agree which military and dual-use items should be controlled and which should not. Countries in the agreement then create their own regulations to decide how to best control the agreed upon items. The proposed rules would create a far more restrictive export control system in the United States than what is provided for under the Wassenaar agreement. In turn, this would severely curtail and hurt U.S. competitiveness when a similar product can be purchased from another country without the same restrictions.

The Export Control Reform Initiative also intended to create a simple regulatory definition of "specially designed" criteria. "Specially designed" criteria was defined by the U.S. departments of State and

Commerce in 2013 to speed up the process of determining whether an item is designed for military applications or not. The criteria was then applied to the USML as categories were revised for the Export Control Reform Initiative. OSA is concerned that the Category XII proposed rule does not effectively use the "specially designed" criteria to place products with commercial applications on the CCL, instead leaving them on the more restrictive USML and placing a higher regulatory burden on industry.
OSA is concerned that the Category XII proposed rule will place significant burdens on U.S. businesses competing with foreign companies. Under the proposed rule, companies might not be aware that an item they are developing now falls under the USML and not the CCL, potentially exposing the company to serious penalties. The proposed rule has widespread implications, as it could affect many U.S. companies' export posture in a negative way related to utilizing Department of Defense funding for research, development and manufacturing optical and photonic technologies independent of utilizing Department of Defense research funding within the United States. The Export Control Reform Initiative was designed to streamline the export process and remove burdensome controls, but instead it creates more confusion. Companies, especially smaller ones without in-house legal counsel, may be hesitant to develop new technologies if export rules are too complex to understand.

The Optical Society, on behalf of its membership, asks that the proposed Category XII rule changes be revised and developed in coordination with additional input from industry, government and university stakeholders. Category XII should implement the "specially designed" criteria to ensure that commercial products are placed on the less restrictive Commerce Control List and not the U.S. Munitions List. Doing so would ensure that the United States is meeting both national security needs as well as enabling industry to better understand regulatory provisions and compete in the global marketplace.

Sincerely,

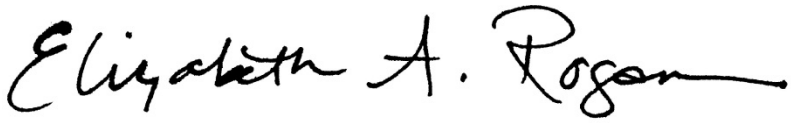

Elizabeth Rogan
CEO, The Optical Society

PUBLIC SUBMISSION

As of: 6/25/15 2:15 PM
Received: June 12, 2015
Status: Pending_Post
Tracking No. 1jz-8jdr-qrbv
Comments Due: July 06, 2015
Submission Type: API

Docket: BIS-2015-0016
Revisions to the Export Administration Regulations (EAR): Control of Fire Control, Range Finder, Optical, and Guidance and Control Equipment the President Determines No Longer Warrant Control Under the United States Munitions List (USML)

Comment On: BIS-2015-0016-0001
Export Administration Regulations: Control of Fire Control, Range Finder, Optical, and Guidance and Control Equipment that No Longer Warrant Control under the U.S. Munitions List

Document: BIS-2015-0016-DRAFT-0003
Comment on FR Doc # 2015-10353

Submitter Information

Name: Rick Plympton
Address:
6367 Dean Parkway
Ontario, NY, 14519
Email: rick@optimaxsi.com
Phone: 585 265 1020 x 206
Fax: 585 265 1033
Organization: Optimax Systems, Inc.

General Comment

Submission by Rick Plympton, CEO Optimax Systems, Inc. Optimax is a precision lens manufacturer located in upstate NY, founded in 1991, employing about 250 people.

****** The area of concern is with regard to restrictions for optical components and lasers for lithography equipment as cited in proposed para's #20 and 21 copied below. At a minimum this change would require submission for license for each purchase order of optics (optical mirrors or `aspheric optical elements') for lithography equipment that are shipping outside US borders. If the intent is to prevent shipment of optics (optical mirrors or `aspheric optical elements') for lithography systems, this will jeopardize the opportunity for Optimax future business development estimated to be on the order of $10,000,000 annually. A suggested alternative would be to eliminate any reference to lithography equipment or to write the regulation with respect to lithography systems of interest instead of restricting all optical components that are

'optical mirrors or `aspheric optical elements.'
In addition, it would be helpful to understand how to direct our foreign customers to give them consideration for inclusion on the Bureau of Industry and Security Supplement No. 7 to Part 748 - AUTHORIZATION VALIDATED END-USER (VEU): LIST OF VALIDATED END-USERS, RESPECTIVE ITEMS ELIGIBLE FOR EXPORT, REEXPORT AND TRANSFER, AND ELIGIBLE DESTINATIONS
****

Revisions to the Export Administration Regulations (EAR): Control of Fire Control, Range Finder, Optical, and Guidance and Control Equipment the President Determines No Longer Warrant Control Under the United States Munitions List (USML)

A Proposed Rule by the Industry and Security Bureau on 05/05/2015

20. In Supplement No. 1 to part 774, Category 6, ECCN 6A004 is amended by revising the Related Controls paragraph in the List of Items Controlled section to read as follows:
6A004Optical equipment and components, as follows (see List of Items Controlled).
Related Controls: (1) For optical mirrors or `aspheric optical elements' specially designed for lithography equipment, see ECCN 3B001. (2) See USML Category XII(c) for gimbals subject to the ITAR. (3) See ECCN 6A615.b for gimbals containing a camera payload operating exclusively in the visible spectrum (i.e., 400 nm to 760 nm). (4) Space qualified components for optical systems defined in 6A004.c and optical control equipment defined in 6A004.d.1 are subject to the ITAR. (5) See also 6A994.

21. In Supplement No. 1 to part 774, Category 6, ECCN 6A005 is amended by:
a. Revising the Related Controls paragraph in the List of Items Controlled section; and
b. Adding Notes to paragraphs c.3.b, d.1.a.2, d.1.b.3, d.1.d.1.d, d.1.d.2.d, and d.1.d.3.b in the Items paragraph of the List of Items Controlled section, to read as follows:
6A005Lasers, components and optical equipment, as follows (see List of Items Controlled), excluding items that are subject to the export licensing authority of the Nuclear Regulatory Commission (see 10 CFR part 110).
Related Controls: (1) See ECCN 6D001 for software for items controlled under this entry. (2) See ECCNs 6E001 (development), 6E002 (production), and 6E201 (use) for technology for items controlled under this entry. (3) Also see ECCNs 6A205 and 6A995. (4) See ECCN 3B001 for excimer lasers specially designed for lithography equipment. (5) Lasers specially designed or prepared for use in isotope separation are subject to the export licensing authority of the Nuclear Regulatory Commission (see 10 CFR part 110). (6) See USML Category XII(b)(10) for certain tunable semiconductor lasers. (7) See USML Category XII(b)(11) for certain non-tunable single transverse mode semiconductor lasers. (8) See USML Category XII(b)(12) for certain non-tunable multiple transverse mode semiconductor lasers. (9) See USML Category XII(b)(13) for certain laser stacked arrays. (10) See USML Category XII(b)(9) for certain lasers for electronic combat systems controlled in USML Category XI. (11) See USML Category XII (b)(14) for developmental laser and laser systems funded by the Department of Defense. (12) See USML Category XVIII for certain laser-based directed energy weapon systems, equipment, and components.

PUBLIC SUBMISSION

As of: 6/29/15 8:45 AM
Received: June 26, 2015
Status: Pending_Post
Tracking No. 1jz-8jn3-5ee7
Comments Due: July 06, 2015
Submission Type: API

Docket: BIS-2015-0016
Revisions to the Export Administration Regulations (EAR): Control of Fire Control, Range Finder, Optical, and Guidance and Control Equipment the President Determines No Longer Warrant Control Under the United States Munitions List (USML)

Comment On: BIS-2015-0016-0001
Export Administration Regulations: Control of Fire Control, Range Finder, Optical, and Guidance and Control Equipment that No Longer Warrant Control under the U.S. Munitions List

Document: BIS-2015-0016-DRAFT-0006
Comment on FR Doc # 2015-10353

Submitter Information

Name: Martin Ettenberg
Address:
9 Deer Park Dr.
Suite J-5
Monmouth Jct., NJ, 08852
Email: martin.ettenberg@princetonirtech.com
Phone: 609 917 3379
Fax: 609 917-3381
Organization: Princeton Infrared Technologies, Inc.

General Comment

see attachment

Attachments

PIRT response to USML proposal final

Princeton
Infrared Technologies

June 23, 2015

Via email DDTCResponseTeam@state.gov
Publiccomments@bis.doc.gov

Re: ITAR Amendment - Category XII; RIN 1400–AD32; Comments on Notice of Proposed Rule Making.

ATTN: Mr. Ed Peartree, Director, Office of Defense Trade Controls Policy

Dear Sir,

Princeton Infrared Technologies, Inc. ("Princeton IR") submits the following comments on the proposed rule changes to the U.S. Munitions List, Category XII for your consideration.

Background

Princeton IR was founded in December 2013 to develop and manufacture infrared detector solutions, particularly one-dimensional indium gallium arsenide ("InGaAs") focal plane arrays, for various commercial applications. Commercial applications of Princeton IR's products include spectroscopy for material inspection, machine vision in factories for glass inspection, and monitoring dense wavelength division multiplexing telecommunication networks.

Overview

Princeton IR believes the proposed regulations would have a significant negative impact on the industry in the U.S. by promoting sales from international competitors. The increase in foreign sales would enable the international companies to invest in and develop new products, as well as manufacturing efficiencies that would ultimately lead to a decline in the technological progress at home. This would have potentially catastrophic consequences for the domestic industry, similar to those suffered by the U.S. satellite industry with the transition of satellite controls from the Commerce Department to the State Department.

The destruction of the domestic IR industry would have negative economic and national security consequences. Foreign competition would likely leap-frog over domestic production both in quality and cost, making better, cheaper product available outside the U.S. and increasing costs for U.S. defense contractors.

Princeton
Infrared Technologies

These costs would come with little to no benefit to U.S. national security to offset the costs. The types of products on which the proposed regulations tighten controls are already available from foreign competitors. Therefore, the proposed restrictions would not prevent parties outside the U.S. from obtaining these products. They would simply push those buyers to non-U.S. manufacturers, strengthening foreign competition and removing U.S. visibility into sales of IR products – visibility that the U.S. Government would have if the products in question were subject to the jurisdiction (and licensing requirements) of the Export Administration Regulations where many of these products currently reside.

For these reasons, discussed in further detail below, we respectfully submit that the proposed rules are counter to the intended goals of Export Control Reform to place higher walls around fewer items and to strengthen U.S. industries that support our national security with items that warrant export control but which are not appropriately treated as "defense articles." For these reasons, we strenuously object to the proposed rule changes in their current form and ask that the agencies involved submit modified proposals as soon as possible.

Discussion

This response will focus on shortwave infrared detectors (900nm to 2600nm) which the proposed rule would place under Category XII(c) of the USML - Infrared Focal Plane Arrays (IRFPAs). The IRFPAs discussed are detectors that are currently not purchased by the U.S. military, available overseas and many of them have historically only been subject to EAR99 regulations.

Princeton IR believes the rules as proposed are overbroad and could potentially cover commercial telecommunications and fiber optics devices wholly unrelated to the purpose of the USML restrictions. Princeton IR also believes that, instead of placing more items in the wavelength band under the USML control, the revisions should be focused on building higher walls around fewer products. This comment will outline the disadvantages of the proposed rule and suggest alternatives, when applicable, to address these concerns.

1. Proposed Paragraph (c)(2) - IRFPAs

The proposed paragraph XII(c)(2) would bring photon detectors in the range of 900-30000 nm, not integrated in a permanent encapsulated sensor assembly, onto the USML. The proposed regulation does not even restrict the regulation to photon detectors attached to an amplifier. As a result, every fiber optic telecommunication receiver currently in production would be placed on the USML subject to the ITAR.

For example, InGaAs p-i-n and APD (avalanche photodiodes), which can be packaged or unpackaged in TO cans, would both qualify under the "permanently encapsulated sensor

Princeton
Infrared Technologies

assemblies" category. These photon detectors are readily available from manufacturers in China, but similar products would be governed by the ITAR under the proposed USML once they are brought into the United States.

The following table contains a few examples of devices that are readily available now, but which would be covered by the proposed rule:

Device Name	URL
InGaAs PIN Photodiode with Large Photosensitive Area Chip-on-Carrier	http://welcome.gofoton.com/product/ingaas-pin-photodiode-with-large-photosensitive-area-chip-on-carrier/
High Speed InGaAs Photodiodes	http://www.gpd-ir.com/high_speed.html
Simple InGaAs photodiode array without packages	http://www.alibaba.com/product-detail/Optoelectronic-chip-integrated-circuits-ingaas-pin_1783007100.html?s=p
Short 4x1 array on InGaAs photon detectors that can be repeated many times to form a 3x4 array for fiber ribbons	http://www.albisopto.com/albis_product/pdcaxx-32-sc/
12-channel optical receiver used in Datacom and telecom	http://www.avagotech.com/pages/en/fiber_optics/parallel_optics/12-channel_parallel_optics/afbr-83pdz/
45 element arrays of receivers	http://www.a3pics.com/a_spec.htm

Furthermore, the proposed definition of "permanent encapsulated sensor assembl[ies]" would encompass Short Wave Infrared ("SWIR") sensors. SWIR sensors are made from InGaAs and are able to withstand a wide range of temperatures, from -120° to 80°C. Sensor Unlimited's (United Technologies) 256, 512 and 1024 element linear arrays have been shown to operate at temperatures as high as 80°C with 80% humidity meeting Telcordia specifications. These devices are used to monitor dense wavelength division multiplexing ("DWDM") in fiber optic telecommunication systems across the world.

SWIR sensors that are not hermetically sealed provide a beneficial low-cost option to system manufacturers. Without the packaging, system manufacturers are able to integrate optics as close to the sensors are possible. Some applications of non-sealed SWIR sensors include field portable spectroscopy, hand held Raman systems, optical coherence tomography (medical imaging) and scientific spectroscopy. Sometimes, the sensors are placed in hermitically sealed enclosures to protect the device from dust, fingerprints, ESD, or to enable the device to work with thermoelectric coolers. Even when the devices are sealed, the seals currently in use can easily be removed without effecting the sensors' operation. These sensors are able to work as easily in a vacuum or in nitrogen as in the open air.

Based on the currently proposed language, the proposed regulation would require sensors to "self-destruct" when the seals are opened. Not only is this requirement challenging from an engineering perspective, it would also be cost-prohibitive to design such a device. Self-destruction also fundamentally defeats the SWIR sensors' unique advantage of operating without hermetic seals. Working without seals enables these sensors to be smaller, use less power, and cost less than HgCdTe, Ge, or InSb sensors.

In short, the proposed regulation would unnecessarily regulate these commercially available and commercially used sensors, causing a significant increase in the cost of these devices in the U.S. As a result, companies would turn to foreign providers, ultimately hindering progress in the development and improvement of technology at home.

2. **Proposed Paragraph (c)(3) – One-Dimensional Photon Detector IRFPAs**

Princeton IR is unaware of any military system, anywhere in the world, that uses a one-dimensional photodetector array in the SWIR band (900-2600nm). Thus, Princeton IR believes that this proposed paragraph should be removed in its entirety and linear arrays should continue to be controlled as EAR99. Further, we believe that the distinction between square pixels and tall pixels should also be removed from the CCL list, such that SWIR products using tall or square pixels should fall within the EAR99 classification.

Princeton Infrared Technologies

First, it is important to note that many telecommunication detectors are manufactured in arrays called linear focal plane arrays fall under this section. Since these arrays are never packaged, the detectors would be subject to significantly heightened controls, with no national security benefit. The array sizes of 1024 elements and 2048 elements are currently available from foreign suppliers and have been sold for years in the U.S. and around the world.

The following table contains a few examples of companies that sell these types of arrays:

Device Name	URL
12 channel 10Gb/s detector array (Singapore)	http://www.avagotech.com/pages/en/fiber_optics/parallel_optics/12-channel_parallel_optics/afbr-83pdz/
4x1 array (Switzerland)	http://www.albisopto.com/albis_product/pdcaxx-32-sc/
256x1, 512x 1, 1024x1 and 2048x1 on pitches from 50um to 10um (USA)	http://www.sensorsinc.com/products/detail/le-series http://www.sensorsinc.com/products/detail/gl2048-r-ingaas-linescan-camera
512x1, 1024x1 and 2048x1 (Belgium)	http://www.sinfrared.com/en/infrared_camera/detector_arrays_for_infrared_linescan_imaging_and_spectroscopy_applications/xlin_detector_series.asp
Camera systems using the arrays (Belgium)	http://www.sinfrared.com/en/infrared_camera/swir_-_short_wave_infrared_cameras/lynx-gige_-_high_resolution_high_speed_uncooled_swir_gige_line-scan_camera.asp
1024 on 25um pitch (Japan)	http://www.hamamatsu.com/us/en/product/category/3100/4005/4208/4121/G10768-1024DB/index.html
256 element arrays (China)	http://en.cnki.com.cn/Article_en/CJFDTOTAL-JGHW200611007.htm http://www.medsci.cn/sci/show_paper.asp?id=2608159269

The examples above are only used in commercial applications.[1]

Second, we believe that most of the linear array sensors in this band were developed using private funding. Based on our research, we believe that there has been no U.S. Government funding of linear arrays in this wavelength band in **over 15 years**. With no Defense Department financial interest in the technology, it is highly unlikely that the U.S. military is currently deploying, or is interested in deploying, a one-dimensional array in the future. These are commercial technologies.

[1] There are systems that are TDI (time domain integration), but TDI systems are made by adding multiple linear array elements together, which differentiates them from pure one-dimensional arrays.

Princeton Infrared Technologies

Requiring arrays to be less than 640 elements appears to be unnecessarily restrictive. As discussed above, 1024 elements and 2048 elements are currently available worldwide and, in the U.S., the linear arrays are classified as EAR99 with tall pixels. The detectors are listed on the Wassenaar dual-use list as 6(A)(2)(a)(3)(d)(2). In both regulations, the number of pixels has never mattered. Thus, the new requirement would greatly increase the number of licenses by essentially requiring many DWDM monitors to have a license.

An ITAR licensing requirement would create a significant disadvantage to U.S. producers, again with no gain in national security, because it would prohibit some sales and would create delays in deploying new fiber optic systems. Licenses would be required by every manufacturer and purchaser of DWDM. Companies that design DWDM systems generally ship in the range of 1,000 - 10,000 at a time, all of which would require licenses for each device. Optical Coherence Tomography is in development using InGaAs linear arrays of 1024 and 2048 elements. These systems will be deployed to doctor's offices and hospitals on the order of 1000s. Furthermore, any doctor's offices or university laboratories that use the technology would need to obtain a number of licenses for their systems. These licensing requirements are both burdensome and unnecessary in this field.

Third, these controls are unnecessary, because turning commercial linear arrays into a military night vision system with scanning mirrors is not even technically feasible. A true one-dimensional array (not TDI) would not be capable of night vision imaging or laser spotting for several reasons:

1. The scan rate to create a 2D image would be too limited making it difficult to image at night.
2. The scan rate for high resolution would be too low for mobility.
3. A scanning system would have a limited frame rate. Thus, imaging a short pulse laser would be close to impossible to do on a regular basis. Many military systems require a snapshot exposure—not a rolling mode exposure—because otherwise one would miss the laser pulses. In comparison to rolling mode exposure, line arrays are even slower.
4. It is difficult to build a traditional 2D imaging system with these arrays. The only way to create a 2D image is to integrate a scanning mirror. To do so, one must run the array quickly while the mirror scans the linear array across the scene. Alternatively, the array must be placed on a satellite or moving platform which creates a scan underneath the array.

To illustrate the complications of using linear arrays in night vision applications, we will describe the process using the Xenics linear array from above. The Xenics array can output 10klines/s at 2048 resolution. If one wanted a 2048x2048 image from the array, then one could only make video at <5 Hz due to the line rate. This line rate is too slow for any

military application, 9Hz cameras are already on the Wassenaar dual use list. Integration times for any given pixel would be 97us which is also too small for night vision imaging. Two-dimensional arrays in this wavelength band for night vision integrate for 16-33ms which is >160x longer than the Xenics 1D scanning system. The 2D imager requires the 33ms for ¼ moon imaging with a 15x15um pixel at <35e- of noise. This linear array has a smaller pixel ratio, 12x12um, which means each linear array pixel captures 50% less light than the 2D imager. Altogether, the linear array pixel would capture 320x fewer photons per pixel than the 2D array. Therefore, this linear array scanning camera system would only be able to work in the daytime—assuming the array has 35e- of noise. The linear array actually has a 600e- **noise floor**. Even limiting the field of view and creating a 2048x1024 scene would only increase the frame rate to ~10Hz with the total signal to noise ratio of >5400x less than the current 2D imagers which only image to ¼ moon. As a result, these linear arrays could never be used as a night vision imager.

For another example, Sensors Unlimited's 1024 linear array on 25um pitch provides a higher line rate of 46klines/s. One could form a 1024x1024 image with a 44Hz frame rate with each pixel having an integration time of 20us. While we would have a faster frame rate, the cost would be 1000x less integration time from what a 2D imager could achieve (33ms integration times). Even cutting the frame rate to 10Hz only gives an increase of a factor of 4 in integration time. With this integration time, the system would not even be able to work at dusk let along night. Thus, the physics does not allow linear arrays in this wavelength band to be used as night vision devices. The scanning alone reduces the integration time too much. If the linear arrays had 1e- noise levels, the signal to noise ratio would be increased by a factor of 35, which is still not enough to allow the array to be used at night. This linear array has an SNR of 3200x less than an equivalent 1280x1024 array on 15um pitch which images at ¼ moon. This would make this system barely able to image at dusk let alone at night. This is the exact reason why almost every LWIR and MWIR cooled scanning thermal imager in the USML arsenal is being replaced by 2D arrays.

In addition, linear arrays cannot be used to create scanning systems to spot laser designators or rangefinders. To elaborate, we begin by assuming the scanning system is making a 2048x2048 image. If the laser is firing at 15Hz, the pulse would occur 3x during one frame of scanning with a 5Hz frame rate. The laser pulse would be <100ns in pulse duration and the integration time of each line would be 0.1ms. We can only image one line at time with a scanning system. During the frame time of 5Hz, the pulse occurs 3 times in the same spot (assuming a 16Hz laser). The line is only on 1/2048 of the frame time. Thus, in this scenario there is only a **0.15%** chance of catching the laser pulse. It would be nearly impossible to trace laser beams back to their source with this type of scanning system, in fact, most of the time; the system would not even see the pulse.

Even using a faster Sensors Unlimited array, the laser pulse would occur approximately once every three frames. Sensors Unlimited Array allows a 44Hz frame rate and the pulse

rep rate is 15Hz. Since the short pulse is less than one line time, the chance of catching that line time is 1 in 1024 or **0.09%** and would only occur once every three frames. The system would not be effective in capturing laser pulses.

Thus, to use the arrays, one would need to design a sophisticated system with scanning mirrors, a stabilization platform and software to reassemble the information to produce the image. The stabilization platform would require significant resources and time to develop. It would actually be much simpler for users to get a high sensitivity visible silicon sensor with no coatings or coating optimized for 1.06um to spot lasers. These sensors are readily available worldwide at high or low resolution and are incredibly inexpensive:

- http://www.lumenera.com/resources/documents/datasheets/industrial/Lt225-datasheet.pdf
- http://www.lumenera.com/resources/documents/datasheets/microscopy/infinity3-3URF-datasheet.pdf

Finally, the differentiation between square linear array pixels and rectangular linear array pixels needs to be removed from the CCL. While tall pixels can be used to create 2D images, they are blurry. To sharpen the image, users may place an aperture in the optical system to transform taller rectangular pixels into square pixels. Placing an aperture would greatly increase the cost of the system but does not help in protecting any soldiers. Thus, this rule is forcing users to apply greater image processing to tall pixels by unnecessarily requiring apertures in their optical systems. It is much easier to instead buy square pixel systems from overseas. As a result, the differentiation does not add anything to the regulation and should be removed.

Also, one-dimensional arrays are categorized based on the number of pixels (640 pixels) and detection range >900nm and <30,000nm. This is an inappropriate and seemingly random specification, and the proposed regulation does not indicate why these ranges would have a military application—especially since one-dimensional arrays in the range of 900-1700nm are not currently used in any deployed military systems. Many of the linear arrays also have prior Commodity Jurisdiction determinations that classify them as EAR99. Globally, these products are on the Wassenaar dual-use list. These linear arrays and linescan cameras have been used in semiconductor inspection, glass inspection, spectroscopy, and many other machine vision applications. The proposed changes would fundamentally change the business by forcing builders of these systems to use foreign made InGaAs linear arrays, negatively impacting U.S. companies.

Princeton IR has also been developing readout integrated circuits ("ROIC") from private funding. ROICs are not built for military applications, but, due to the proposed changes, the ROICs would be subject to the USML. ROICs have no military significance, as they cannot be used as for night vision devices and are too slow to image laser designators.

For the above reasons, we believe the proposed regulations are overbroad and should either be amended or discarded in their entirety.

3. Proposed Rule on Two-dimensional Arrays

Categorizing arrays as "two-dimensional" is not an appropriate way to distinguish between military and non-military applications in the USML and CCL.

The parameters chosen do not set bright lines and are overbroad. The proposed regulation does not define night vision devices or military grade infrared imaging device. As long as the peak responsivity is in the range and has an ROIC, the device would be included on the USML and subject to the ITAR. The regulations, instead, should include parameters about amplifiers with row switches. Otherwise, ganged telecommunication devices would easily fall within this category.

Furthermore, the distinction between what is currently available worldwide and what is considered USML should be clarified. SWIR 2D imagers are rarely deployed in the United States military arsenal, and there are no plans for large orders in the near future. As a result, 2D imagers that are actually used in military deployed systems should be considered USML, but everything else should be on the CCL list.

3.1. Two-dimensional arrays in paragraph (c)(2), (c)(4)

We believe the language in proposed Category XII(c)(2) is overbroad and covers all permanently encapsulated sensor assemblies that detect in the range from >900nm to <30,000nm with our without amplifiers. For example, as noted above, any telecommunication detector element used in fiber optic telecommunications would fall under the regulations. Single element photon detectors are readily available now and have been deployed worldwide for years.

In addition, the language in proposed Category XII (c)(4) is too broad, because it includes all 2D detectors with >256 elements (or 16x16 focal plane arrays) that are packaged. Currently, there are very few 2D image sensors in this wavelength band that are actually deployed in military systems. The few deployed SWIR sensors are 640x512 or higher resolution, have very high sensitivity and low noise (>80% QE at 1.55um and noise floors <35e- for a given 12 to 25um pitch). They also have many features including large dynamic range that allow them to handle many light levels and they are hardened for military environments.

The scope of the proposed USML also needs to clarify how to distinguish between a military and nonmilitary sensor. One way to distinguish the categories would be to define

Princeton Infrared Technologies

a D* number or another measure of sensitivity adjusted for noise, response and pixel area. Other metrics could also include resolution and pixel pitch. The proposed regulation also does not define what an infrared focal plane array is and what it does.

Furthermore, and as discussed above, any two-dimensional detector array would be considered ITAR if it is not "permanently encapsulated." The disadvantages of calling out permanently encapsulated sensor assemblies are described in the previous section.

Regarding what is currently available worldwide, arrays as large at 640x512 are readily available from foreign sources. Last April, SCD in Israel announced that it is moving to 1280x1024 on 10um pitch for InGaAs in the SWIR band, 900nm-1700nm. The ROICs for 1280x1024 on 15um pitch in SWIR are also commercially available outside this country (i.e. Turkey). Thus, the restrictions would set the U.S. behind countries like Israel and Turkey.

The following list contains a few other examples from around the world:

- China- GHOPTO
  - 640x512 -25um pitch arrays - http://www.ghopto.com/en/index.php?m=content&c=index&a=show&catid=14&id=63
  - Cameras - http://www.ghopto.com/en/index.php?m=content&c=index&a=show&catid=14&id=63
- Taiwan- Chungwah
  - 640x512-25um pitch - http://www.leadinglight.com.tw/images/Small%20format%20FPA%20spec.pdf
- Japan- Hamamatsu
  - 640x512-20um pitch cameras
    - http://www.hamamatsu.com/resources/pdf/sys/SCAS0074E_C10633-34.pdf
  - 128x128 on 20um and 50um pitch sensors
    - http://www.hamamatsu.com/us/en/product/category/3100/4005/4208/4125/G12242-0707W/index.html
    - http://www.hamamatsu.com/us/en/product/category/3100/4005/4208/4125/G12460-0606S/index.html
- France- Sofradir
  - 640x512-25um pitch InGaAs
    - http://www.sofradir.com/product/snake-sw/

Princeton Infrared Technologies

- 1000x256-30um MCT (0.4-2.5um)
  - http://www.sofradir.com/product/saturn-visir-2/
- France- New Imaging Technologies
  - 640x480-15um pitch InGaAs
    - http://www.new-imaging-technologies.com/ingaas-products.html
- Belgium- Xenics
  - 640x512-20um pitch InGaAs (0.9-1.7um)
- Israel- SCD, Inc.
  - 640x512-15um pitch InGaAs
    - http://www.scd.co.il/SCD/Templates/showpage.asp?DBID=1&LNGID=1&TMID=108&FID=1287&IID=1682
  - 1280x1024-10um pitch InGaAS
    - http://www.scd.co.il/SCD/Templates/showpage.asp?DBID=1&LNGID=1&TMID=178&FID=1148&PID=0&IID=1780
- Turkey
  - 1280x1024-15um pitch ROIC for InGaAs
  - This ROIC is built for InGaAs and is commercially avaialable with rms noise of less than 5e-
    - http://www.mikro-tasarim.com.tr/products/view/3

Moreover, for night vision, the U.S. Military is only using a few SWIR focal plane arrays (<300/year) because they do not perform as well as night vision goggles. Regarding the ability to detect lasers of 1.06um, silicon cameras (similar to the cameras on cell phones) already exist to detect the signals at high resolution and with low noise imagers. Of course, camera phones are not restricted under the USML. These sensors are readily available worldwide at high or low resolution, are incredibly inexpensive, and are currently deployed in munitions and laser spotter systems:

- http://www.lumenera.com/resources/documents/datasheets/industrial/Lt225-datasheet.pdf
- http://www.lumenera.com/resources/documents/datasheets/microscopy/infinity3-3URF-datasheet.pdf

Instead, there are many commercial applications of these SWIR arrays including hyperspectral imaging, machine vision, laser beam profiling, semiconductor inspection, glass inspection, pulp and paper processing, art inspection, and thermal imaging. Since these designers are now looking for higher resolution and greater sensitivity, the companies would need to look to foreign SWIR imagers due to the proposed rule.

3.2. Proposed Category XII(v)

This proposed section states that "specially designed" camera cores with 1D and 2D arrays would be subject to the ITAR if the array has more than 640 elements. However, the majority of linescan cameras (1D) were designed with private commercial funding and none are used in military systems at this wavelength range. The proposed regulation would therefore restrict almost all spectrometers on the market in this wavelength range. It is unclear how the camera electronics and 1D arrays greater than 640 elements are military grade, especially when there are thousands of these devices in telecommunications networks across the world. These devices are currently classified as EAR99, and this is where they should remain. After all, and as discussed above, the 1D arrays cannot be used in night vision devices or laser spotting systems. In addition most spectrometers in the world use linear arrays and electronics to run the 1D imagers. This would put almost every spectrometer in the ITAR category.

3.3. Proposed Category XI(vii)

Proposed Category XII(vii) is similar to (v) but adds the "permanently encapsulated sensors assembly" language. Essentially, this proposed provision states that camera electronics at <u>any</u> resolution would be subject to ITAR. Again, the proposed regulation is overbroad and would apply to the millions of telecommunication receiver arrays and spectrometers installed today. These devices are not currently being used in any military systems, were not designed for military systems, and many linear array cameras are available worldwide with higher resolutions and frame rates. These devices are sufficiently regulated under the EAR as EAR99, and no changes should be made to the process. Furthermore, section XII(v) already encompasses the majority of the requirements under XII(vii) and it is unclear why a separate classification is needed.

3.4. Proposed Category XII(viii)

This proposed classification covers camera modules in the wavelength range of 900-2500nm with less than 111,000 elements. Again, the restriction is overbroad especially in reference to the devices currently available in the market. An 111,000 element array is slightly larger than a 320x256 imager. Using the number of elements as a restriction does not provide an appropriate bright line to categorize camera modules. As stated earlier, the regulation should restrict camera modules "specially designed" for military systems. General camera modules with SWIR response should not be covered since they are not night vision devices and are not made to spot lasers. The USML should be focused on exporting hardware which could compromise our technological advantage. As a result, it

would be better to restrict camera modules that were specially designed for a military system and describing those metrics more specifically. Again, these metrics include sensitivity, resolution, frame rate, and pixel pitch specifications for a given size, weight and power that makes this a military system.

Currently, the proposed regulation just serves to limit the currently available commercial devices that the U.S. military would never even purchase. As stated earlier, the Department of Defense has deployed very few systems with imagers across this wavelength range, because the current sensitivity at room temperature is not good enough for night vision imaging. Increasing the size, weight, and power would allow for greater night vision, but the system would become too large or require too much power to be deployed by an enemy. As such, Princeton IR believes that the regulations should be rewritten to better distinguish between military and commercial devices.

3.5. Proposed Category XII(e)(3)

This section discusses wafers incorporating structures for either a ROIC (paragraph (e)(4) or (5)), an IRFPA or detector elements (paragraph (c)(2)). Princeton IR again believes this regulation is overbroad and should be removed.

A basic interpretation of the proposed classification means that it covers any component of the formation of the IRFPA. As a result, manufacturers of telecommunication detectors and IRFPAs would need to obtain ITAR licenses for the entire SWIR formation process. These devices are manufactured using a mask set, and that mask is repeated across a wafer creating an array of detectors. Even a single element device is a detector array at the wafer level thus placing the wafer as ITAR USML. Since most of the substrate materials are manufactured and growth of the material currently occurs outside the United States, every telecommunication detector manufacturer would need to obtain ITAR technical data licenses to allow them to share product specifications and requirements necessary to obtain the material for production in addition to their current procurement processes. Some companies even diffuse their wafers in reactors outside the United States, which would also require licenses. Adding restrictions to an already difficult to obtain material is undesirable—three ITAR authorizations may be needed just to cover the process. The new proposed regulation would overburden the process and take away from the U.S. advantage of combining of the detector material with the ROICs. Commercial products and R&D in Universities as well as labs would all need licenses just to obtain raw material. The key element is the final device not the various parts that compose it. Since there are few manufacturers in the U.S. the state department is creating unnecessary hurdles for material readily and mostly available outside the U.S.

As a result, the restrictions need to be clearer regarding whether the above licensing situation is necessary. As it stands, the regulation does not protect American interests,

because it simply forces U.S. companies to obtain too many licenses, whereas the technology is already more readily available in other countries. This does not fit the definition of higher walls around fewer items.

3.6. Proposed Categories XII(e)(4)(i) and (ii)

This section covers ROICs designed for: (i) One-dimensional photon detector IRFPA having greater than 640 detector elements; (ii) Two-dimensional photon detector IRFPA having greater than 256 detector elements. As discussed in a previous section, the Department of Defense has not invested in a 1D linear array in over 15 years with a wavelength in the range of 700nm to 2500nm. The Department of Defense also has not deployed linear arrays in any system in over 15 years and there are, to the best of our knowledge, no plans to deploy a 1D array across this wavelength band. As a result, it does not make sense to place a restriction on IRFPAs with over 640 elements.

Even if the regulation is enacted as proposed, the linear array ROICs are currently available from Japan, France and Belgium. Thus, the max of 640 elements seems to be an arbitrary number. As discussed earlier, there are no military applications of one-dimensional photon detector IRFPAs and, as such, these ROICs should not be included on the USML. On (ii) for two dimensional arrays, the regulation should clarify the requirements in terms of frame rate, read noise, amplification and pixel pitch or simply include items that are "specially designed" for military applications. Restricting the number of pixels does not clearly separate military and commercial applications, have any military significance, or show how without the regulation it would be detrimental to national security. The regulation merely protects the enemy by placing costly burdens on U.S. manufacturers and by making it more difficult to sell our product as compared to the rest of the world. The more ROICs sold by foreign companies, the smarter they become in manufacturing and design, and over time, the U.S.'s technological advantage will be lost. The restriction on ROICs need to be for military articles only. A definition of a military ROIC needs to be established.

3.7. Proposed Category XII(e)(9)

The proposed regulation in this section on lenses that relate to IR imagers is too restrictive. We interpret the proposed regulation to mean that all optical elements that work with imagers, even for commercial applications, would be restricted by the ITAR. The regulation should instead only cover optical elements specifically designed for military systems. There is no reason why commercial lenses with coating for this wavelength band or materials optimized for this wavelength should be restricted under the ITAR.

4. Comments on other modifications of the CCL

4.1. General Commentary

The CCL is complicated, lengthy and should be simplified to better serve the needs of small businesses. Currently, we are able to manage the workload with minimal advice from our attorneys. However, due to the new, complex language and overuse of acronyms, small businesses must hire expensive attorneys for advice and assistance in establishing the correct procedures for exports. Businesses also need to pay for a full-time administrator to handle the increase in paperwork and documentation. The modifications were meant to simplify the process, but we believe the changes have actually made the process more difficult.

4.2. Additions to Section 740.2

First, the metrics used in the regulations do not provide a sufficient basis for a night vision imager. As stated above, the linear arrays are incapable of imaging at night, even under full moon conditions, because of their limited integration time and scanning needs. The 2D imagers also cannot image at night unless they have very low noise performance or large pixels—neither of which is noted in the USML or CCL guidelines. The regulations should be amended to include performance metrics that more accurately characterize night vision cameras beyond the number of pixels. Furthermore, the one-dimensional imagers in the SWIR range of 0.9-2.5um have never been used as a night vision device and have never been deployed in military systems. The 2D SWIR imagers have been deployed in very limited unumbers but had very specific performance specifications that were adjusted for the military application and contained specialized firmware for use in the field.

4.3. Addition of Definition to Part 772

As discussed previously, "permanent encapsulated sensors assembly," is not the best way to categorize the sensors. The primary advantage of InGaAs SWIR sensors is their ability to operate without a hermetically sealed packaging and without cooling. As mentioned, this rule would hinder U.S. manufacturers' ability to compete in the world market for commercial product. The alternative would be to build a package that deactivates the device upon opening, but this solution is technically challenging and very expensive. We reiterate that the concept of "permanent encapsulated sensors assembl[ies]" should be removed in its entirety from all regulations.

4.4. Revisions to ECCN 0A919

We believe this section states that parts that meet 6A002 or 6A003 are controlled if one imports them from another country even if there are no U.S. parts on board. The regulation would create a flood of unnecessary license requests and should be amended to simplify the process.

4.5. Revisions to ECCN 6A002

ECCN's RS controls would require licenses for all destinations, including Canada, for the entire entry. This appears to be unnecessary for linear arrays which are not night vision capable and not capable of being used to image lasers in the two-dimensional format as stated above. Also, as discussed above, there are commercial alternatives available worldwide.

The proposed rule would also supersede the linear arrays with tall pixels which are already subject to the less-restrictive Wassanaar list. Without clearer specifications focused on night vision cameras, two-dimensional arrays would be subjected to tougher licensing standards. There are many commercial applications for SWIR imagers not in permanent encapsulated sensors, so the proposed rule would cause a tidal wave of license requests. (As discussed previously, these linear arrays are used in spectrometers in university labs and companies all over the country and would burden a significant population to obtain the appropriate licenses.)

4.6. 6a990

We understand the DoD is trying to restrict sensitive information on military grade ROICs from leaving the country; however, to be effective, the regulation needs to distinguish military and commercially designed ROICs more clearly. Commercial ROICs should be excused from the CCL and USML by drafting regulations with more specific characteristics such as frame rate, read noise and dynamic range. Even if the ROICs are restricted in this country, IRFPA ROICs are readily available worldwide up to resolutions of 1280x1024. Furthermore, linear arrays were almost all developed using private funds and were never created with a military application in mind. The technology also does not easily allow for night vision imaging and is not capable of imaging a laser spot.

Note: We believe that the exception for ROICs valued under $500 appears reasonable Wafers from a foundry cost about $5,000, and one receives more than 10 chips even for larger devices.

4.7. Revisions to ECCNs 6E001 and 6E002

The proposed rule puts harsh restrictions on the commodities related to manufacturing a focal plane array including substrates, epitaxial grown materials, zinc diffusion, software and firmware in cameras. The commodities portion of the proposed rules is our biggest concern because lattice matched InGaAs epitaxial wafers are currently not made in the United States. Due to the commodities restriction, the proposed rule would require all companies to get a license. We believe the rule will heavily impact the SWIR and

Princeton
Infrared Technologies

telecommunications industries unless and until licenses are issued. (Companies that manufacture telecommunications devices use InGaAs detector material for single element devices and would be subject to the same regulations.)

A license would also be required for the software that interfaces with the arrays for either manufacture or testing applications including the software that interfaces with the cameras. U.S. companies using non-U.S. workers—including consultants, visitors, or temporary employees—would be subjected to the heightened regulations even if the cameras are just in the U.S. plants. Any person in the company with access to the cameras would place the entire company in violation of the proposed rule.

As a result, this rule is not protecting U.S. technology and is just making SWIR commercial equipment more difficult to use. Companies will resort to other solutions ultimately weakening the SWIR industry at home.

5. Conclusion

For the foregoing reasons, the proposed regulations are generally overbroad than the current rules and pull many items from the EAR99 to the USML list. Princeton IR believes more bright lines are necessary to distinguish military hardware from commercial hardware. Furthermore, Princeton IR believes that more investigation should be conducted to understand the technology readily available worldwide. The far-reaching implications of the proposed regulations would have serious impacts on a number of industries.

Respectfully submitted,

Martin H. Ettenberg, Ph. D.

Princeton Instruments

July 2, 2015

Princeton Instruments Inc.,
(NJ Location)
3660 Quakerbridge Rd.,
Trenton, NJ 08619
Ph: (609) 587-9797

Princeton Instruments Inc.,
(MA Location)
15 Discovery Way,
Acton, MA 01720
Ph: (978) 263-3584

To:
Regulatory Policy Division
Bureau of Industry and Security
U.S. Department of Commerce
Washington D.C. 20230

Re: Proposed amendment to the Export Administration Regulations (EAR): RIN 0694-AF75.
References proposed changes U.S. Munitions List Category XII (RIN 1400-AD32)

Dear Sir/Madam,

Princeton Instruments is providing the following comments towards the proposed revisions to the Export Administration Regulations (EAR) which reference the U.S. Munitions List Category XII published on May 4, 2015 as part of Export Control Reform (ECR). Specifically, Princeton Instruments would like to comment on proposed changes pertaining to certain image intensifier tubes, infrared focal plane arrays (IRFPAs) and charge multiplication focal plane arrays and associated cameras which will move them from 6A003 and 6A203 categories in Commerce Control List (CCL) to USML.

Summary Comments

Princeton Instruments believes that the proposed revisions to ECCNs 6A003 and 6A203 of Commerce Control List and USML Category XII (c) published on May 4, 2015 as part of Export Control Reform (ECR), constitute a technology dragnet that will be rife with unintended negative consequence and strategic damage to the United States. It will be tantamount to scientific book burning in its effects on the U.S. industrial base and on university research. And ultimately, it will have an opposite effect to what is intended on foreign availability.

The proposed revisions would so constrict the U. S. market for scientific cameras (and collaterally, spectrographs that employ cameras as detectors) at universities and commercial enterprises that domestic development and manufacture of ICCD's, EMCCD's and InGaAs scientific cameras will vanish from the U. S. Development of these products will be consolidated in Europe and Asia where most of the sensors employed in these products already originate.

Princeton Instruments produces ICCD, EMCCD and InGaAs cameras which are used by our national laboratories and in universities performing cutting edge physical science and medical research.

Every single foreign sale of these products by Princeton Instruments is already export controlled and many pending sales are denied. This affords the U.S. Government cognizance, oversight and

control of the deployment of these products around the world. The proposed revisions would so limit our sales of these products to even US universities with significant numbers of foreign affiliated researchers so as to make the business not viable. On the other hand, our European and Asian competitors will freely benefit. A significant national resource will be destroyed. And, Government cognizance, oversight and control will be forfeited.

Uncontrolled foreign manufacturers of these products will be substantially strengthened by the proposed revisions. They will aggressively market these products with "ITAR free" slogans to ensure unfettered supply to end users.

University research performed with the impacted scientific ICCD, EMCCD and InGaAs cameras and spectrographs will migrate to foreign institutions because the use of even foreign-produced equipment will be impractical because of ITAR restrictions.

We strongly urge reconsideration and reformulation of the proposed revisions to ECCNs 6A003 and 6A203 of Commerce Control List and USML Category XII (c)

Detailed Comments

Princeton Instruments designs and manufactures scientific charge coupled device (CCD), intensified CCD (ICCD), electron multiplication CCD (EMCCD), x-ray and InGaAs sensor based cameras, spectrographs, optics and coatings. We are located in Trenton, NJ and Acton, MA and employ scientists, engineers, technicians and skilled labor who perform product development and system integration and test. Our products contain approximately 75% content from American suppliers. For over 35 years, we are the leading supplier of scientific cameras for medical and physical science research. Thousands of scientific papers are published in leading academic journals and many important scientific breakthroughs have been made with Princeton Instruments cameras and spectrometers (see EXHIBIT A).

- More than 55% of the camera products from Princeton Instruments are currently controlled by Commerce Control List (CCL) as "Dual Use" items under 6A003 and 6A203 categories.
- Over 70% of Princeton Instruments revenue is from exports.
- It is noteworthy that ALL of the "controlled" sensor technologies incorporated into Princeton Instruments products are from "**non-US**" suppliers. For example,
  - Image Intensifiers are imported from Japan and Holland.
  - EMCCDs are imported from UK.
  - InGaAs IRFPAs are imported from Belgium.
- None of the products are designed or enhanced specifically for military and are *not* ruggedized.

...continued

Princeton Instruments strongly opposes proposed Category XII amendments

The original intent of Export Control Reform was to build higher walls around fewer items which are exclusive to US ("crown jewels for national security and developed by US companies") and are of most military significance. However, the proposed amendments to ECCN 6A003/6A203 categories in USML and Category XII, sections c(1) to c(9) of USML which intend to bring ICCD, EMCCD and InGaAs sensor and camera technologies under ITAR control, while not in the spirit of the original intent, will actually lead to severe negative consequences.

Princeton Instruments strongly opposes these amendments because:

- **Foreign availability is not adequately considered.**
  - As shown in EXHIBIT (b), all these sensor technologies and cameras based on these sensors are freely available from EU and Asian companies.
  - They can be exported within EU without any export controls.
  - Already, most of these sensors and cameras are made available to foreign customers - EXHIBIT (c) that provide no oversight capability to US Government.
  - Even under the current EAR/CCL export regulations, US companies such as Princeton Instruments have to deal on a "non-level" playing field. Numerous examples exist where the foreign customer was able to obtain similar or better product after having been denied export license by US Government, a case is shown in EXHIBIT (d).

- **Discrepancy of controls between US and rest of Wassenaar countries**
  - Should the proposed amendments be implemented and ICCD, EMCCD and InGaAs cameras technologies are deemed USML/ITAR controlled, a significant discrepancy would arise between how US and its Wassenaar counterparts control these technologies.
  - While US would impose strict controls under ITAR, no such controls exist in EU countries. In fact, several of our EU and Japanese competitors would benefit as new controls will make US suppler less competitive.
  - Non-US companies with similar products will continue selling freely, and often promote their products using the words "ITAR-Free".

- **ITAR controls are burdensome even to US universities and research customers**
  - ITAR controls not only hinder sales to foreign customers, they adversely affect domestic customers as well
  - Many of our university customers indicated that they would not be interested in purchasing "ITAR" controlled products, as they would place undue burden on their laboratories and universities to safeguard and limit access to foreign students and affiliates. As many of the research labs employ foreign graduate and post graduate students, it will seriously impact research.
  - The status of hundreds of ICCD, EMCCD and InGaAs cameras shipped to US laboratories would significantly impact University's ability to control them.

- **Encourages US and Non-US customers to "design out" ITAR products**
  - All of these technologies are freely available outside US and the foreign producers will actively promote their "Non-ITAR" products which forces customers to move away from US ITAR products.

- Many of these cameras are used in conjunction with "non-controlled" products such as spectrometers and CCD cameras, Princeton Instruments would see even higher revenue decline.

- **Disincentives for US companies like Princeton Instruments to invest in ITAR products and technologies**
  - Princeton Instruments estimates over 30% of its revenue will be lost if the proposed USML/ITAR amendments go through.
  - As a result, we will have to reduce workforce in Trenton, NJ and Acton, MA facilities.
  - As a virtual manufacturer with over 75% U. S. content, our American suppliers' employment would be impacted as well.
  - After over three decades of continuous innovation, it is a National tragedy to see significant engineering and manufacturing resources dwindle away while "Non-US" competitors continue to provide access to technology unimpeded. Stated goals for National security are not achieved.

Princeton Instruments recommends eliminating the proposed revisions to ECCNs 6A003 and 6A203 of Commerce Control List and USML Category XII (c)

As these unprecedented and sweeping changes to bring ICCD, InGaAs and EMCCDs under ITAR controls are detrimental to US industrial and research base, we request that these proposals be fundamentally rewritten after sincere collaboration with stakeholders (industry, US Government, research universities).

Given the significant issues with the structure of the proposed rule, Princeton Instruments strongly suggests that either the US Government continues to use the existing Category XII language or if a second iteration of the proposed rule is requested that it replace "specifically designed" with "specially designed".

Sincerely,

William E. Asher
President
Princeton Instruments, Inc.

Exhibits:
a) A list of scientific research papers based on ICCD, EMCCD and InGaAs cameras
b) "Non-US" supplier list
c) Example of EMCCD exports to China
d) Example of an alternate supplier supplying similar ICCD and EMCCD cameras to a Chinese customer

EXHIBITS

a) List of scientific research publications based on intensified CCD (ICCD), Electron Multiplication CCD (EMCCD) and InGaAs sensor based cameras published in leading scientific journals

Controlled Technology	**Number of scientific research publications (as of July 1, 2015).** *Source: Google Scholar*
ICCD cameras	17,734
EMCCD cameras	9,722
InGaAs cameras	1,122

b) List of "Non-US" suppliers of ICCD, EMCCD and InGaAs sensors and cameras

	Controlled Technology	**Non-US Supplier**	**Country of Origin**	**Website**	**Link to Product**
1	EMCCD cameras	Chongqing Gangyu	China	http://www.camyu.net/	http://www.camyu.net/
2	EMCCD cameras, Intensified CCD cameras	Andor Technology (a division of Oxford Instruments),	Northern Ireland, UK	www.andor.com	EMCCD Camera ICCD camera
3	EMCCD and InGaAs cameras	Raptor Photonics	Northern Ireland	www.raptorphotonics.com	EMCCD Camera InGaAs Camera
4	Intensifier tubes, EMCCD and ICCD Cameras	Hamamatsu, Japan	Japan	www.hamamatsu.com	Intensifier Tubes EMCCD Camera ICCD Camera
5	Intensifier tubes	Photonis	Holland	www.photonis.com	Intensifier Tubes
6	Intensifier tubes, EMCCD and ICCD Cameras	Photek	UK	http://www.photek.com	Intensifier Tubes EMCCD Camera ICCD Camera
7	Infrared focal plane arrays and cameras	Xenics n.v.	Belgium	www.xenics.com	Cameras
8	Intensified CCD cameras, EMCCD cameras and InGaAs cameras	Photonic Science Ltd.	UK	http://www.photonic-science.com/	ICCD Camera EMCCD Camera InGaAs Camera
9	Infrared focal plane arrays	Chunghwa	Taiwan	http://www.leadinglight.com.tw/	Infrared FPA
10	Intensified CCD cameras	PCO	Germany	www.pco.de	ICCD Camera
11	Intensified CCD cameras	LaVision	Germany	http://www.lavision.de/en	ICCD Camera

12	InGaAs cameras	Allied Vision Technology (AVT)	Germany	http://www.alliedvision.com	InGaAs Camera
13	Infrared focal plane arrays, Intensified CCD camera and InGaAs camera	New Imaging Technologies (NIT)	France	http://www.new-imaging-technologies.com	ICCD Camera InGaAs Camera
14	EMCCD sensors	E2V Technologies	UK	www.e2v.com	EMCCD Sensors
15	EMCCD, InGaAs and MCT cameras	Photon etc.,	Canada	http://www.photonetc.com/en/	Infrared Camera EMCCD Camera
16	EMCCD and InGaAs cameras	First Light Imaging	France	http://www.firstlight.fr	EMCCD and InGaAs Camera
17	EMCCD camera	NuVu camera	Canada	http://www.nuvucameras.com	EMCCD Camera
18	InGaAs sensor and Camera	Sumitomo Electric	Japan	http://global-sei.com/products/compovision	InGaAs Camera
19	InGaAs camera	Artray	Japan	http://www.artray.co.jp	InGaAs Camera

c) Sixty (60) CCD97 EMCCD sensors exported to China from UK - License approval document from UK Government shown below.

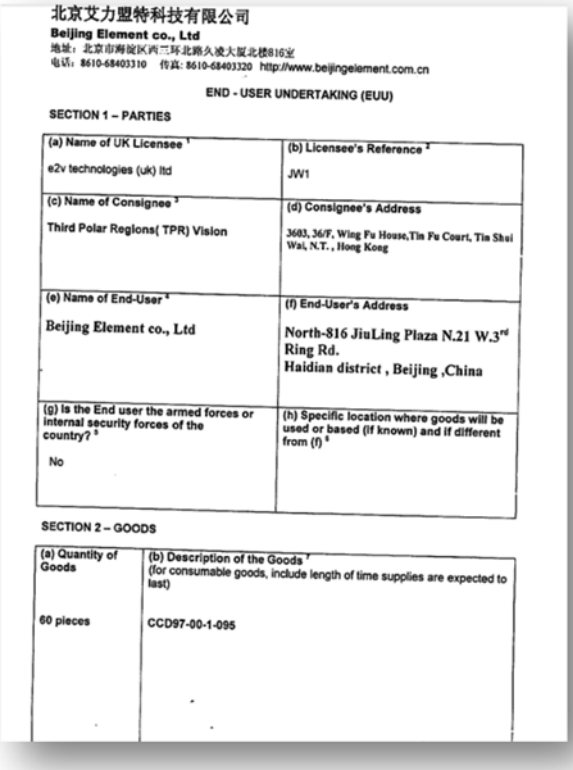

北京艾力盟特科技有限公司
Beijing Element co., Ltd
地址：北京市海淀区西三环北路久凌大厦北楼816室
电话：8610-68403310 传真：8610-68403320 http://www.beijingelement.com.cn

END - USER UNDERTAKING (EUU)

SECTION 1 – PARTIES

(a) Name of UK Licensee [1] e2v technologies (uk) ltd	(b) Licensee's Reference [2] JW1
(c) Name of Consignee [3] Third Polar Regions(TPR) Vision	(d) Consignee's Address 3603, 36/F, Wing Fu House,Tin Fu Court, Tin Shui Wai, N.T. , Hong Kong
(e) Name of End-User [4] Beijing Element co., Ltd	(f) End-User's Address North-816 JiuLing Plaza N.21 W.3rd Ring Rd. Haidian district , Beijing ,China
(g) Is the End user the armed forces or internal security forces of the country? [5] No	(h) Specific location where goods will be used or based (if known) and if different from (f) [6]

SECTION 2 – GOODS

(a) Quantity of Goods 60 pieces	(b) Description of the Goods [7] (for consumable goods, include length of time supplies are expected to last) CCD97-00-1-095

d) ICCD and EMCCD camera installations in China exported by Andor Technologies (UK). The purchase was made by the end user after denial by US Government.

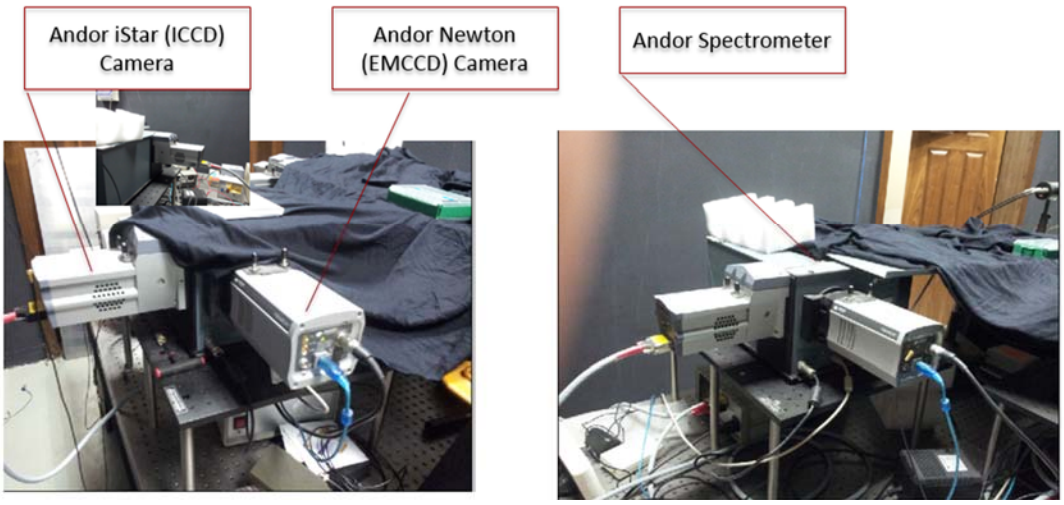

Andor cameras and spectrograph installations at Shanghai Institute of Optics and Mechanics (SIOM, Prof. Jianjun Liu). No business from SIOM since 2013 E/L denials.

Raytheon

Raytheon Company
1100 Wilson Boulevard
Arlington, Virginia
22209 USA

July 6, 2015

Via Email

Mr. Dennis Krepp
Office of National Security
and Technology Transfer Controls
Bureau of Industry and Security
U.S. Department of Commerce
14th Street and Pennsylvania Ave., NW
Washington, DC 20230

Email: publiccomments@bis.doc.gov

Reference: RIN 0694-AF75

Subject: Review of Fire Control, Range Finder, Optical, and Guidance and Control Equipment No Longer Warranting Control under the U.S. Munitions List

Dear Mr. Krepp:

Raytheon Company ("Raytheon") respectfully submits the following comments on the proposed changes to the Commerce Control List ("CCL"), 15 C.F.R. §774, Supplement No. 1, set forth in the Bureau of Industry and Security's notice of proposed rulemaking entitled, *Control of Fire Control, Range Finder, Optical, and Guidance and Control Equipment the President Determines No Longer Warrant Control Under the U.S. Munitions List*, 80 Fed. Reg. 25,798 (May 5, 2015). We applaud your Office's tireless efforts in bringing Export Control Reform to fruition. Based upon our extensive experience as a manufacturer and exporter of fire control, range finder, optical, and guidance and control equipment, we would like to draw the attention of BIS to those proposed entries on the CCL that require clarification or may be overly broad.

Please see our detailed comments below. In addition, Raytheon's comments to the Bureau of Industry and Security's companion proposed rule titled, *Amendment to the International Traffic in Arms Regulations: Revision of U.S. Munitions List Category XII*, 80 Fed. Reg. 25821 (May 5, 2015) are provided for your reference in **Attachment A**.

EAR § 772.1 – Clarify the meaning of "permanent encapsulated sensor assembly"

Raytheon requests clarification on the requirement and definition of "permanent encapsulated sensor assembly" within Export Administration Regulations ("EAR") §772.1. Raytheon believes that the definition should apply to packaged detectors and not to higher level integrations incorporating camera electronics. In addition,

> protection schemes requirements should not apply to microbolometer infrared focal plane arrays ("IRFPAs") that are already widely available on the commercial marketplace. Therefore, we recommend revising the control criteria to avoid capturing these commercial items.

We request additional clarification on the requirement and definition of "permanent encapsulated sensor assembly." It is unclear if a "permanent encapsulated sensor assembly" means a packaged detector only or a higher level of integration incorporating camera core electronics. Additionally it is unclear if some additional protection scheme is required to "prevent direct access", disassembly, and removal of the IRFPA. Any article may ultimately be reverse engineered with sufficient time and resources.

We recommend that such a requirement may not be necessary for those IRFPAs that are currently widely available in the global commercial market.

We recommend that a definition of "permanent encapsulated sensor assembly" be added to EAR §772.1 as follows:

> *A permanent encapsulated sensor assembly (e.g. sealed enclosure, vacuum package, or wafer level packaged detector) is one that makes the assembly inoperable if subjected to typical commercial disassembly.*

ECCN 6E001 and 6E002 Related Controls – Recommend revisions to narrow the controls

> Raytheon recommends revising the proposed language in the paragraph 3 of the "Related Controls" to Export Control Classification Numbers ("ECCNs") 6E001 and 6E002. Raytheon notes that the intent of these controls appears to be on technology related to the removal of a "permanent encapsulated sensor assembly." The commenting party requested revisions to limit the scope of the proposed controls.

We believe that the intent of these proposed provisions is to control technology related to the removal of a "permanent encapsulated sensor assembly," and believe that the proposed language is overly broad and unnecessary in achieving the intended level of control. For example, the types of information listed in paragraph 3 (e.g., "mechanical dimensions and physical characteristics of the sensor assembly") related to integration are generally in the public domain and published by manufacturers in their in marketing materials.

We recommend that paragraph (3) of the Related Controls section of both 6E001 and 6E002 be revised as follows to more properly focus on removing the controlled items:

> *(3) Technology **"required"** for **removing** a "permanent encapsulated sensor assemblies" subject to the EAR, or **removing** such assemblies **from** an item subject to the EAR, and **removing** image intensifier tubes ("IITs") **from** an item subject to the EAR, including*

> ***removing*** *items subject to the EAR* ***from*** *foreign military commodities outside the United States is subject to the EAR. This technology includes the testing results, operation instructions for a focal plane array* ***removed from*** *a "permanent encapsulated sensor assembly" subject to the EAR, mechanical dimensions and physical characteristics of the sensor assembly provided such information does not include design methodology, engineering analysis, or manufacturing know-how "****required" to operate the removed IRFPAs.***

ECCN 6E990 Technology related to ROICs – Recommend adding a clarifying note

> Raytheon recommends revising the controls to proposed ECCN 6E990 regarding read-out integrated circuits ("ROICs") to limit the scope of the proposed controls to exclude standard commercial foundry designs. Raytheon notes that technology related to standard commercial foundry design or production technology used for ROICs is already available in the commercial marketplace.

Technology related to standard commercial foundry design or production technology utilized for ROICs may not require specific controls considering the foreign availability of standard ROIC products.

ECCN 6E990 would make the design rules and production technology for ROICs subject to substantially tighter control than EAR99, which is currently the case. This technology captured in the new ECCN would include the standard production design rules used in any semiconductor factory. In order to develop or produce these commodities, the product requires design rules from the integrated circuit factory. These commercial design kits, known as process design kits (PDKs"), would now become subject to this much tighter control since they are used in the development and production of this controlled technology. Examples of technology that would now be subject to this control can be found in the following proprietary design manuals from these representative suppliers: SAMSUNG (LN28LPP Technology Design manual), ON Semiconductor (ONC18 PHYSICAL DESIGN RULES), Tower Jazz Semiconductor (CA18 and CR18 Design Rules).

We recommend adding a note to ECCN 6E990 as follows:

> *Technology related to standard commercial foundry designs or production technology utilized for all read-out integrated circuits is not controlled.*

ECCN 6E994 Technology for maintenance, repair, or overhaul of controlled items

> Raytheon recommends revising the controls to proposed ECCN 6E994 to exclude control technology used for both EAR99 items and items controlled with ECCNs of 6A002, 6A003, or 6A990.

We suggest that technology used for both EAR99 controlled items and 6A002, 6A003 or 6A990 controlled items should not be subject to the controls of 6E994. The requirement as proposed is very broad in scope and could capture basic technology for maintenance, repair and overhaul of EAR99 items. We recommend adding a note to ECCN 9E994 excluding technology also used in connection with EAR99 items.

We recommend adding a note as follows:

> *Technology related to maintenance, repair, or overhaul of commodities* ***not*** *controlled under 6A002, 6A003, or 6A990 but that can also be applied to or used for commodities controlled under 6A002, 6A003, or 6A990 is not controlled under 6E994.*

Thank you for the opportunity to present Raytheon's views concerning the proposed revisions to the CCL.

If you have any questions concerning this submission, please contact Karl Abendschein, Senior Manager, Global Trade Compliance, at karl.abendschein@raytheon.com or (703) 284-4275 or the undersigned at julia.court.ryan@raytheon.com.

Sincerely,

Julia Court Ryan
Senior Counsel
Global Trade Compliance, Governance

Karl Abendschein
Senior Manager
Global Trade Compliance, Governance

ATTACHMENT A

RIN 1400-AD32: Proposed Revisions to USML Category XII

Raytheon

Raytheon Company
1100 Wilson Boulevard
Arlington, Virginia
22209 USA

July 6, 2015

Via Email

Mr. C. Edward Peartree
Director
Office of Defense Trade Controls Policy
Directorate of Defense Trade Controls
U.S. Department of State
2401 E Street, NW
SA-1, 12th Floor
Washington, DC 20037

Email: DDTCPublicComments@state.gov

Reference: RIN 1400–AD32

Subject: Review of USML Category XII

Dear Mr. Peartree:

Raytheon Company ("Raytheon") respectfully submits the following comments on U.S. Munitions List ("USML"), 22 C.F.R. §121, Category XII in response to the *Amendment to the International Traffic in Arms Regulations: Revision of U.S. Munitions List Category XII*, 80 Fed. Reg. 25821 (May 5, 2015). We applaud your Office's tireless efforts in bringing Export Control Reform to fruition. Based upon our extensive experience as a manufacturer and exporter of fire control, range finder, optical, and guidance and control equipment, we would like to draw the attention of Directorate of Defense Trade Controls ("DDTC") to certain entries in the proposed that we believe require clarification, control items that are in normal commercial use, and/or are unduly complex/burdensome.

Please see our detailed comments below. In addition, Raytheon's comments to the Bureau of Industry and Security's companion proposed rule on *Control of Fire Control, Range Finder, Optical, and Guidance and Control Equipment the President Determines No Longer Warrant Control Under the U.S. Munitions List*, 80 Fed. Reg. 25,798 (May 5, 2015) are provided for your reference in **Attachment A**.

Category XII(a) – De-conflict with other USML-controlled fire control systems

Raytheon is concerned that proposed Category XII(a) could inadvertently capture fire control systems that are properly classified under other USML categories. We recommend clarifying the scope of Category XII(a) by including a note.

Currently, fire control systems are enumerated in multiple other places on the U.S. Munitions List ("USML"), including Categories VII(g)(12), VIII(h)(16), IV(h)(1), IV(h)(2), and IV(h)(9), no of with are designated as Significant Military Equipment ("SME"). The proposed rule does not provide clear direction as to which fire control systems are intended to be captured in Category XII(a), which is designated as SME.

Based on Federal Register notices 78 Fed. Reg. 22,740 (April 16, 2013) (Initial Implementation of Export Control Reform) and 79 Fed. Reg. 26 (December 31, 2014) (Continued Implementation of Export Control Reform; Correction), the newer regulations revising the above mentioned USML categories supersede any unrevised categories; and as such, while many of the items now enumerated above may have been Category XII(a) in the past and designated as SME, they are now in categories that are not designated as SME. To capture the remaining related (and often less sophisticated) items in Category XII as SME would be a reversal of direction and introduce competing categories.

We also note that there is an industry best practice, and informally encouraged by the Department, to classify an item in a category that is designated as SME when there are two or more arguably applicable entries and the other candidate entry (or entries) are not SME. As such, without a clarifying note providing additional details as to the types of fire control systems that are intended to be captured in Category XII(a), items that are properly classified elsewhere on the USML may be inadvertently controlled under Category XII(a).

Recommendation: Add a Note to Category XII(a) as follows:

> *Note to paragraph (a): For controls on fire control systems specially designed for integration into a Category IV(a) article, ground vehicle, naval vessel or aircraft, see USML Categories IV(h), VI(f), VII(g) and VIII(h) respectively. USML Category XII(a) is limited to systems for soldier mounted, gun-mounted, fixed infrastructure, or free-standing systems (e.g., tripods).*

Category XII(a) – Recommend removing the SME designation for these items

> Raytheon is concerned that proposed Category XII(a) would control fire control systems as SME. Raytheon notes that other fire controls systems, and ones that are more complex than those within Category XII, are not designated as SME elsewhere on the USML. Raytheon recommends removing the proposed SME designation to be consistent with the treatment of other fire control systems on the USML.

The USML currently controls missile, ground vehicle, and aircraft fire control systems as non-SME. *See* USML Category IV(h)(1), Category IV(h)(2), Category VII(g)(12), and Category VIII(h)(16). These systems often offer sophisticated in-flight guidance to munitions. In contrast gun-mounted fire control systems often offer less sophisticated fire control through displaced

reticles. It is inconsistent to control the less sophisticated systems as SME when the more complex systems are not SME.

Recommendation: Remove the proposed SME designation on proposed Category XII(a) to align with Category IV(h)(1), Category IV(h)(2), Category VII(g)(12), and Category VIII(h)(16).

Category XII(b) – Recommend including "specially designed" as a control parameter

> Raytheon is concerned that proposed Category XII(b) would control items that are in normal commercial use. In particular, Raytheon identifies several items below that meet the parameters of proposed Category XII(b) but are in normal commercial use and, thus, should not be controlled on the USML. Raytheon recommends revising the control criteria in Category XII(b) to avoid capturing items that are in normal commercial use.

There are numerous commercial articles that would qualify under the controls within proposed control parameters for Category XII(b). Infrared laser diodes and laser pointers exceeding 1,000 nm have many civil applications as well as target designators. Several examples are provided below. These infrared laser diodes would be controlled by the proposed Category (b)(1) or (b)(2).

There are rangefinders used within modern manufacturing, medical, scientific, and engraving industries that meet the control parameters in Category XII(b)(3). These systems all operate at wavelengths around 1,064 nm because of laser efficiencies and not due to military usage. The power of the laser will drive the overall range of the system. As such, laser power is likely a better indicator of whether the system would have unique military usage.

Further, laser rangefinders in normal commercial use commonly exceed 1,000 nm by virtue of efficient operating wavelengths. One example are the model DBR1064S laser diodes made by Thorlabs, Inc. We have included the laser diode specifications sheet with these comments (see **Attachment B**). These laser diodes operate at 1,064 nm are used in a variety of civilian applications, such as fiber amplifier seeding, second harmonic generation, gain switching, and low-noise pump applications. If the proposed criteria become a final rule, then this item would be a defense article unless the currently proposed performance characteristics are revised.

Additional examples of items in normal commercial use that would be controlled by the proposed USML criteria include:

- Medical: The GentleMax Pro laser is a "single consolidated system that delivers a range of treatments - all skin type hair removal, as well as pigmented and vascular lesions." The GentleMax Pro includes a 1064 nm Nd:YAG laser. If the proposed criteria becomes a final rule, then this item would be a defense article.

  See: http://syneron-candela.com/na/product/gentle-pro-series/howitworks

- Sports: This website identifies numerous general purpose and commercial use laser diodes, such as those used to identify golf balls by golfers, which would exceed the proposed performance parameters. If the proposed criteria becomes a final rule, then these items would be defense articles unless the currently proposed performance characteristics are revised.

  See: http://www.alibaba.com/showroom/golf-rangefinder-laser-diode.html

- Cleaning: This website describes the use of lasers for cleaning purposes for commercial uses. As discussed in the document, pulse duration, pulse frequency, and power dictate the strength and ability for the laser to clean. The product examples included are 1060nm, thus, exceeding the proposed USML threshold.

  See: http://www.logismarket.fr/ip/quantel-lasers-haute-cadence-laserblast-lasers-haute-cadence-440065.pdf

The criteria laid out within proposed Category XII(b) will control most commercial laser systems.

Recommendation: Add the term "specially designed" to proposed USML Category (b)(1), (b)(2), (b)(3), and (b)(4) and add a power requirement criteria.

Category XII(c)(2) – Clarify the meaning of "permanent encapsulated sensor assembly"

> Raytheon requests clarification on the definition of "permanent encapsulated sensor assembly" within proposed Category XII(c)(2). Raytheon recommends that the definition should apply to packaged detectors and not a higher level of integration incorporating camera electronics and provide a protection scheme standard.

We request additional clarification on the definition of "permanent encapsulated sensor assembly." It is unclear if a "permanent encapsulated sensor assembly" means a packaged detector only or a higher level of integration incorporating camera core electronics. Additionally, it is unclear whether the definition includes some additional protection mechanism to "prevent direct access", disassembly, and removal of the infrared focal plane array ("IRFPA"). The exclusion of IRFPAs in a permanent encapsulated sensor assembly strongly suggests the importance of such protection mechanisms. Therefore, we recommend adding clarifying language that the assembly must include a protection scheme to meet the definition of "permanent encapsulated sensor assembly."

We recommend the definition of "permanent encapsulated sensor assembly" within Note 1 to Category XII(c) be revised as follows:

> *A permanent encapsulated sensor assembly (e.g. sealed enclosure, vacuum package, or wafer level packaged detector) is one that makes the assembly inoperable if subjected to typical commercial disassembly.*

Category XII(c)(2) – Revise criteria for IRFPAs peak response and operating temperature

> Raytheon is concerned that proposed Category XII(c)(2) would inadvertently control consumer silicon imaging sensors. In particular, Raytheon identifies below several items that are in normal commercial use, such as for cell phones and digital cameras, and that are not currently controlled on the USML but may, inadvertently, as result of the proposed rule, become so controlled. Raytheon recommends revising the control criteria to avoid capturing items in normal commercial use.

The proposed wavelength range beginning at 900 nm may inadvertently capture certain silicon imaging sensors currently used in cell phones and other consumer digital cameras. The material characteristics of silicon provide the bandgap is 1.12 eV at room temperature and 1.17 eV at absolute zero and the cutoff or peak wavelength is 1107 nm at room temperature and 1059 nm at absolute zero. Consequently, we recommend 900 nm be changed to 1,200 nm.

In addition, we recommend including a temperature based parameter to release certain civil IRFAs that operate above 1,200 nm. Sensors for astronomy use extrinsic silicon IRFPAs that must operate at very low temperatures, *e.g.*, below 13K. For example, the operating temperature for Raytheon's Aquarius astronomy sensor is 8-10K. IRFPAs that operate at temperatures below 20K would be impractical in military applications due to the power and size required to cool them to such low operating temperatures. The addition of performance criteria relative to operating temperatures (*i.e.*, above 20K) would allow for the release of IRFPAs designed for astronomy use from the USML to the Commerce Control List ("CCL").

<u>Recommendation</u>: The control parameters in proposed Category XII(c)(2) should be revised to:

> *Photon detector, microbolometer detector, or multispectral detector infrared focal plane arrays (IRFPAs) having a peak response within the wavelength range exceeding* ***1,200*** *nm but not exceeding 30,000 nm,* ***that operate at temperatures above 20K****, and not integrated into a permanent encapsulated sensor assembly, and detector elements therefor;*
>
> *Note 1 to Paragraph (c)(2): This paragraph does not control lead sulfide or lead selenide IRFPAs having a peak response within the wavelength range exceeding* ***1,200 nm*** *but not exceeding 5,000 nm and not exceeding 16 detector elements, or pyrolectric IRFPAs with detectors composed of any of the following or their variants: Triglycine sulphate, lead-lanthanum-zirconium titanate, lithium tantalite, polyvinylidene fluoride, or strontium barium niobate.*

Category XII(c)(2) – Revise to avoid controlling items in normal commercial use

> Raytheon is concerned that proposed Category XII(c)(2) would control detectors with four or less elements that are in normal commercial use. In particular,

> Raytheon identifies below several such items that are in commercial use and not currently controlled on the USML. In order to avoid capturing commercial quadrant detectors, Raytheon recommends revising the control criteria to adopt the EAR §772.1 definition of Focal Plane Array.

Quadrant detectors are dual-use items and that are readily available in the commercial marketplace. Attached are two brochures that evidence normal commercial use, i.e., the Excelitas YAG-555- (**Attachment C**) and 4AH the First Sensor QP154-Q (**Attachment D**). These items are four element detectors that are designed as general purpose commodities. They would not qualify as a "Focal Plane Array" under the CCL definition. The International Traffic in Arms Regulations ("ITAR"), however, lacks a definition of "Focal Plane Array". To control items such as these that are in normal commercial use is inconsistent with the stated objectives of Export Control Reform to only control those items on the USML that provide a significant military or intelligence advantage to the United States.

In recognizing the dual-use nature of these items, the function and performance capabilities of quadrant detectors have historically been controlled by the Department of Commerce. The Export Administration Regulations ("EAR") controls on focal plane arrays specifically exclude quadrant and other four or less element detectors (*see* EAR § 772.1 for the definition of focal plane array):

> *N.B. This [Focal plane array] definition does not include a stack of single detector elements or any two, three, or four element detectors provided time delay and integration is not performed within the element.*

The proposed Category XII(c)(2) reads as follows:

> *Photon detector, microbolometer detector, or multispectral detector infrared focal plane arrays (IRFPAs) having a peak response within the wavelength range exceeding 900 nm but not exceeding 30,000 nm and not integrated into a permanent encapsulated sensor assembly, and detector elements therefore;*

As proposed Category XII(c)(2) does not use specially designed as a control parameter. Therefore, any four or less element quadrant detector will be controlled on the USML.

<u>Recommendation</u>: Add a Note to Category XII(c)(2) that mirrors the N.B. in EAR § 772.1:

> *Note X to paragraph (c)(2): This paragraph does not control single detector elements or any two, three, or four element detectors provided time delay and integration is not performed within the element.*

Category XII(c)(3) – Clarify the meaning of a one-dimensional photon detector IRFPAs

> Raytheon recommends that proposed Category XII(c)(3) define the number of detector elements in "one-dimensional photon detector IRFPAs" by the number of

> cross scan detector elements. Raytheon notes that, as proposed, the application of the proposed control criteria would control items in normal commercial use. We recommend revising the control criteria to avoid capturing these commercial items.

DDTC should clarify that the number of detector elements in "one-dimensional photon detector IRFPAs" would be defined by the number of cross scan detector elements. Such IR scanning arrays are also referred to as "linear TDI" IRFPAs.

Under the proposed control criteria, a 576 x 7 linear TDI IRFPA would be defined as a "one-dimensional photon detector IRFPA" having 576 detector elements after TDI. These IRFPAs are currently commercially available, such as the 576 x 7 linear TDI IRFPA manufactured by AIM Infrarot-Module and the 486 x 6 array manufactured by Sofradir-EC.

As these items are already commercially available, the control criteria should be revised accordingly to only capture those items that are not in normal commercial use and that provide a significant military or intelligence advantage to the United States such that control is warranted under the ITAR.

Recommendation: The control parameters in proposed Category XII(c)(3) should be revised to:

> *One-dimensional photon detector IRFPAs described in paragraph (c)(2) of this category in a permanent encapsulated sensor assembly, having greater than 640 detector elements* ***after Time Delay and Integration (TDI)***;

Category XII(c)(5) – Revise the control criteria on microbolometer IRFPAs

> Raytheon is concerned that proposed Category XII(c)(5) would control items that are in normal commercial use. Raytheon notes that this is an area where commercial applications are growing significantly and outpacing military uses. Raytheon recommends revising the control criteria to avoid capturing commercial items.

Microbolometer IRFPAs (uncooled, long wavelength thermal detectors) are widely available in the global commercial market. There are a number of foreign manufacturers that export microbolometer IRFPAs for commercial applications without integrating them into a camera core, or camera, and some of these manufacturers currently sell 1024 x 768 microbolometer IRFPA arrays (786,432 detector elements). See Ulis (France) Pico1024 Gen2, 1024x768 (**Attachment E**); GWIC (China) GWIR 0302X1A, 640x480 (**Attachment F**); and, Dali (China) DLC640, 640x480 (**Attachment G**).

2013 Non-US Thermal Detector Manufacturers					
Company	**Country**	**Sensor Type**	**Detector Formats**	**Units Produced**	**Market Share**

Ulis	France	a-Si microbolometer	80x80	384x288	640x480	1024x768	70,000	18%
GWIC	China	VOx microbolometer	160x120	384x288	640x512		25,000	7%
Irisys	UK	pyroelectric	16x16 to 80x80				17,000	4%
SCD	Israel	VOx microbolometer		384x288	640x480	1024x768	7,000	2%
NEC Avio	Japan	VOx microbolometer		320x240	640x480		6,000	2%
Dali	China	a-Si microbolometer	160x120	384x288	640x480		200 (new market entrant)	0%
TOTAL							125,000	33%
Production and market share: Uncooled Infrared Imaging Technology & Market Trends, Yole Development, July 2014								

Additional microbolometer manufacturers entered the market in 2014, or are expected to enter soon, including: i3system (South Korea); HanVision (South Korea); Teledyne Dalsa (Canada); and Toshiba (Japan).[1] Canada, France, Japan, South Korea and the UK are signatories to the Wassenaar Arrangement on export controls; China and Israel are not. Uncooled thermal detectors and cameras are now widely available from foreign suppliers, and international supply will continue to expand as new foreign thermal detector manufacturers enter the market.

In contrast to other infrared technologies, commercial demand dominants the market for uncooled thermal devices. Currently, commercial sales represent about ninety percent (90%) of the market by volume[2] with about 55% of demand by value outside North America.[3] The total market value for uncooled thermal cameras is about $1.9 billion, with a forecast of about $2.4 billion by 2019.[4]

With expanding commercial sales for automotive, thermography, security surveillance and consumer smartphones, commercial demand is forecast to account for 95% of all thermal camera sales by 2019.[5]

[1] The World Market for Commercial & Dual-Use Infrared Imaging & Infrared Thermometry, Maxtech International, Inc., 2014.
[2] Uncooled Infrared Imaging Technology & Market Trends, Yole Developpement, July 2014.
[3] The World Market for Commercial & Dual-Use Infrared Imaging & Infrared Thermometry, Maxtech International, Inc., 2014.
[4] Uncooled Infrared Imaging Technology & Market Trends, Yole Developpement, July 2014.
[5] Uncooled Infrared Imaging Technology & Market Trends, Yole Developpement, July 2014.

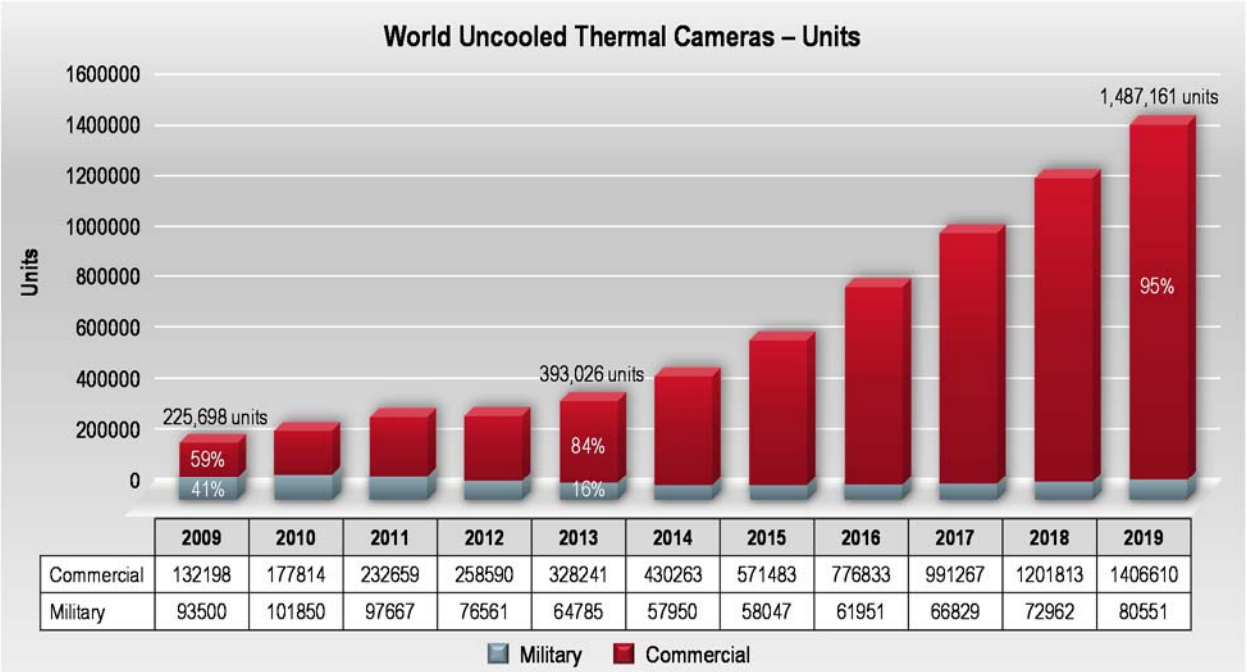

	2009	2010	2011	2012	2013	2014	2015	2016	2017	2018	2019
Commercial	132198	177814	232659	258590	328241	430263	571483	776833	991267	1201813	1406610
Military	93500	101850	97667	76561	64785	57950	58047	61951	66829	72962	80551

Source: Uncooled Infrared Imaging Technology and Market Trends, Yole Developpement, July 2014.

However, in order to meet current and future military challenges in multiple mission areas, the United States must maintain a responsive domestic industrial capacity and a competitive edge in the design and production of advanced thermal detectors and other advanced optical sensors. To achieve the economies of scale required to sustain a domestic industrial base, U.S. manufacturers must compete in the expanding international market for commercial uncooled thermal devices. Commercial volumes will help maintain a U.S. industrial base during periods of low U.S. military demand, assure a surge capability in times of U.S. need; maintain a skilled manufacturing workforce, and assure continued investment in R&D, design and manufacturing efficiencies.

As these items are already commercially available, the control criteria should be revised accordingly to only capture those items that are not in normal commercial use and that provide a significant military or intelligence advantage to the United States such that control is warranted under the ITAR.

Recommendation: The control parameters in proposed Category XII(c)(5) should be revised to:

> *Microbolometer IRFPAs described in paragraph (c)(2) of this category in a permanent encapsulated sensor assembly, having greater than **787,000** detector elements.*

Category XII(c)(6) – Revise definition of multispectral IRFPAs

Raytheon recommends that proposed Category XII(c)(6) multi-spectral IRFPAs be defined as IRFPAs that have multiple detectors to address the different spectral

> bands. Raytheon recommends accomplishing this by including a note to Categories XII(c)(2) and (c)(6).

We suggest multi-spectral IRFPAs be defined as IRFPAs that actually have multiple detectors to address the different spectral bands. For example, an IRFPA with stacked HgCdTe detectors for separate spectral bands. Otherwise, the proposed rule could inadvertently capture a spectrally wide, single IRFPA that could be used with multiple filters to detect different wavelengths.

Recommendation: We recommend a note for Category XII(c)(2) and (c)(6) providing:

> *"Multispectral IRFPAs" do not include IRFPAs with only a single detector that employs filters for spectral selections.*

Category XII(c)(9) – Revise control criteria to avoid controlling commercial items

> Raytheon is concerned that proposed Category XII(c)(9) would control items that are in normal commercial use. Raytheon also noted that these items are currently controlled as dual-use items by the EU Dual-Use List and Wassenaar Arrangement. We recommend revising the control criteria to avoid capturing items that are in normal commercial use.

We interpret the proposed rule to mean that specific cryocoolers, even if exported without an IRFPA, are controlled under the USML. This is inconsistent with other regulatory lists where certain cryocoolers are controlled under a dual-use list (*e.g.*, EU Dual-Use List, Wassenaar Arrangement List of Dual-Use Goods and Technologies) rather than under a military list (*e.g.*, WAML, UK Munitions List, etc.). Foreign manufacturers such as AIM Infrarot-Module and Ricor have products that exceed the technical characteristics identified in proposed Category XII(c)(9)(i). Additionally, these manufacturers are subject to less stringent export controls as cryocoolers are treated as a dual-use item outside the United States.

Typically, tactical application or space-qualified Dewars without IRFPAs are not exported, and as such, our recommendation is to only control those IDCAs which incorporate an IRFPA controlled by (a), (b), or (c) of Category XII. Further, it isn't clear what qualifies as "active cold fingers" since it is not a defined term nor widely recognized in the industry. We understand it could be equivalent to "cryocooler".

Recommendation: Category XII (c)(9) should be revised to read:

Integrated IRFPA dewar cooler assemblies (IDCAs) having any of the following:

(i) Variable or dual aperture mechanisms; or

(ii) Dewars ***containing an IRFPA controlled in paragraphs (a), (b), or (c)*** *of this category;*

Category XII(c)(12) – Revise the control criteria to avoid capturing items appropriately controlled by ECCN 6A003

> Raytheon recommends that proposed Category XII(c)(12) release cameras specially designed for the civilian land vehicles described by ECCN 6A003.b.4. Raytheon notes that these commercial cameras already incorporate an active mechanism to limit diversion risk. We recommend two proposed revisions to the control criteria to avoid capturing these commercial items.

We suggest that ITAR control of weapon shock capable cameras should not apply to cameras specially designed for the civilian land vehicles as described in ECCN 6A003.b.4 Note 3 c. because these commercial cameras already limit diversion risk by incorporating an active mechanism that prevents the camera from functioning when it is removed from the vehicle for which it was intended.

Recommendation: Category XII(c)(12) should be revised to read:

Infrared imaging camera cores (e.g., modules, engines, kits), and specially designed electronics and optics therefor, having any of the following:

(i) An image intensifier tube described in paragraph (c)(1) of this category;

*(ii) Output imagery when subject to more than 20 weapon shock load events of 325 g for 0.4 ms and a microbolometer IRFPA having greater than **787,000** detector elements;*

*(iii) A microbolometer IRFPA described in paragraph **(c)(2)** of this category having greater than **787,000** detector elements;*

(iv) An IDCA described in paragraph (c)(9) of this category, or IDCA parts or components described in paragraph (e)(7) of this category;

*(v) A one-dimensional photon detector IRFPA described in paragraph (c)(2) of this category having a peak response within the wavelength range exceeding **1,200** nm but not exceeding 2,500 nm and greater than 640 detector elements **after TDI**;*

*(vi) A one-dimensional or two-dimensional photon detector IRFPA described in paragraph (c)(2) of this category having a peak response within the wavelength range exceeding 2,500 nm but not exceeding 30,000 nm and greater than 256 detector elements **after TDI**;*

(vii) A one-dimensional photon detector IRFPA described in paragraph (c)(3) of this category;

*(viii) A two-dimensional photon detector IRFPA described in paragraph (c)(2) or (4) of this category having a peak response within the wavelength range exceeding **1,200** nm but not exceeding 2,500 nm, and greater than 111,000 detector elements;*

(ix) A two-dimensional photon detector IRFPA described in paragraph (c)(4) of this category having a peak response within the wavelength range exceeding 2,500 nm but not exceeding 30,000 nm;

(x) A multispectral infrared focal plane array described in paragraph ***(c)(2)*** *of this category; or*
(xi) A charge multiplication IRFPA controlled in paragraph (c)(7) or (8) of this category.

Alternative Recommendation: In the event our recommendation on Category XII(c)(12)(ii) is not adopted, then as an alternative we recommend this provision be revised to read:

(ii) Output imagery when subject to more than 20 weapon shock load events of 325 g for 0.4 ms and a microbolometer IRFPA having greater than 111,000 detector elements; ***provided that this provision shall not apply to cameras specially designed for civilian land vehicles as described in ECCN 6A003.b.4 Note 3 c. of the EAR;***

Category XII(c)(17) – Revise control criteria to avoid controlling commercial items

Raytheon is concerned that proposed Category XII(c)(17) would control millimeter-wave imaging devices that are in normal commercial use. Raytheon notes that the proposed rule would include security screening devices for concealed weapons detection at U.S. and international civilian airports. Raytheon also identifies numerous other civilian applications below for these imaging devices, and notes that the global civilian marketplace for these items is increasing. We recommend revising the control criteria to avoid capturing these commercial items by focusing the parameters at levels not used in civilian applications.

The proposed rule would capture millimeter-wave imaging devices, which have a number of civil applications, including pharmaceutical, biomedical, security, and materials characterization. Millimeter-wave devices represent a potential multi-billion dollar global market.[6] Security screening for concealed weapons detection at U.S. and international airports is the most visible current use of such imaging systems, with an expanding global demand for such public safety screening devices at other public venues. Such systems are available from U.S. and foreign suppliers. The proposed amendment would permit such commercial devices to be controlled under the EAR.

Recommendation: We recommend that Category XII (c)(17) be revised to read:

Terahertz imaging systems or equipment having a peak response in the frequency range exceeding 30 GHz but not exceeding 3000 GHz and having a resolution ***less than 0.1*** *milliradians at a standoff range of 100 m;*

[6] *Millimeter Wave Technology Market by Product and Geography - Forecast to 2020*, MarketsandMarkets, June, 2015.

Category XII(d)(1) Note – Revise to include other Category IV(a) systems

> Raytheon is concerned that the proposed Note to Category XII(d)(1) would introduce duplicate controls. Specifically, Raytheon notes that Category IV(h) is not limited to rocket and flight control and guidance systems as it controls other related guidance systems, such as IV(a)(6) guidance systems. We recommend revising the note accordingly to capture all rocket and flight control and guidance systems articles within Category IV(a).

As written, the proposed Category XII(d)(1) will introduce duplicate controls. Note to Category XII(d)(1) reads as follows:

> *For aircraft and unmanned aerial vehicle guidance or navigation systems, see USML Category VIII(e). For rocket or missile flight control and guidance (including guidance sets), see USML Category IV(h).*

Raytheon notes that Category IV(h)(1) controls rocket and missile flight control and guidance systems. However, Category IV is not limited to only rockets and missiles as it also captures flight control and guidance systems for other Category IV(a) systems. For example, a Category IV(a)(6) bomb flight control system is controlled under Category IV(h)(1).

Recommendation: We recommend changing the note to Category XII(d)(1) to read as follows:

> *For aircraft and unmanned aerial vehicle guidance or navigation systems, see USML Category VIII(e). For flight control and guidance (including guidance sets) for any USML Category IV(a) article, see USML Category IV(h).*

Category XII(e)(3) – Revise or Delete entry as it would control items in normal commercial use

> Raytheon recommends the revision or deletion of proposed Category XII(e)(3). Raytheon notes that imposing new controls on wafers being produced in U.S. foundries will increase costs for U.S. suppliers.

U.S. foundries maintain technology control plans for properly handling ITAR-controlled technical data. However, the proposed rule could be interpreted to require additional controls on the actual wafers that are in the foundries' normal commercial processing flow. Restricting access to wafers in U.S. foundries would impose new costs on U.S. suppliers.

In order to remain competitive, U.S. businesses must keep costs low which may be difficult given the shrinking supplier base for wafers. As defense budgets shrink, U.S. foundries are becoming more reluctant to deal with smaller orders of business that come with significant risks attached. It's possible that control of wafers could eliminate U.S. foundries from competing in this market.

Recommendation: We recommend this entry be revised or deleted.

Category XII(e)(4) and (e)(5) – Combine and revise these entries

> Raytheon recommends combining proposed Categories XII(e)(4) and (e)(5). Raytheon notes that these items are commercially available today and do not provide a military advantage to the United States such that controls under the ITAR are warranted. Combining these two entries would more appropriately control those items on the USML that do provide a significant military advantage to the United States while not injuring domestic manufacturers of commercial items.

In order to remain competitive, U.S. businesses must keep costs low which may be difficult given the shrinking supplier base for wafers. As defense budgets shrink, U.S. foundries are becoming more reluctant to deal with smaller orders of business that come with significant risks attached. Shifting control to the EAR will allow suppliers more flexibility and encourage them to continue to do business with U.S. defense contractors.

As such, controlling these items on the USML is inconsistent with the states objectives of Export Control Reform. Specifically, these items are in normal commercial use and they do not provide a significant military or intelligence advantage to the United States.

Recommendation: We recommend Category XII(e)(4) and (e)(5) be combined and provide as follows:

> *Read-Out Integrated Circuits (ROICs) specially designed for an IRFPA controlled in* ***USML Category XII(c).***

We also recommend the Note to paragraph (e)(4) be revised so as to provide:

> ***ROICs not*** *specially designed for an IRFPA controlled in* ***USML Category XII(c) are subject to the EAR.***

Category XII(e)(6) – Delete entry as it would control items in normal commercial use

> Raytheon is concerned that proposed Category XII(e)(6) would control vacuum packages and other sealed enclosures that are in normal commercial use. Raytheon cites numerous civilian applications for these imaging devices below; and notes that the global civilian marketplace is increasing and that some of the underlying technology is in the public domain. We recommend deleting this entry.

Vacuum packages and other sealed enclosures do not warrant control under the USML because they do not provide any significant military or intelligence advantage to the United States. Vacuum packages or other sealed enclosures are used with IRFPAs in civil applications (automotive

sensors, astronomy telescopes, mobile phones cameras, etc.) which, if controlled, would impact the commercial markets for U.S. companies in the future. Foreign competitors are not subject to the same controls on vacuum packages or other sealed enclosures since they are not identified on the Wassenaar Arrangement Munitions List or Dual-Use Goods and Technologies List, UK Control Lists, or EU Regulations.

Additionally, some of the technology associated with vacuum packages or other sealed enclosures that would be ITAR-controlled under the proposed rule has entered the public domain in patents, published patent applications, and other published patent documents filed with the US Patent and Trademark Office.

Issued Patents	
Publication Number	Description
6,479,320	Vacuum package fabrication of microelectromechanical system devices with integrated circuit components
6,521,477	Vacuum package fabrication of integrated circuit components
5,895,233	Integrated silicon vacuum micropackage for infrared devices
8,608,894	Wafer level packaged focal plane array
8,454,789	Disposable bond gap control structures
8,393,526	System and method for packaging electronic devices
8,736,045	Integrated bondline spacers for wafer level packaged circuit devices
8,980,676	Fabrication of window cavity cap structures in wafer level packaging

Published Patent Documents		
ID Number	Description	Patent Filing Number
10-1044	In-situ Plasma Reduction of Tin Oxide for WLP MEMS	61/410454
10-1209	Method to prevent solder wetting to reference pixel shield	61/405621
11-2315	Integrated Bondline Spacers for Wafer Level Packaged Circuit Devices	14/456156
11-2316	Method of Stress Relief in AR Coated Cap Wafers for Wafer Level Packaged IR FPAs	61/692491
12-3287	Vacuum Getter Structure for Wafer Level Packaged MEMS Devices	13/721545
12-3896	Method of forming a patterned coating on a surface without photolithography or masking	14/100048
12-3389	Solder Barrier as Getter in WLP MEMS Package	13/939400

Recommendation: We recommend that Category XII(e)(6) be deleted.

Category XII(e)(7) – Delete entry as it would control items in normal commercial use

> Raytheon is concerned that proposed Category XII(e)(7) would control cryocoolers and related items that are in normal commercial use. Raytheon recommends deleting this entry and, instead, controlling these items within ECCN 6A615.

Cryocoolers and their related parts and components are currently available outside of the United States and are made by foreign manufacturers such as AIM Infrarot-Module and Ricor. Some of these products, such as the SL150 and K353, exceed the technical parameters identified in proposed Category XII (c)(9)(i).

Parts and components for such cryocoolers are not controlled under the Wassenaar Munitions List.

As such, controlling these items on the USML is inconsistent with the states objectives of Export Control Reform. Specifically, these items are in normal commercial use and they do not provide a significant military or intelligence advantage to the United States.

Recommendation: We suggest Category XII(e)(7) be deleted and the referenced parts and components be classified under ECCN 6A615.

Category XII(e)(9) – Coatings and impact on applying specially designed releases

> Raytheon requests clarification within proposed Category XII(e)(9) that the application of a coating, once applied and dried to an item, does not by itself change the jurisdiction of the item. Raytheon notes that this clarification would be consistent with recent guidance by the Department that CARC coatings applied and dried to an item do not, by itself, change the jurisdiction of the item. We recommend including a note to this section in order to provide clarity this point.

DDTC's guidance on performance enhancing coatings has set precedence that even if the coating is itself ITAR controlled, it does not impact the specially designed status of an article unless they provide a unique military capability. See https://www.pmddtc.state.gov/faqs/ecr.html regarding CARC coatings.

CARC coatings that are otherwise subject to Category XIV(f)(5) fundamentally improves the "performance" of the article in question and therefore the article would normally not qualify under release of specially designed ITAR §120.41(b)(3). As such, DDTC has taken the position that performance enhancing coatings do not change the control of the article.

One of the central goals of Export Control Reform is to promote consistent interpretations. Therefore, proposed Category XII(e)(9) should be consistent with DDTC's interpretation of performance enhancing coatings not impacting specially designed status.

If we take a commercial optics and apply a coating, such as an anti-reflective coating, based on DDTC's precedence the optics would not be specially designed under proposed Category XII(e)(9).

Recommendation: In order to be clear and consistent with past guidance we recommend adding a note to Category XII(e)(9) as follows:

> *Note to paragraph (e)(9): The application of a coating, once applied and dried to the item, to modify performance does not qualify the article as specially designed under this paragraph.*

Category XII(e) and (f) – Revise SME designation on technical data and classified articles

> Raytheon notes that it appears the SME designations for classified articles and technical data are incorrect in these proposed paragraphs. As currently proposed, technical data is designated as significant military equipment but classified articles are not. We recommend revising these entries so that technical data is not designated significant military equipment but classified articles are so designated.

As currently proposed, Category XII(f) for technical data is designated as SME. Also, proposed Category XII(e)(15) for classified articles is not designated as SME. This contradicts the treatment of such items in every other USML category. We believe the SME designations were meant to be reversed.

Recommendation: Revise proposed Category XII(e)(15) to be designated as SME in conformance with ITAR § 120.7(b)(2) and revise proposed Category XII(f) to be non-SME in conformance with every other USML category.

Category XII(f), Note 1 to paragraph (f) – Revise to clarify scope and reduce complexity

> Raytheon is concerned that the proposed Note 1 to Category XII(f) would add an unnecessary element of complexity and could result in attempts by manufacturers to create "ITAR-free" models. We recommend revising the note to clarify that only information that is required to meet controlled performance levels, characteristics, or functions remains subject to the ITAR.

The language of the proposed rule specifying that technical data and defense services "*remain subject to the ITAR even if the technical data or defense services could also apply to items subject to the EAR*" adds an unnecessary element of complexity for U.S. exporters. In order to assure compliance, U.S. exporters may consider it advisable to seek review and approval from two separate U.S. regulatory agencies before exporting technical information related to EAR items. This could also be problematic for U.S. manufacturers of ITAR controlled articles that rely on U.S.

component suppliers who may prefer to move to an "ITAR-free" model in order to avoid ITAR compliance costs and risks. "Required" is currently defined under the EAR.

Although the Department has proposed a definition of "Required" within the ITAR, this comment is still relevant because the proposed ITAR definition of "Required" is not yet final and it may be possible that Category XII becomes effective before the proposed definition. As such, DDTC could accept the recommendations here as a temporary placeholder until the ITAR definition of "Required" becomes final.

Recommendation: We recommend this note be revised to read:

> *Technical data and defense services directly related to image intensifier tubes and specially designed parts and components therefor controlled in paragraph (c)(1) of this category, infrared focal plane arrays (IRFPAs) and detector elements therefor controlled in paragraph (c)(2) of this category, integrated IRFPA dewar cooler assemblies (IDCAs) controlled in paragraph (c)(9) of this category, wafers incorporating IRFPA or ROIC structures controlled in paragraph (e)(3) of this category, and specially designed readout integrated circuits (ROICs) controlled in paragraphs (e)(4) and (5) of this category, remain subject to the ITAR;* ***provided that such technical data and services refer only to that portion of the information "required" to achieve or exceed the ITAR controlled performance levels, characteristics, or functions, and shall not apply to technology for items subject to the EAR.***

Category XII(f), Note 2 to paragraph (f) – Revise to clarify scope and reduce complexity

> Raytheon is concerned that the proposed Note 2 to Category XII(f) would add an unnecessary element of complexity that could result in manufacturers developing "ITAR-free" models to avoid this control. We recommend revising the note to clarify that only software or information that is required to meet controlled performance levels, characteristics, or functions remains subject to the ITAR.

Although the DDTC recently proposed a definition of "Required" within the ITAR, this comment is still relevant because the proposed ITAR definition of "Required" is not yet final and it may be possible that Category XII becomes effective before the proposed definition. As such, the Department could accept the recommendations here as a temporary placeholder until the ITAR definition of "Required" becomes final.

The proposed rule provides that software and technical data that includes design or manufacturing process descriptions for IRFPAs and detector elements is controlled in (c)(2). Including "detector elements" could make basic technology for an EAR controlled IRFPA ITAR controlled.

For example, the pixel element technology for a microbolometer IRFPA is typically the same regardless of the whether it is for a large array controlled under the ITAR or a small array controlled under the EAR. The technology that is required for a large array ITAR controlled

microbolometer IRFPA is in the design and manufacturing processes for the ROIC, wafer level package, and hybridization, rather than in the pixel or detector element.

Recommendation: We recommend this note be revised by adding the following:

Provided that such software and technical data refer only to that portion of the information "required" to achieve or exceed the ITAR controlled performance levels, characteristics, or functions, and shall not apply to software or technology for items subject to the EAR.

Category XII(f) Note to paragraph A of note 2 to paragraph (f) – Revise to clarify scope and reduce complexity

Raytheon is concerned that the proposed Note to Paragraph A of Note 2 to Category XII(f) would add an unnecessary element of complexity and could promote "ITAR-free" models to avoid this control. We recommend revising the note to clarify that the note applies to items subject to the ITAR.

Recommendation: We recommend this note be revised to read:

Technical data does not include information directly related to basic operating instructions, testing results, incorporating or integrating IRFPAs into higher level packaged assemblies not enumerated in this category, or external interface control documentation associated with such assemblies ***subject to this subchapter*** *or assemblies subject to the EAR, provided such information does not include design methodology, engineering analysis, or manufacturing know-how for a USML controlled IRFPA.*

Thank you for the opportunity to present Raytheon's views concerning Category XII.

If you have any questions concerning this submission, please contact Karl Abendschein, Senior Manager, Global Trade Compliance, at karl.abendschein@raytheon.com or (703) 284-4275 or the undersigned at julia.court.ryan@raytheon.com.

Sincerely,

Julia Court Ryan
Senior Counsel
Global Trade Compliance, Governance

Karl Abendschein
Senior Manager
Global Trade Compliance, Governance

ATTACHMENT A

RIN 1400-AD32: Proposed Revisions to USML Category XII

July 6, 2015

Via Email

Mr. Dennis Krepp
Office of National Security
and Technology Transfer Controls
Bureau of Industry and Security
U.S. Department of Commerce
14th Street and Pennsylvania Ave., NW
Washington, DC 20230

Email: publiccomments@bis.doc.gov

Reference: RIN 0694-AF75

Subject: Review of Fire Control, Range Finder, Optical, and Guidance and Control Equipment No Longer Warranting Control under the U.S. Munitions List

Dear Mr. Krepp:

Raytheon Company ("Raytheon") respectfully submits the following comments on the proposed changes to the Commerce Control List ("CCL"), 15 C.F.R. §774, Supplement No. 1, set forth in the Bureau of Industry and Security's notice of proposed rulemaking entitled, *Control of Fire Control, Range Finder, Optical, and Guidance and Control Equipment the President Determines No Longer Warrant Control Under the U.S. Munitions List*, 80 Fed. Reg. 25,798 (May 5, 2015). We applaud your Office's tireless efforts in bringing Export Control Reform to fruition. Based upon our extensive experience as a manufacturer and exporter of fire control, range finder, optical, and guidance and control equipment, we would like to draw the attention of BIS to those proposed entries on the CCL that require clarification or may be overly broad.

Please see our detailed comments below. In addition, Raytheon's comments to the Bureau of Industry and Security's companion proposed rule titled, *Amendment to the International Traffic in Arms Regulations: Revision of U.S. Munitions List Category XII*, 80 Fed. Reg. 25821 (May 5, 2015) are provided for your reference in **Attachment A**.

EAR § 772.1 – Clarify the meaning of "permanent encapsulated sensor assembly"

Raytheon requests clarification on the requirement and definition of "permanent encapsulated sensor assembly" within Export Administration Regulations ("EAR") §772.1. Raytheon believes that the definition should apply to packaged detectors and not to higher level integrations incorporating camera electronics. In addition,

> protection schemes requirements should not apply to microbolometer infrared focal plane arrays ("IRFPAs") that are already widely available on the commercial marketplace. Therefore, we recommend revising the control criteria to avoid capturing these commercial items.

We request additional clarification on the requirement and definition of "permanent encapsulated sensor assembly." It is unclear if a "permanent encapsulated sensor assembly" means a packaged detector only or a higher level of integration incorporating camera core electronics. Additionally it is unclear if some additional protection scheme is required to "prevent direct access", disassembly, and removal of the IRFPA. Any article may ultimately be reverse engineered with sufficient time and resources.

We recommend that such a requirement may not be necessary for those IRFPAs that are currently widely available in the global commercial market.

We recommend that a definition of "permanent encapsulated sensor assembly" be added to EAR §772.1 as follows:

> *A permanent encapsulated sensor assembly (e.g. sealed enclosure, vacuum package, or wafer level packaged detector) is one that makes the assembly inoperable if subjected to typical commercial disassembly.*

ECCN 6E001 and 6E002 Related Controls – Recommend revisions to narrow the controls

> Raytheon recommends revising the proposed language in the paragraph 3 of the "Related Controls" to Export Control Classification Numbers ("ECCNs") 6E001 and 6E002. Raytheon notes that the intent of these controls appears to be on technology related to the removal of a "permanent encapsulated sensor assembly." The commenting party requested revisions to limit the scope of the proposed controls.

We believe that the intent of these proposed provisions is to control technology related to the removal of a "permanent encapsulated sensor assembly," and believe that the proposed language is overly broad and unnecessary in achieving the intended level of control. For example, the types of information listed in paragraph 3 (e.g., "mechanical dimensions and physical characteristics of the sensor assembly") related to integration are generally in the public domain and published by manufacturers in their in marketing materials.

We recommend that paragraph (3) of the Related Controls section of both 6E001 and 6E002 be revised as follows to more properly focus on removing the controlled items:

> *(3) Technology **"required"** for **removing** a "permanent encapsulated sensor assemblies" subject to the EAR, or **removing** such assemblies **from** an item subject to the EAR, and **removing** image intensifier tubes ("IITs") **from** an item subject to the EAR, including*

> ***removing*** *items subject to the EAR* ***from*** *foreign military commodities outside the United States is subject to the EAR. This technology includes the testing results, operation instructions for a focal plane array* ***removed from*** *a "permanent encapsulated sensor assembly" subject to the EAR, mechanical dimensions and physical characteristics of the sensor assembly provided such information does not include design methodology, engineering analysis, or manufacturing know-how "****required" to operate the removed IRFPAs.***

ECCN 6E990 Technology related to ROICs – Recommend adding a clarifying note

> Raytheon recommends revising the controls to proposed ECCN 6E990 regarding read-out integrated circuits ("ROICs") to limit the scope of the proposed controls to exclude standard commercial foundry designs. Raytheon notes that technology related to standard commercial foundry design or production technology used for ROICs is already available in the commercial marketplace.

Technology related to standard commercial foundry design or production technology utilized for ROICs may not require specific controls considering the foreign availability of standard ROIC products.

ECCN 6E990 would make the design rules and production technology for ROICs subject to substantially tighter control than EAR99, which is currently the case. This technology captured in the new ECCN would include the standard production design rules used in any semiconductor factory. In order to develop or produce these commodities, the product requires design rules from the integrated circuit factory. These commercial design kits, known as process design kits (PDKs"), would now become subject to this much tighter control since they are used in the development and production of this controlled technology. Examples of technology that would now be subject to this control can be found in the following proprietary design manuals from these representative suppliers: SAMSUNG (LN28LPP Technology Design manual), ON Semiconductor (ONC18 PHYSICAL DESIGN RULES), Tower Jazz Semiconductor (CA18 and CR18 Design Rules).

We recommend adding a note to ECCN 6E990 as follows:

> *Technology related to standard commercial foundry designs or production technology utilized for all read-out integrated circuits is not controlled.*

ECCN 6E994 Technology for maintenance, repair, or overhaul of controlled items

> Raytheon recommends revising the controls to proposed ECCN 6E994 to exclude control technology used for both EAR99 items and items controlled with ECCNs of 6A002, 6A003, or 6A990.

We suggest that technology used for both EAR99 controlled items and 6A002, 6A003 or 6A990 controlled items should not be subject to the controls of 6E994. The requirement as proposed is very broad in scope and could capture basic technology for maintenance, repair and overhaul of EAR99 items. We recommend adding a note to ECCN 9E994 excluding technology also used in connection with EAR99 items.

We recommend adding a note as follows:

> *Technology related to maintenance, repair, or overhaul of commodities* ***not*** *controlled under 6A002, 6A003, or 6A990 but that can also be applied to or used for commodities controlled under 6A002, 6A003, or 6A990 is not controlled under 6E994.*

Thank you for the opportunity to present Raytheon's views concerning the proposed revisions to the CCL.

If you have any questions concerning this submission, please contact Karl Abendschein, Senior Manager, Global Trade Compliance, at karl.abendschein@raytheon.com or (703) 284-4275 or the undersigned at julia.court.ryan@raytheon.com.

Sincerely,

Julia Court Ryan
Senior Counsel
Global Trade Compliance, Governance

Karl Abendschein
Senior Manager
Global Trade Compliance, Governance

ATTACHMENT A

RIN 0694-AF75: Proposed Revisions to the EAR

ATTACHMENT A

RIN 1400-AD32: Proposed Revisions to USML Category XII

THORLABS

1064 nm Pigtailed DBR Laser Diode, 20 mW

DBR1064S

Description

Thorlabs' DBR1064S Distributed Bragg Reflector (DBR) laser is a single-frequency laser diode that is well-suited for fiber amplifier seeding, second harmonic generation, gain switching, and low-noise pump applications. The DBR1064S includes an integrated optical isolator, thermo-electric cooler (TEC), thermistor, and monitor photodiode. It is packaged in a 14 pin butterfly package with HI1060 single mode optical fiber and an FC/APC connector.

Specifications

DBR1064S	
LD Reverse Voltage (Max)	2 V
Absolute Max Current	200 mA
Absolute Max Power	50 mW
PD Reverse Voltage (Max)	15 V
Operating Temperature	0 to 50 °C
Storage Temperature	-10 to 65 °C

T_{CHIP} = 15 – 35 °C, T_{BASE} = 25 °C, I_{OP} = 150 mA

DBR1064S				
	Symbol	Min	Typical	Max
Center Wavelength	λ_C	1062 nm	1064 nm	1066 nm
Laser Linewidth	Δv	-	10 MHz	-
Output Power CW @ I_{OP}	P_{OP}	20 mW	-	-
Operating Current	I_{OP}	-	150 mA	200 mA
Mode Hop Range[a]	$\Delta I_{Mode\text{-}Hop}$	-	-	10 mA
Mode Hop Free Range[b]	$\Delta I_{Mode\text{-}Hop\text{-}Free}$	50 mA	-	-
SMSR in Mode Hop Free Range	SMSR	30 dB	50 dB	-
Threshold Current	I_{TH}	-	35 mA	-
Forward Voltage	V_F	-	2.0 V	2.5 V
Slope Efficiency	$\Delta P/\Delta I$	-	0.25 W/A	-
Current Tuning @ I_{OP}	$\Delta\lambda/\Delta I$	-	0.002 nm/mA	-
Temperature Tuning @ I_{OP}	$\Delta\lambda/\Delta T$	-	0.08 nm/°C	-
Monitor Diode Responsivity @ I_{OP}	I_{MON}/P	-	10 µA/mW	-
Internal Isolator Isolation	ISO	32 dB	-	-

a. Extent of mode hop transition region between single frequency operating points.

b. Continuous tuning range between mode hops.

Specifications Subject to Change without Notice

January 20, 2014
QTN006314-S01, Rev A

DBR1064S TEC Operation				
	Symbol	Min	Typical	Max
TEC Current	I_{TEC}	-	0.1 A	1.5 A
TEC Voltage	V_{TEC}	-	2.8 V	4.0 V
Thermistor Resistance @ 25 °C	R_{TH}	-	10 kΩ	-

Typical Performance Plots

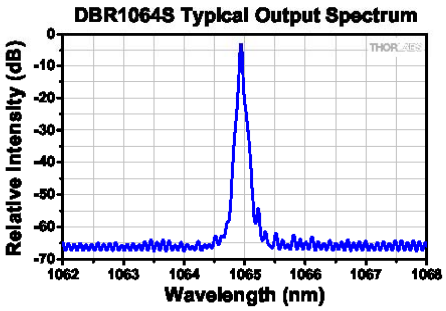

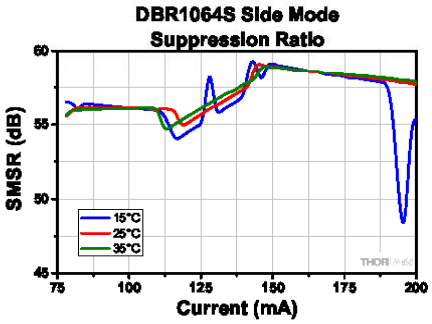

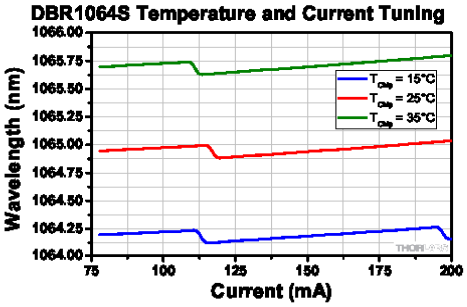

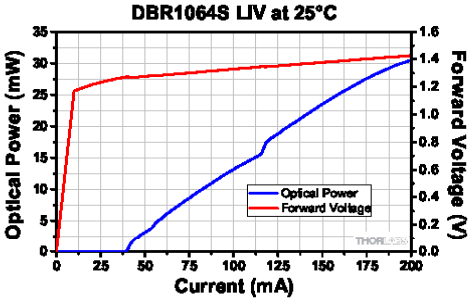

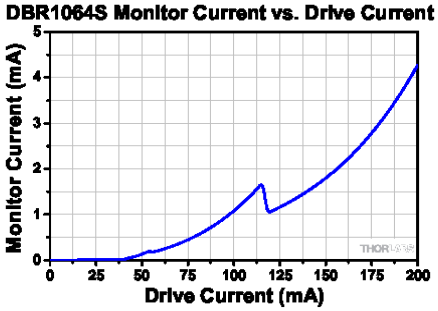

Drawings

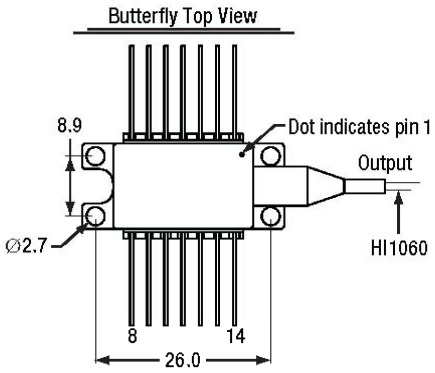

PIN IDENTIFICATION	
1. TEC +	14. TEC -
2. Thermistor	13. Case
3. PD Anode	12. NC
4. PD Cathode	11. LD Cathode
5. Thermistor	10. LD Anode
6. NC	9. NC
7. NC	8. NC

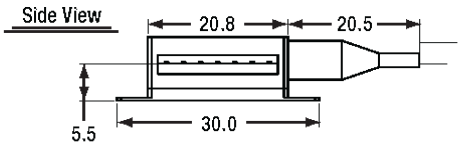

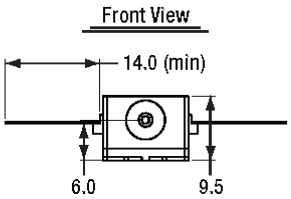

All Dimensions in mm

ATTACHMENT C

DATASHEET
Photon Detection

YAG series – YAG-444-4AH, YAG-444N-4AH and YAG-555-4AH quadrants

Silicon PIN Quadrant Detector

The YAG series high-performance Si PIN photodiodes are well-suited for applications such as munition guidance, laser spot tracking and others.

Excelitas Technologies' YAG series of Silicon PIN quadrant detectors are high-performance N-type or P-type Si PIN photodiodes in hermetically sealed TO packages. These photodiodes perform well over the 400 nm to 1100 nm wavelength range, with enhanced IR responsivity, making them ideal for 1064 nm detection applications.

A guard ring collects current generated outside the active area, ensuring the current will not contribute to noise.

The YAG-444-4AH, YAG-444N-4AH, and YAG-555-4AH are quadrant photodiodes with circular active area with four pie-shaped quadrant sections created from the doping process, each with an isolated signal lead. There is no "dead" space between the elements.

Recognizing that different applications have different performance requirements, Excelitas offers a wide range of customization of these photodiodes to meet your unique design challenges. Various active area, custom device testing/qualification and packaging options (hermetic metal can, high-shock resistance packaging, ceramic carrier, custom pin-out configuration, heater-options, etc.) are among many of the application specific solutions available.

Key Features and Benefits

- High quantum efficiency at 1064 nm
- Wide spectral range
- Crosstalk <1% between elements
- No "dead zones" between quadrants
- Linearity over wide dynamic range
- Oxide passivated
- Planar diffused structure
- Operation temperature: -55 to 125˚C
- Package style: TO-36
- RoHS-compliant
- Available in N- and P-type configuration
- Available with lead-solder

Applications

- Laser spot tracking
- Munition guidance
- Laser seeker head
- Semi-Active Laser (SAL) sensor

EXCELITAS® TECHNOLOGIES

YAG-444-4AH, YAG-444N-4AH and YAG-555-4AH

Silicon PIN Quadrant Detector

Table 1 – Operating data and specifications at 23°C (typical performance at 180V voltage bias)

	YAG-444-4AH			YAG-444N-4AH PRELIMINARY			YAG-555-4AH			
Parameter (See notes 1 and 2)	**Min**	**Typical**	**Max**	**Min**	**Typical**	**Max**	**Min**	**Typical**	**Max**	**Units**
Number of elements	4			4			4			
Active area (per element)		25			25			39		mm^2
Active area, overall diameter		11.5			11.5			14.1		mm
Spectral range	400-1150									nm
Responsivity (See Figure 2) at 900 nm at 1064 nm		 0.60 0.44			 0.60 0.44			 0.60 0.44		A/W
Bandwidth, 50Ω load		60						60		MHz
Rise time		12			12			12		ns into 50Ω
Operating voltage (V_{op})		0-180			0-180			0-180		V
Breakdown voltage (V_{br})	200			200			200			V
Wafer type (See Figure 3) Bias configuration	P-type Common Anode			N-type Common Cathode			P-type Common Anode			
Capacitance		9	15		9	15		12	20	pF
Dark current (I_d)		30	100		30	100		50	150	nA
Channel resistance		>1			>1			>1		MΩ
Series resistance		320						320		Ω
Noise current		0.20			0.10			0.20		pA/√Hz
Noise equivalent power (NEP) 900 nm, 1 MHz 1064 nm, 1MHz		 0.25 0.30			 0.20 0.25			 0.25 0.30		pW/√Hz
Response linearity		<1%			<1 %			<1%		Over 7 decades
Crosstalk		<1%			<1 %			<1%		
Field of View (See Figure 1) Nominal field of view α Nominal field of view α'		 110 160			 110 160			 85 162		degrees

Notes:

1. Active area and all characteristics are listed per element.
2. Breakdown voltage (V_{br}) measurement at 100 µA dark current (I_d), in appropriate polarity depending on wafer type

Figure 1 – Approximate field of view

For incident radiation at angles $\leq \alpha/2$, the photosensitive surface is totally illuminated.
For incident radiation at angles $> \alpha/2$, but $\leq \alpha'/2$, the photosensitive surface is partially illuminated

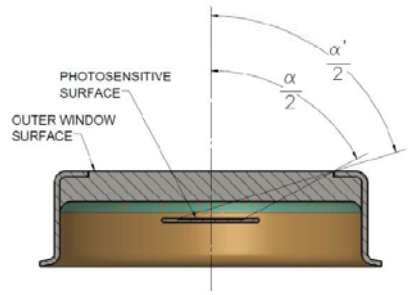

Silicon PIN Quadrant Detector

Figure 2 – Typical Spectral Response

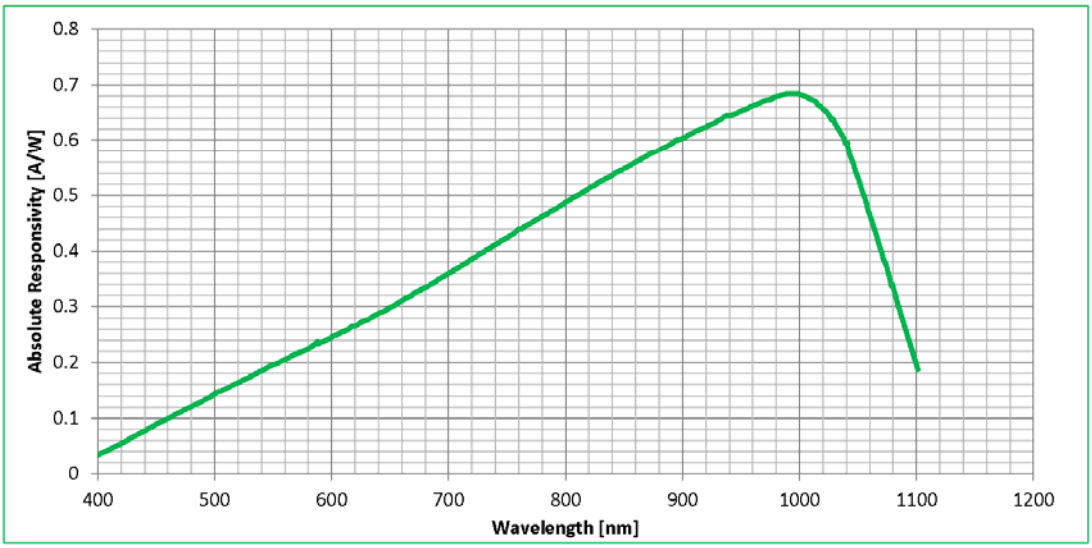

Figure 3 – Package Dimensions and Pin Assignment

Reference only and subject to change without notice

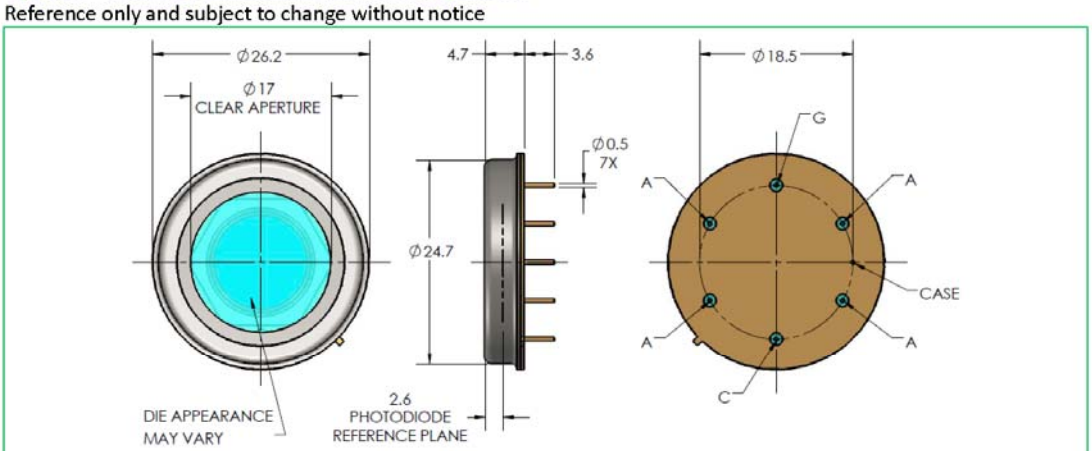

WAFER TYPE	PIN A	PIN C	PIN G
P-TYPE	ACTIVE CATHODE	COMMON ANODE	GUARD RING CATHODE
N-TYPE	ACTIVE ANODE	COMMON CATHODE	GUARD RING ANODE

DIMENSIONS ARE IN MILLIMETERS
VS-362R2

Export controls

Due to specific features some items may be subject to international export controls and may not be exported without official authorization.

RoHS Compliance

The YAG-series of quadrant detectors is designed and built to be fully compliant with the European Union Directive 2011/65/EU – Restriction of the use of certain Hazardous Substances (RoHS) in Electrical and Electronic equipment.

Warranty

A standard 12-month warranty following shipment applies. Any warranty is null and void if the photodiode window has been opened.

About Excelitas Technologies

Excelitas Technologies is a global technology leader focused on delivering innovative, customized solutions to meet the lighting, detection and other high-performance technology needs of OEM customers.

Excelitas has a long and rich history of serving our OEM customer base with optoelectronic sensors and modules for more than 45 years beginning with PerkinElmer, EG&G, and RCA. The constant throughout has been our innovation and commitment to delivering the highest quality solutions to our customers worldwide.

From aerospace and defense to analytical instrumentation, clinical diagnostics, medical, industrial, and safety and security applications, Excelitas Technologies is committed to enabling our customers' success in their specialty end-markets. Excelitas Technologies has approximately 3,000 employees in North America, Europe and Asia, serving customers across the world.

Excelitas Technologies
22001 Dumberry Road
Vaudreuil-Dorion, Quebec
Canada J7V 8P7
Tel.: (+1) 450.424.3300
Toll-free: (+1) 800.775.6786
Fax: (+1) 450.424.3345
detection.na@excelitas.com

Excelitas Technologies
GmbH & Co. KG
Wenzel-Jaksch-Str. 31
D-65199 Wiesbaden
Germany
Telephone: (+49) 611 492 430
Fax: (+49) 611 492 165
detection.europe@excelitas.com

Excelitas Technologies
Singapore, Pte. Ltd.
8 Tractor Road
Singapore 627969
Telephone: (+65) 6775 2022
Telephone: (+65) 6770 4366
(Customer Service)
Fax: (+65) 6778-1752
detection.asia@excelitas.com

Excelitas Technologies
International Sales Office
Bat HTDS BP 246, 91882
Massy Cedex
France
Telephone: +33 (1) 6486 2824
europedefense@excelitas.com

For a complete listing of our global offices, visit www.excelitas.com/locations

© 2014 Excelitas Technologies Corp. All rights reserved. The Excelitas logo and design are registered trademarks of Excelitas Technologies Corp. All other trademarks not owned by Excelitas Technologies or its subsidiaries that are depicted herein are the property of their respective owners. Excelitas reserves the right to change this document at any time without notice and disclaims liability for editorial, pictorial or typographical errors.

ATTACHMENT D

First Sensor

First Sensor QP Data Sheet
Part Description QP154-Q TO
Order # 50131305
Version 07-07-14

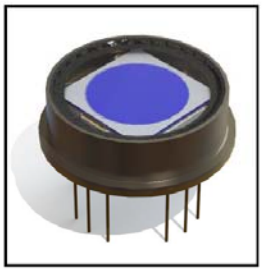

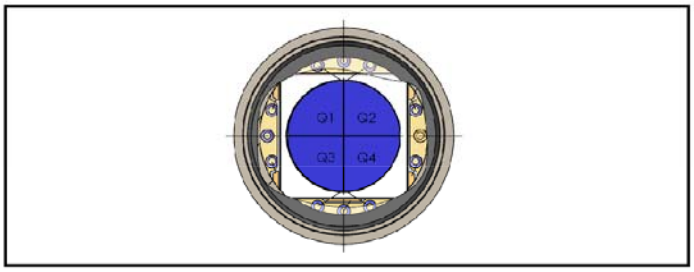

Features

- Quadrant detector
- Low dark current
- Fast rise time, low capacitance
- High QE at 1064 nm
- Including heater and temperature sensor

Description

Circular active area quadrant PIN detector with 14 mm diameter and 70 µm gaps, optimized for 1064 nm. Metal can type hermetic, isolated TO package with ceramic heater and flat clear glass window.

Application

- 1064 nm laser detection
- High speed photometry
- NIR pulsed light sensor
- Laser guidance

RoHS

2002/95/EC

Absolute maximum ratings

Symbol	Parameter	Min	Max	Unit
T_{STG}	Storage temp	-55	125	°C
T_{OP}	Operating temp	-40	85	°C
V_{OP}	Operating voltage		250	V
I_{PEAK}	Peak DC current		10	mA
p	Outside pressure		5	bar

Spectral response (23 °C)

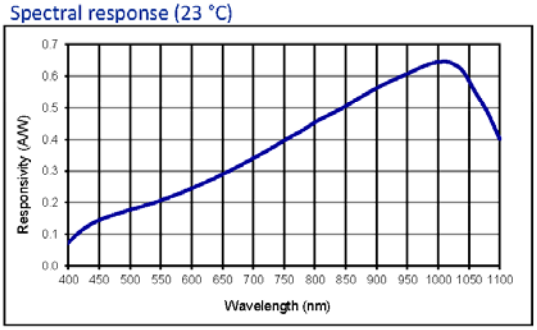

Electro-optical characteristics @ 23 °C

Symbol	Characteristic	Test Condition	Min	Typ	Max	Unit
	Active area	diameter		14		mm
		per element, number of elements: 4 quadrants		38.5		mm^2
	Gap	between elements		70		µm
I_D	Dark current	V_R = 150 V, per element		10	30	nA
C	Capacitance	V_R = 150 V, per element		14	20	pF
	Responsivity	V_R = 150 V; λ = 1064 nm; R_L = 50 Ω	0.42	0.48	0.65	A/W
t_R	Rise time	V_R = 180 V; λ = 1064 nm; R_L = 50 Ω		12		ns
		180 V; 1064 nm; TIA terminated (R_L = 1 Ω)		6		ns
V_{BR}	Breakdown voltage	I_R = 2 µA	250			V
	Temperature coefficiant	Change of I_{PH} with temperature		1.07		%/K
	Cross talk	V_R = 150 V; λ = 1064 nm; R_L = 50 Ω		2		%
	Heating time	23°C to 70°C with 21V power supply	5	6	7	s
	Heater resistance	23°C	36	40	44	Ω
	Temp. sensor resistance	PTC, TK = 3500 ± 200 ppm/K	9950	10000	10050	Ω
	N.E.P.	V_R = 150 V, λ = 1064 nm		1.2E-13		W/√Hz
FOV	Field of view			± 75		°

European, International Sales:
First Sensor
First Sensor AG
Peter-Behrens-Strasse 15
12459 Berlin
Germany
T +49 30 6399 2399
F +49 30 639923-752
sales.opto@first-sensor.com

USA:
First Sensor
First Sensor Inc.
5700 Corsa Avenue #105
Westlake Village
CA 91362 USA
T +1 818 706 3400
F +1 818 889 7053
sales.us@first-sensor.com

Quantum efficiency (23 °C)

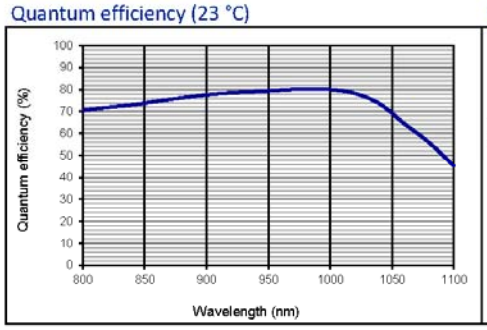

Capacitance as fct of reverse bias (23 °C)

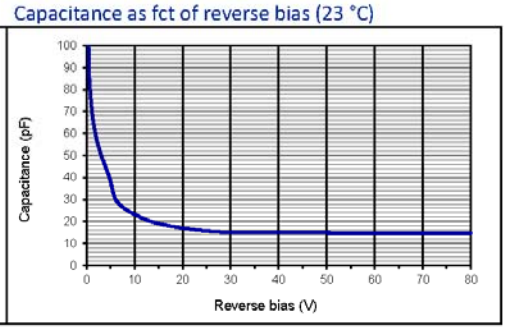

Dark current as fct of bias (23 °C)

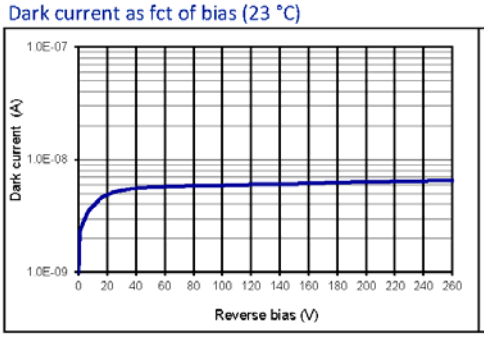

Responsivity at 1064 nm as fct of temperature

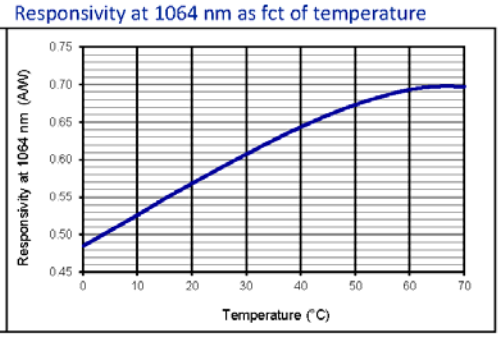

Heater performance (23 °C, 21 V)

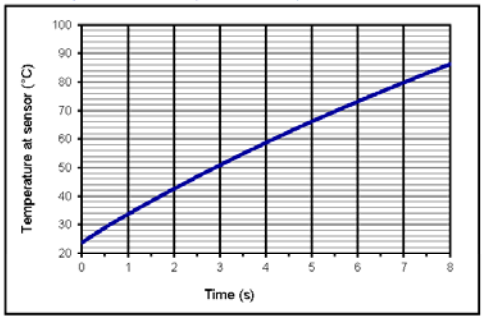

Package dimension:

Small quantities: Foam pad, boxed (12 cm x 16.5 cm)

Source of origin:

This detector and its components are manufactured in Germany.

European, International Sales:

First Sensor

First Sensor AG
Peter-Behrens-Strasse 15
12459 Berlin
Germany
T +49 30 6399 2399
F +49 30 639923-752
sales.opto@first-sensor.com

USA:

First Sensor

First Sensor Inc.
5700 Corsa Avenue #105
Westlake Village
CA 91362 USA
T +1 818 706 3400
F +1 818 889 7053
sales.us@first-sensor.com

Technical Drawing

pin assignment

pin	1	2	3	4	5	6	7	8	9	10	11	12
connection	case	heater 1	Q2	n. c.	Q1	T-Sensor 1	n. c.	T-Sensor 2	Q3	cathode	Q4	heater 2

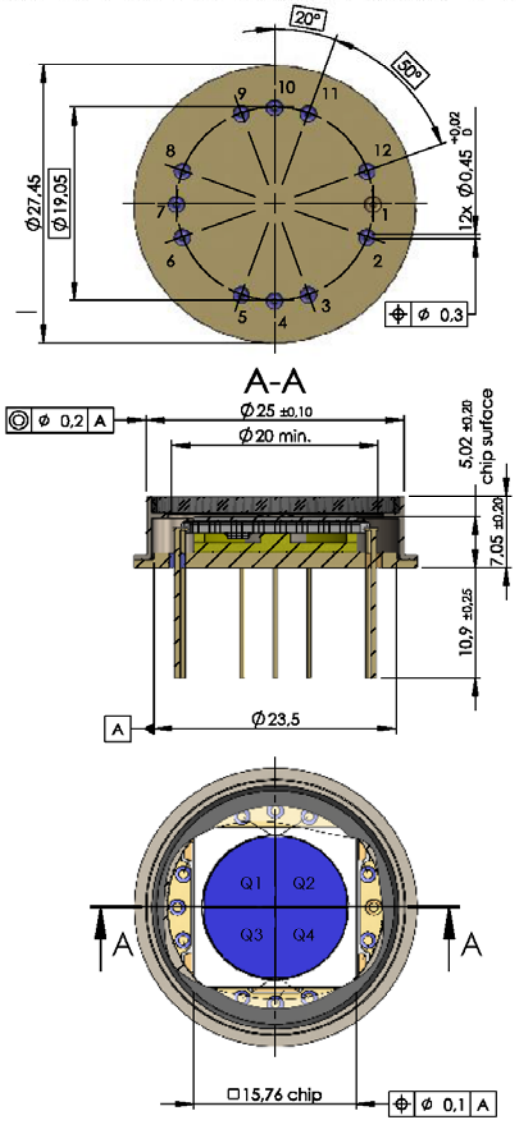

Disclaimer: Due to our strive for continuous improvement, specifications are subject to change within our PCN policy according to JESD46C.

European, International Sales:
First Sensor
First Sensor AG
Peter-Behrens-Strasse 15
12459 Berlin
Germany
T +49 30 6399 2399
F +49 30 639923-752
sales.opto@first-sensor.com

USA:
First Sensor
First Sensor Inc.
5700 Corsa Avenue #105
Westlake Village
CA 91362 USA
T +1 818 706 3400
F +1 818 889 7053
sales.us@first-sensor.com

ATTACHMENT E

PICO1024-048

Pico1024 Gen2™

1024 x 768 - 17 µm

High performance, high definition infrared imaging

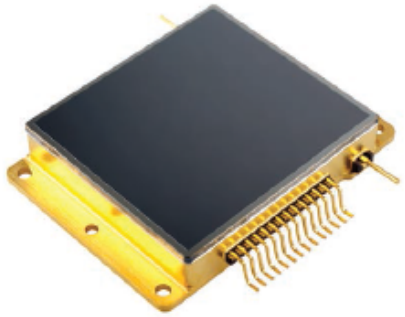

PERFORMANCE

- NETD < 50 mK (F/1, 300K, 30Hz)
- Frame rate up to 120Hz
- Typical array operability > 99.9%
- Low power consumption < 210 mW
- Extended operating temperature range: - 40°C to + 85°C
- Standards: MIL-STD-810 and -883
- Over exposure / Sun safe

- High resolution, high contrast imaging for long range detection
- Robust for extreme environments (e.g. TWS, RWS, situation awareness, UGS)
- Detects fast moving objects
- Reduced calibration time
- 24/7 surveillance capable
- Footprint compatible with UL05251-026

FEATURES

- Material: resistive amorphous silicon
- Spectral response: 8 - 14 µm
- Readout configuration driven by serial link
- Overall dimension (mm): 41.2 x 30 x 6.6 pin out excluded
- Weight < 30 g
- Easy TEC-less implementation

ULIS IN BRIEF

- A unique business model designed to serve OEMs
- High production capacity
- High-performance and cost-effective products
- Guaranteed product availability
- Customer partnership to assure success
- A dedicated customer support team

ULIS
Infrared for you

ZI Les Iles Cordées
BP 27 - 38113 Veurey-Voroize - France
Phone: +33 4 76 53 74 70 - Fax: +33 4 76 53 74 80
www.ulis-ir.com - ulis@ulis-ir.com

ELS-02-2015/01

Groupe SOFRADIR

Pictures: ULIS - Layout: Konago - Printing: In France - All right reserved
This document contains proprietary information of ULIS. This document is not to be copied in whole or part. Information furnished in this statement herein is believed to be accurate and reliable. However, ULIS assumes no responsibility for the consequences which may result from its use. Information mentioned in this statement are subject to change without notice.

ATTACHMENT F

北方广微

中文

Home | About us | Products | Application | News | Contact Us

GWIR 0302X1A

640X512

20μm

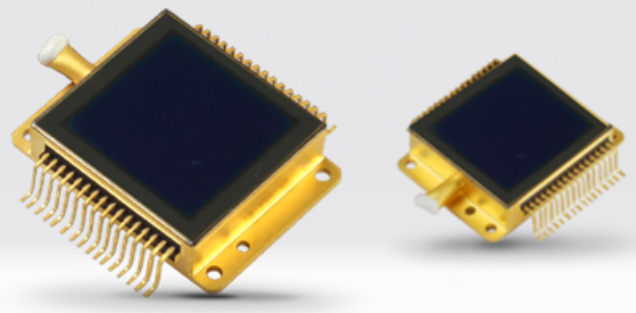

	Military	Standard
Material	VOx	VOx
Array format	640×512	640×512
Pixel-pitch	20μm	20μm
NETD(@1/f. 300K. 50Hz)	50mK	80mK
Area fill factor	70%	70%
Spectral response	8-14μm	8-14μm
Thermal time constant	15ms	15ms
Non-operating pixel	<0.1% (the central area of 160X128 without 4 consecutive bad spot)	<0.3%
Typical signal response	12mV/K	12mV/K
Frame rate (Max)	50Hz	50Hz
Dynamic range	≥70db	≥70db
Output signal	Two analog output	Two analog output
Power consumption (excluding TEC)	300mW	300mW
Operating temperature range	-40℃~+60℃	0℃~+60℃
Storage temperature range	-55℃~+70℃	-10℃~+70℃
Weight	25g	25g

Product specifications

North Guangwei Technology INC (GWIC)
North Real Estate Building, No. 81
ZiZhu Yuan Road
HaiDian District, Beijing

ATTACHMENT G

Description

The Uncooled Microbolometer infrared FPA detector researched and developed by Dali has already been applied in industrial production. has the advantages of high resolution, high sensitivity, low thermal noise and fast response. The detector are much suitable for thermography,security surveillance, vehicle night vision and various other applications.

Features

640×480 resolution (17μm)
Frame rate 25~50Hz
High uniformity, low thermal noise
hort integral time, high sensitive
Extended operating temperature range -40℃ to +60℃
Military standard qualification
Fully self-intellectual property

DALI

Zhejiang Dali Technology Co., Ltd. (DALI)
639 Binkang Road
Hangzhou, People's Republic of China

Thank you for considering my comments on the proposed changes to the U.S. Munitions List Category XII. Let me begin by noting I fully understand and appreciate that certain items of military significance need export controls to keep them from falling into the hand of our adversaries. Still, items widely available world-wide and treated elsewhere as dual-use should not be placed on the ITAR – yet that is what the proposed regulation does. ITAR export controls impose a significant burden on U.S. industry, stifle creativity, drive customers to our foreign competitors, and thus weaken industry in the U.S., thereby doing significant harm.

Following the request that comments on these proposed revisions be specific, below I discuss how the proposed revisions to the U.S. Munitions List Category XII capture a wide swath of InGaAs focal plane technology that is used for multiple commercial applications and that is available world-wide, including from the PRC, I list commercial applications, I describe the negative impacts this would cause to my business, and I offer some recommendations.

Technology Captured.

Paragraph (c)(2) captures infrared focal plane arrays that are NOT INTEGRATED INTO A PERMANENT ENCAPSULATED SENSOR with a peak response greater than 900 nm but less than 30,000 nm. Item (c)(4) captures those focal plane arrays described in (c)(2) that ARE IN A PERMANENT ENCAPSULATED SENSOR that have greater than 256 detector elements (pixels). InGaAs focal plane arrays typically have a response between 900 nm and 1,700 nm (this wavelength range is extended for some arrays, but they would still be captured by the spectral range defined in (c)(2)). Thus, taken together, (c)(2) and (c)(4) include ALL InGaAs focal plane array technology with more than 256 pixels.

There are a substantial number of foreign providers of InGaAs based sensors and cameras, many considered dual use I believe, and covered by (c)(4). Below is a list of foreign suppliers with their websites and InGaAs products captured by (c)(4) or (c)(2):

1. Xenics (Belgium) www.**xenics**.com/
    a. Xeva-2.35-320 (extended spectral range, 320x256 pixels)
    b. Bobcat-1.7-320 (320x256 pixels)
    c. Bobcat-320-Gated (320x256 pixels with integration times down to 80 ns)
    d. Bobcat-640-CL (640x512 pixels, CameraLink interface)
    e. Bobcat-640-GigE (640x512 pixels, GigE interface)
    f. Cheetah-640CL (640x512 pixels, framerates up to 1,730 Hz)
    g. Cheetah-640CL TE3 (Cooled version of the Cheetah)
    h. Cougar-640 (640x512 pixels, LN2 cooled for low noise)
    i. Meerkat-Fusion (1600x1200 VNIR, 320x256 InGaAs, 384x288 bolometer combination imager)

    j. Pumair-170DW (640x480 microbolometer and 640x512 InGaAs dual camera)
    k. Rufus-640-Analog (640x512 pixels)
    l. XFPA-1.7-640-LN2 (640x512 InGaAs bare detector)
    m. XS-1.7-320 (320x256 pixels)
    n. XSW-640 (640x512 pixels, OEM version)
    o. Xeva-1.7-320 (320x256 pixels)
    p. Xeva-1.7-320 TE3 (320x256 pixels, additional cooling)
    q. Xeva-1.7-320 VisNIR (320x256 pixels, extended spectral range)
    r. Xeva-1.7-640 (640x512 pixels)
    s. Xlin detector series (512x1; 1024x1; or 2048x1 linear arrays, speeds up to 40,000 Hz)
    t. Xlin-1.7-3000 (3x1024 linear array)
2. Andor (UK) http://www.andor.com
    a. iDus InGaAs 491 array series (1x512; 1x1024 linear arrays)
3. Photonic Science (UK) www.**photonic-science**.co.uk
    a. High Resolution InGaAs (640x512 pixels, extended spectral range)
    b. Cooled High Sensitivity InGaAs (320x356, extended spectral range)
4. Stemmer Imaging (UK) www.**stemmer-imaging**.co.uk
    a. AV Goldeye SWIR (320x256 pixels, at least 2 versions)
    b. AV Goldeye SWIR (636x508 pixels, at least 5 versions)
5. Raptor Photonics (N. Ireland) www.**raptorphotonics**.com
    a. Ninox 640 InGaAs (640x512 pixels)
    b. Owl (both 640x512 and 320x256 pixel versions)
6. Alcatel-Thales III-V Lab (France) http://www.3-5lab.fr/ (Foundry, InGaAs products not listed, but they are a known supplier of InGaAs focal plane arrays)
7. Nip (S. Korea) http://www.nip.co.kr
    a. PHK03M100CSV0 (640x512 pixels)
    b. PHK008M300CSV (320x256 pixels)
    c. THKIK32CSW (1024x1 pixels, linear array)
    d. THK2K10CSW (2048x1 pixels, linear array)
8. Artray (Japan) http://www.artray.us/
    a. 031TNR (640x512 pixels)
    b. 088TNIR (320x256 pixels)
    c. 0016TNIR (128x128 pixels)
9. Hamamatsu (Japan) www.**hamamatsu**.com
    a. G12242-0707W (128x128 pixels, bare)
    b. G11097-0707S (128x128 pixels, chip)
    c. G11097-0606S (64x64, bare)
    d. Other InGaAs offerings as well
10. Chungwa Leading Photonics Tech (Taiwan) http://www.leadinglight.com.tw/

    a. Foundry with 320x256 and 640x512 products.
11. Ghopto (China) http://www.ghopto.com/
    a. SWIR FPAs (bare focal plane arrays)
    b. GHSW320 (320x256 pixels)
    c. GH-SW640 (640x512 pixels)

The point of this long list is that InGaAs cameras covered by (c)(4) and (c)(2) are widely available on the international market. (In fact, a quick check just showed InGaAs cameras on eBay that would be captured by (c)(4).) These suppliers provide InGaAs focal plane arrays and/or cameras which far exceed the 256 pixel limit specified in (c)(4). The most typical arrays formats are: 320 by 256 (81,920) pixels and 640 by 512 (327,680) pixels. To the best of my knowledge, Hamamatsu is the only one of these companies that provides an InGaAs focal plane array with fewer than 256 pixels, indicating that (c)(4) covers nearly all of the InGaAs cameras available world-wide.

Commercial applications.

On Page 9 of the Dept. of State document RIN 1400-AD32, titled "Amendment to the International Traffic in Arms Regulations: Revision of U.S. Munitions List Category XII," the following statement can be found:

A note is added to paragraph (c) to address the incorporation of these defense articles into commercial items. With minor exceptions, all bare IRFPAs are controlled in Category XII, paragraph (c)(2). However, once an IRFPA has been incorporated into a permanent encapsulated sensor assembly, it ceases to be controlled in paragraph (c)(2) because it is incorporated into a higher order assembly. The permanent encapsulated sensor assembly will be controlled in paragraphs (c)(3) – (6), if it meets the control parameters of one of those paragraphs. These control parameters are set at a level that the Department has determined excludes most commercial products. Further, once most IRFPAs and permanent encapsulated sensor assemblies are incorporated into a camera core, monocular, or binocular or other higher order system, that system will not be subject to the ITAR or require authorization from the Department for export, unless it is specifically enumerated.

The highlighted statement suggests the control parameters capture very little commercial activity. In fact, (c)(4) captures a substantial portion of a commercial sorting industry (recycled plastics), as well as a portion of commercial food sorting, plus systems used for process control and in mining.

Regarding plastic sorting, a good reference can be found at:

http://plastics.americanchemistry.com/Assessment-of-Commercially-Available-Automated-Sorting-Technology

The companies that utilize InGaAs sensors for their plastic sorting instruments that would likely be covered by (c)(4) include:

1. Rofin Australia Paty Ldt. (Melbourne Australia)
2. MSS (Nashville, TN)
3. Pellenc (Pertuis, France)
4. Titech (now Tomra) (Asker, Norway)
5. Eagle Vizion (Quebec, Canada)
6. Visys (Australia)
7. Best (also Tomra now) (Asker, Norway)
8. NRT (Nashville, TN)
9. Eveready Manufacturing (Singapore)
10. BT-Wolfgang Binder GmbH (Gleisdorf, Austria)
11. RTT Steinert GmbH (Koln, Germany)

In total, there are 12 providers of commercial plastic sorting machines, 9 of which are foreign (8 if you recognize that Asker owns both Best and Titech). Exact deployment numbers are not known, but it is my understanding that TiTech (Norway) alone has sold more than 1,000 systems.

For food sorters (nuts and potatoes, and possibly more), commercial sorting systems that would fall under (c)(4) are provided by:

1. Key Technology Walla Walla, WA
2. EVK Di Kerschhaggl GmbH Raaba, (Austria)

InGaAs focal plane arrays that would be encompassed by (c)(4) are also used to monitor paper manufacturing and for mining (see short descriptions at: http://www.specim.fi/index.php/products/industrial)

My company markets to these industries and we know what the customers ask for. All our products with InGaAs focal plane arrays would be captured by (c)(4), and thus we would have a severe handicap competing in some of most lucrative markets for machine vision, Europe and Japan, as they are affluent economies with a high cost of labor. We have substantial direct competition in both Europe and Japan.

Note: Most of the commercial applications, such as sorting, require high-resolution, high-speed imaging. Consequently, using InGaAs cameras not be encompassed by (c)(4) (256 or fewer pixels (16 x 16 in a square format)) would result in a system with insufficient resolution to meet sorting requirements. In fact, there is substantial commercial pressure to utilize higher resolution and faster InGaAs cameras than are currently available.

Note: The commercial applications listed above happen to be the ones I am aware of, as they are ones where my company's products can be used. It is almost certainly not a complete list of the commercial applications for InGaAs technology captured by (c)(4).

Impacts on my business.

Having InGaAs cameras with more than 256 pixels on the USML would severely limit my company's ability to provide products to foreign existing markets, such as recycled plastic sorting and commercial food sorting, as well as closely related and promising similar commercial applications such as quality control (pharmaceuticals and cooked/processed foods) and precision agriculture.

The negative impacts of International Traffic in Arms Regulation (ITAR) controls on my business includes the higher cost of compliance, (i.e., learning how, or paying to, obtain an export license), the additional time delay needed to obtain the licenses, and the impact on my potential customers who must provide paperwork for licenses.

If the proposed rule is agreed to, then we would have a significant disadvantage in markets where we have foreign competition – this includes Europe, Japan (direct competitors), and to a lesser extent Australia and Canada (similar but differentiated product competitors), because the ITAR does not provide the license exceptions and flexibility that the EAR does. These regions encompass our best foreign opportunities. We will have similar problems in other countries where munitions items are prohibited while dual-use items are not.

In summary, the proposed changes to the United States Munitions List (USML) will add cost, introduce delays, but most importantly, burden our customers in ways our foreign competition will not. As a result, if this proposed rule is implemented, the U.S. government is effectively ceding the largest commercial opportunities with InGaAs cameras to foreign companies.

Lack of "Bright Line"

The proposed language does not create a "bright line" for items (16)(v) and (16)(viii). The text is included below for reference.

> (16) Infrared imaging systems or equipment (e.g., fully packaged cameras) incorporating or specially designed to incorporate an article controlled in this category, as follows, and specially designed electronics, optics, and displays therefor:
>
> (v) Multispectral imaging systems or equipment that either incorporate a multispectral IRFPA described in paragraph (c)(2) or (6) of this category, or classify or identify military or intelligence targets or characteristics;
> (viii) Incorporating mechanism(s) to reduce signature; or

In particular, the statement “classify or identify military or intelligence targets or characteristics” does not provide a bright line. Imaging systems, infrared or not, will record an image of the object you put in front of them. Thus, if one puts a tank or a terrorist in front of the imager, these objects will be imaged, and from that one could determine the tank’s shape and possibly identify the terrorist’s face, which I assume would be “military or intelligence targets or characteristics.”

Thus, this clause could effectively include pretty much any camera that records an image and outputs data to a computer. Thus the vague language of (16)(v) makes it essentially impossible to know whether or not a system would be encompassed by (16)(v).

Item (16)(viii) is also unclear to me because I do not know what the term “signature” means in this context.

Summary

The proposed language in the Dept. of State document RIN 1400-AD32, titled “Amendment to the International Traffic in Arms Regulations: Revision of U.S. Munitions List Category XII,” for Category 12 does not meet the stated objectives of Export Control Reform.

Rather than capturing the “crown jewels”, InGaAs cameras that would be covered by (c)(4) are widely available internationally (and are even offered on eBay), and thus controlling US exports would provide little containment of the technology. The proposed rule misrepresents or misunderstands the extent to which these cameras are used in commercial applications, and also the number of cameras that would be impacted by the rules. The impacts of including InGaAs on the U.S. Munitions List would impose significant burdens on U.S. companies for a variety of commercial applications, as well as effectively cede new opportunities with this technology to our foreign competitors. Additionally, at least some of the language fails to provide the “bright line” between ITAR and non-ITAR items.

Recommendation

I would recommend abandoning the USML proposed rule as well as the Commerce Companion rule in favor of the existing language in Category 12 for the following reasons:

1. The proposed language captures existing civilian SWIR cameras as well as future ones.
2. The proposed language does impact existing civilian commercial markets as well as future commercial markets.
3. Parts of the proposed language are ambiguous and could lead to commodity jurisdiction filings.
4. The proposed language does not meet the objectives of ECR which is higher fences around fewer items.

5. The proposed language does not provide military parameters, rather it relies on parameters like detector count and wavelength.
6. The 120+ page companion rule is too complex. It appears to remove important license exceptions and destinations as well as create new ECCNs that would require me to hire additional staff to review and keep up the language which would dissuade me from wanting to seek exports for my products.

I would suggest that if another attempt is made at revising the language, it should start with the existing language in Category 12, and then adapt language carefully so as to not capture widely available products, especially those with existing commercial applications.

Rand Swanson
President
Resonon, Inc.

RICOR USA INC.
Cryogenic & Vacuum Systems
200 Main St. 1st Flr, Salem, NH 03079 603-458-6346 www.ricor-usa.com

July 6, 2015

C. Edward Peartree
Director, Office of Defense Trade Control Policy
Directorate of Defense Trade Controls
U.S. Department of State
2401 E. St, NW, 12th Floor, SA-1
Washington, DC 25022

Regulatory Policy Division
Bureau of Industry and Security
U.S. Department of Commerce (Room 2099B)
14th Street and Pennsylvania Avenue, NW
Washington, DC 20230

Subject: Comments on Proposed Rule to Revise USML Category XII
80 *Fed. Reg*. 25,821 (May 5, 2015); RIN 01400-AD32

Email: PublicComments@state.gov (ITAR Amendment-Category XII)

Comments on Proposed Rule to Revise Individual Export Control Classification Numbers regarding Fire Control, Range Finder, Optical, and Guidance and Control Equipment that No Longer Warrant Control under the USML and to Transfer Items Subject to the EAR to the USML
80. *Fed. Reg*. 25798 (May 5, 2015); (RIN 0694-AF75)

Email: publiccomments@bis.doc.gov

Ricor USA Inc., a subsidiary of Ricor Cryogenic & Vacuum Systems Ltd. (collectively "Ricor"), appreciate the opportunity to provide comments on the proposed revision of USML Category XII published by the Department of State, Directorate of Defense Trade Controls ("DDTC") and by the Department of Commerce, Bureau of Industry and Security ("BIS") regarding revisions to multiple ECCNs applicable to the range of products identified in the title of the proposed rules. As reviewed in detail below, the adoption of these proposed rules would severely hamper the ability of U.S. manufacturers of infrared based devices to compete in the international marketplace for infrared focal plane arrays and cryocoolers and, at the same time, would impose regulatory barriers to foreign manufactures supplying these products to U.S. manufacturers for incorporation in commercial equipment for export markets.

Ricor is a world-leader in cooling-systems found in a wide range of military aerospace equipment and systems and commercial products and solutions, including in semiconductor manufacturing equipment and diagnostic tools, x-ray and gamma detectors, health and safety equipment and scientific instrumentation. Cryocoolers designed, developed and manufactured by Ricor enable the functionality of infrared sensor-based equipment in commercial devices for: spectrographic analysis, germanium detectors incorporated into cargo and other inspection equipment, gas detection, furnace inspections, infrared

microscopes, radioisotope identification, and for thermal conductivity testing and imaging. Our comments are directed toward the proposed revision of existing controls on cryocoolers.

In the sections that follow, we

(1) Present specific revisions to the proposed DDTC and BIS regulations,

(2) Document the largely unrestricted foreign availability of cryocoolers similar to those manufactured by Ricor, assess the negative impact of transferring jurisdiction over cryocoolers from the EAR to the ITAR and imposing ITAR controls on the export and reexport of cryocoolers, integrated IRFPA dewar cooler assemblies ("IDCAs") and commercial equipment that incorporates IDCAs with cryocoolers,

(3) Suggest that if export controls applicable to cryocoolers are to be redraft, the export agencies should minimize the unilateral trade limiting effects of ITAR controls on the U.S. commercial industry that incorporate IDCAs in their products and on other manufacturers in other countries that adopt controls similar to those maintained by the United States. The appropriate forum for establishing multilaterally-agreed to controls is among the members of the Wassenaar Arrangement.

I. Overview

As a company with a worldwide customer base, we are acutely aware of the defense, commercial and dual-use export controls that apply to our products by multiple export control regimes. Export control compliance has been integrated throughout Ricor's international operations. By competing in global markets we have become aware that certain other countries do not follow similar standards for reviewing proposed export transactions and approve the sale of cryocoolers to commercial customers that would not be authorized by the United States. In order to address this issue, the proposed regulations would establish a set of criteria that would largely render uncompetitive in global markets U.S.-origin equipment that incorporate IDCAs with cryocoolers. By restricting severely U.S. exports of commercial products, the U.S. share of the global market will continue to decrease, thus restricting the long term competitiveness of the U.S. industry to design and manufacture IDCAs for commercial and military products.

II. Suggested Modifications to the Proposed Regulations

With respect to the ongoing Export Control Reform ("ECR") initiative, we believe that our familiarity with the global marketplace for cryocoolers and the proposed revisions to the USML and CCL, enable us to propose the following modifications to the proposed regulations.

A. Expand the Scope of Note 2 to Proposed USML Paragraph (c) to include "Integrated IRFPA dewar cooler assemblies (IDCAs)" with cryocoolers (with stated performance characteristics) and "active cold fingers"

As proposed, Note 2 to Category XII(c) identifies certain Defense Articles that would become eligible for export under the EAR when integrated with end-items subject to the EAR. However, as standalone articles they would remain subject to the ITAR.

> The articles described in paragraphs (c)(1) through (5), (c)(7), (c)(8), and (c)(12) other than (c)(12)(ix) having greater than 640 detector elements in any dimension, and (c)(12)(x) are subject to the EAR when, prior to export, reexport, retransfer, or temporary import, they are integrated into and included as an integral part of an item subject to the EAR, and cannot be removed without destruction or damage to the article or render the item inoperable.

While this 'Note" includes, as part of the exception from the See Through rule (*e.g.*, certain image intensifier tubes, photon detectors, various types of focal plane arrays, infrared focal plane arrays and certain infrared imaging camera cores) IDCAs with cryocoolers as described in paragraph (c)(9) are excluded from the Note. The text of paragraph (c)(9) follows:

> (c)(9) Integrated IRFPA dewar cooler assemblies (IDCAs), with or without an IRFPA, having any of the following:
>
> (i) Cryocoolers having a cooling source temperature below 218 K and a mean-time-to-failure (MTTF) in excess of 3000 hours;
>
> (ii) Active cold fingers;
>
> (iii) Variable or dual aperture mechanisms; or
>
> (iv) Dewars specially designed for articles controlled in paragraphs (a), (b), or (c) of this category

<u>Proposed revision:</u> Note 2 to Category XII(c) should be expanded to include the articles in paragraph (c)(9) as follows:

> The articles described in paragraphs (c)(1) through (5), (c)(7), (c)(8), ~~and~~ **(c)(9) and** (c)(12) other than (c)(12)(ix) having greater than 640 detector elements in any dimension, and (c)(12)(x) are subject to the EAR […] item inoperable.

<u>Justification</u>:

- We are not aware of publicly available information confirming that unauthorized diversions of cryocoolers have occurred resulting from their extraction from commercial/dual-use equipment. If there is such information and it is not within the public domain, then the appropriate U.S. Government agencies should initiate discussions with the U.S. domestic industry and Wassenaar member states to address this issue.

- The net effect of the exclusion of paragraph (c)(9) from Note 2 is to impose ITAR export and reexport controls on all commercial equipment that incorporate a cooled IDCA. Although there are limited exceptions (approximately one percent of sales), for all intent and purpose, as ITAR-controlled end-items U.S.-origin cooled commercial equipment that incorporate IDCAs with the temperature ranges provided by cryocoolers identified in paragraph (c)(9) could not compete in the commercial marketplace with equipment from non-U.S. sources.

  In addition to ITAR-based limitations on reexports, based on the proposed standard in Note 2, it would not be possible for the IDCA OEM, or for the manufacturer of the cooler, to repair and replace elements within the IDCA. Generally, under the proposed ITAR standard, attempts to repair an IDCA would render the cooler inoperable.

B. The Mean-time-to-failure ("MTTF") for controlled cryocoolers should be increased to 10,000 hours.

Ricor has prepared a table identifying the performance characteristics of its principal coolers that is available on the Company's website and that also posts datasheets for its cryocoolers.

Proposed Revision: Based on the MTTF for its cryocoolers, and a review of the data sheets and brochures available from other manufacturers, we believe that the MTTF should be increased to 10,000 hours. As such, paragraph (c)(9) would appear as follows:

> (c)(9) Integrated IRFPA dewar cooler assemblies (IDCAs), with or without an IRFPA, having any of the following:
>
> (i) Cryocoolers having a cooling source temperature below 218 K and a mean-time-to-failure (MTTF) in excess of ~~3000~~ **10,000** hours; [. . .] of this category.

In addition, ECCN 6A002.d should be revised reflect the exclusion of certain cryocoolers from ITAR control.

Justification:

- The proposed paragraph (c)(9) with an MTTF in excess of 3,000 hour is a standard so low and encompassing that it would apply to virtually all cryocoolers sold for commercial or dual-use applications. Based on our understanding of the requirements of commercial and military customers, we believe that an increase of the MTTF to 10,000 hours should permit such cryocoolers with an MTTF under 10,000 hours to be exportable under the EAR.

- In our experience, military end-users require a higher MTTF than commercial customers and are willing to invest in cryocoolers with a higher cost margin (*i.e.*, ranging from 25 to 40 percent) in order to achieve a MTTF (*e.g.*, 15,000 to 30,000 hours and possibly even greater). Because of the significantly higher cost of military equipment over commercial products incorporating IDCAs with cryocoolers, there is value and enhanced reliability for military systems to incorporate components with an MTTF exceeding 10,000 hours.

- Adoption of the proposed MTTF revised standard would support the export of dual-use cryocoolers in commercial equipment. Accordingly, exports of cryocoolers below an MTTF of 10,000 hours would classified in ECCN 6A002. This ECCN is subject to National Security Column 2 ("NS/2") controls. In parallel, technology for the development of equipment, materials or software in ECCN 6A002 is subject to NS/1 controls. Further, ECCN 6E002 applies NS/1 and UN controls to technology for the production of equipment controlled by 6A002.

- If it is deemed necessary to strengthen EAR controls on exports of cryocoolers, one alternative would be to require licensing to all countries, except Canada (*i.e.*, NS/1 controls). Other adjustments to the controls on cryocoolers could be applied regarding sales to a "military end-user" or for incorporation into a "military commodity." These and other options should be part of the public review process inherent in the Export Control Reform initiative.

- While Ricor continues to believe that the EAR currently provides sufficient controls regarding the export of cryocooler technology, comparable levels of control under the ITAR are set forth in **Note 1 to paragraph (f)** regarding Technical Data and Defense Services related to "integrated IRFPA IDCAs controlled in paragraph (c)(9). Further **Note 2 to paragraph (f)** applies specific controls on Software and Technical Data related to design or manufacturing process descriptions. Finally, **Note 2 to Paragraph A of Note 2 to paragraph (f)** clarifies the extent to which technical information can accompany an approved commercial export.

    - Technical data does not include information directly related to basic operating instructions, testing results, incorporating or integrating IRFPAs into higher level packaged assemblies not enumerated in this category, or external interface control documentation associated with such assemblies or assemblies subject to the EAR, *provided such information does not include design methodology, engineering analysis, or manufacturing know-how for a USML controlled IRFPA.* (Emphasis added.)

    - Ricor regards the "design methodology," "engineering analysis" and "manufacturing know-how" (as these terms are defined within the ITAR) as highly propriety and the principal content of its intellectual

property. Moreover, company proprietary manufacturing techniques, developed over years of trial and error, are not easily transferred and Ricor has no interest in releasing such manufacturing know-how. In designing, developing and manufacturing cryocoolers, we believe that it is virtually impossible to reverse engineer modern cryocoolers. Therefore, we respectfully suggest, that domestic and multilateral export controls focus on determining the most efficient and effective manner to regulate the export of cryocooler technology as opposed to anti-tampering measures to prevent the unauthorized diversion of cryocoolers.

- The proposed regulation issued by BIS on 5 May 2015 does not revise the current version of ECCN 6A002.d. While the proposed ITAR controls take precedence over the EAR, ECCN 6A002.d would continue to control a limited number of cryocoolers based on preexisting, and perhaps prospective Commodity Jurisdiction ("CJ") determinations. However, ECCN 6A002 and revised USML XII would likely give rise to overlapping jurisdictions, confusing exporters and eroding the "bright line" between the EAR and ITAR that was a principal objective of Export Control Reform.

- Therefore, ECCN 6A002.d.2 should be revised as follows to control cryocoolers that are not subject to ITAR controls. as follows:

  6A002 Optical sensors and equipment, and "components" therefor, as follows).

  d. Special support "components" for optical sensors, as follows:

  d.1. "Space-qualified" cryocoolers;

  d.2. Non-"space-qualified" cryocoolers having a cooling source temperature below 218K (-55° C), as follows:

  d.2.a. Closed cycle type with a specified Mean-Time-To-Failure (MTTF) ~~or Mean-Time-Between-Failures (MTBF), exceeding 2,500~~ **under 10,000** hours; [. . .]

The proposed regulation issued by BIS on 5 May 2015 does not revise the current version of ECCN 6A002.d. While the proposed ITAR controls take precedence over the EAR, ECCN 6A002.d would continue to control a limited number of cryocoolers based on preexisting, and perhaps prospective, Commodity Jurisdiction ("CJ") determinations.

C. The proposed regulation should remove "active cold fingers from Paragraph (c)(9).

We do not understand the term "active cold fingers" as it appear in proposed USML XII(c)(9)(ii). While we understand fully the design, development, manufacture and utility of

"cold fingers," the term "active" is not utilized among cryocooler manufacturers. Further, we could not identify this term in published scientific or technical articles.

As a term without definition, the current reference to "active cold fingers" could be interpreted to include all cold fingers, when in fact cold fingers are mechanical and passive parts designed for each cryocooler model to "minimize the thermal conductivity between the cooled mass and the outside world" and are usually constructed of stainless steel, inconel and titanium.[1]

Therefore, we recommend deletion of this term for the following reasons.

- Cold fingers are generally made in a facility with machining capabilities. While they are designed to function with cryocoolers, they are not necessarily sourced from the cryocooler manufacturer. Moreover, as a machined part, their design does not incorporate any special manufacturing. Therefore, we do not understand why ITAR controls would be applied to cold fingers.

- If the term "active cold fingers" is intended to describe a a narrow and specific type of cold finger that warrants control in paragraph (c)(9), its definition should be incorporated directly into paragraphs (c)(9)(ii) and (e)(7).

- If a special type of "active" cold finger is subject to controls in (c)(9) and (e)(7), a new Note should clarify that the controls in these paragraphs do *not* apply to "mechanical" or "passive" cold fingers of the type that are integrated with the class of cryocoolers that were within the scope of ECCN 6A002.d.2. It's a mechanical part sometimes sold separately and other times it is purchased by the cryocooler for from various sources and it's a part a mechanical part made by any machine company not high tech item

D. The language in Note 2 to Category XII(c) regarding removal "without destruction or damage to the article or render the item inoperable" should be revised and clarified to permit the IDCA OEM and the cryocooler OEM to repair and maintain the "Integrated dewar cooler assemblies (IDCAs)" with cryocoolers."

Proposed Revision:

The articles described in paragraphs (c)(1) through (5), (c)(7), (c)(8), ~~and~~ **(c)(9) and** (c)(12) other than (c)(12)(ix) having greater than 640 detector elements in any dimension, and (c)(12)(x) are subject to the EAR when, prior to export, reexport, retransfer, or temporary import, they are integrated into and included as an integral part of an item subject to the EAR, and **satisfy an anti-tamper standard such that, except for the**

[1] "What is an Integrated Detector Assembly?" Aron Traylor. College of Optical Sciences, The University of Arizona. (November 29, 2010).

Original Equipment Manufacturers (OEMs) of the components referenced in this paragraph, the articles cannot be removed **by other parties** without destruction or damage to the article**; thus rendering the items subject to the EAR** ~~or render the item~~ inoperable **(*i.e.*, cannot function until a repaired or replacement unit is reinstalled)**.

- In addition, the revised **Note** should clarify that the anti-tamper requirement regarding "destruction or damage" will be implemented at a date to be determined following consultations with the U.S. suppliers and the governments of foreign suppliers in Wassenaar member states of the articles identified in Note 2 to Paragraph (c).

- In the absence of dispositive guidance as to what constitutes the inability to remove a cryocooler "without destruction or damage to the article," the current language imposes a standard that creates substantial risk for exporters. What may be regarded as satisfying this standard by an OEM, may not be acceptable to DDTC or DoD. Therefore, exporters would likely seek advisory opinions requiring detailed technical analysis and testing by U.S. Government laboratories. The proposed standard lacks substance and could result in considerable delays in obtaining export licenses from DDTC.

Justification:

- With the addition of (c)(9), Note 2 would permit an end-item[2] with an IDCA and controlled cryocooler to be regarded for the purposes of export and reexport as subject to the EAR notwithstanding the incorporation of ITAR-controlled Defense Article(s). We acknowledge that this is an exception to the ITAR "See-Through" rule under which the incorporation of ITAR-controlled Defense Articles into a commercial item would subject the commercial item to ITAR-controls. However, for the following reasons this "exception" or "carve out" appears to have limited utility for U.S. exporters.

- Under the proposed Note 2, with respect to commercial equipment that incorporates an IDCA with a controlled cryocooler, if the commercial equipment were not functioning according to its performance specifications, the IDCA could not be repaired; *e.g.*, the cryocooler could be serviced or replaced. In other words, replacing the IDCA and cryocooler as one unit would be the only, and uneconomic, alternative.

    - Relative to the cost of commercial equipment, such as for gas detection, furnace inspections and conductivity testing, the cost of replacing the IDCA in commercial equipment is significant relative to the cost of replacing the cryocooler. In general, the cost of the

[2] ITAR § 120.45(a) defines an "end-item" as "a system, equipment, or an assembled article ready for its intended use. Only ammunition or fuel or other energy source is required to place it in an operating state."

cryocooler is roughly approximately 20 percent of the cost of the IDCA.

- If foreign-made equipment incorporating IDCAs of the type identified in (c)(9) cannot be serviced and repaired by OEMs, why would customers outside the United States purchase U.S.-origin equipment when its long-term operating cost beyond warranty protection would be significantly higher than a foreign-made alternative?

- The proposed revision would permit the IDCA OEM and the cryocooler OEM to repair and maintain the "Integrated IRFPA dewar cooler assemblies (IDCAs)" with cryocoolers" and "active cold fingers."
- As an additional complication, under the proposed rule, if a defective U.S.-origin IDCA were to be returned for repair from abroad, it would be imported temporarily into the United States as an ITAR article. Accordingly, it would be eligible for the Temporary Import License Exemption at ITAR § 123.4(a)(1) for servicing "*e.g.*, inspection, testing, calibration or repair, including overhaul, reconditioning and one-to-one replacement of any defective items, parts or components. . . " Only U.S. persons, or foreign persons authorized under an ITAR foreign person employment license, could access the IDCA.

- Ricor is developing a "one-time cooler" for certain commercial applications, *e.g.*, for use in the detection of toxic or flammable gases. The intent of this design is such that removal of the cooler would prevent it from being serviced, repaired or reintegrated with another detector. A party not authorized to procure or acquire commercial equipment with a component identified in paragraph (e)(7), would *not* be able to extract and repurpose the cooler. In addition, there would be a high risk of damage or destruction to the IDCA. Ricor is prepared to review its "one-time cooler" with representative of agencies that administer export controls.

E. The scope of proposed USML XII(e)(7) and the Note to paragraph (e) require clarification.

Paragraph (e)(7) repeats the text of cryocoolers and active cold fingers that appear in paragraph (c)(9). While the later paragraph imposes ITAR controls on IDCAs that incorporate cryocoolers, the Note to paragraph (e) states clearly that the listed parts and components are subject to the EAR when they are "integrated into and included as an integral part of an item subject to the EAR, and cannot be removed without destruction or damage to the article. . . "

As we understand this Note, while the items in paragraph (e)(7)(i) and (ii) are subject to ITAR controls as individual items, they could theoretically be incorporated directly into subcomponents, subsystems or end-items subject to the EAR. However, if incorporated into an IDCA, they would, in effect, be subject to the ITAR since the IDCA is ITAR-controlled by virtue of paragraph (c)(9). While this may provide some limited opportunity for the

export of the cryocoolers and cold fingers listed in paragraph (e)(7), it is our experience that virtually all cryocoolers are incorporated in IDCAs. If this interpretation is correct, then the Note would have a small effect on releasing a very small number of cryocoolers from ITAR licensing controls.

While we have proposed specific revisions to paragraph (c)(9) and (e)(7) and their related Notes, we believe that cryocoolers should continue to be classified within ECCN 6A002. Alternatively, cryocoolers (and their parts) should be divided between the EAR and the ITAR as suggested above based on their MTTF.

III. General Comments on the Proposed Transfer of Export Jurisdiction of Cryocoolers from the EAR to the ITAR

A. The proposed rules will adversely affect U.S. industry competitiveness, including manufacturers of cryocoolers and "active cold fingers."

With the context of Export Control Reform, neither DDTC nor BIS have published documentation to demonstrate that there has been an ongoing diversion of cryocoolers or active cold fingers to countries with policies inimical to the national security or foreign policy interests of the United States. With all due respect, the change in jurisdiction for cryocoolers from EAR to ITAR controls, and the accompanying controls on Technical Data and Defense Services, constitute a U.S. unilateral control that will accelerate the decline in the competitiveness of the U.S. industry. This decline has been documented in reports issued by BIS[3], private sector industry studies[4] and the U.S. trade press. The proposed change in export licensing jurisdiction to the ITAR involving cryocoolers and a certain type of cold finger, will likely reduce further the global competitiveness of the U.S. industry. A study published in 2013 by The Eisenhower School,[5] ("the Eisenhower Study" or "Study") in our view, correctly describes the state of the U.S. industry and the as yet unrealized benefits of Export Control Reform. Based in part on the BIS study published in October 2012, the Eisenhower Study states: "Currently the US is the largest exporter of thermal imaging devices; however, US global market share has been on a steady decline since 2002."

The following excerpts provide an optimistic projection that the Export Control Reform Initiative ("ECRI") would simplify controls, enhance the competitiveness of the U.S. industry, and thereby facilitate future technical and cost benefits for the U.S. military. According to the Study, export controls under the ITAR and EAR

---

[3] "Defense Industrial Base Assessment of the U.S. Imaging and Sensor Industry." U.S. Department of Commerce, Bureau of Industry and Security. Office of Strategic Industries and Economic Security. (October 2006).

"Critical Technology Assessment – Night Vision Focal Plane Arrays, Sensors and Cameras." U.S. Department of Commerce, Bureau of Industry and Security. Office of Technology Evaluation (October 2012).

[4] Maxtech International, Inc. "The World Market for Commercial and Dual-Use Infrared Imaging and Infrared Thermometry Equipment. (Vol. IRW-C, 2014 Edition.)

[5] "Spring 2013 Industry Study. Final Report – Weapons Industry." The Dwight D. Eisenhower School for National Security and Resource Strategy. National Defense University. Fort McNair, Washington, DC. (*See* pages 8-10, footnotes deleted.)

> have made it more difficult for US firms to remain competitive in the global market, because foreign companies are free to offer competitive products while US firms are restricted. Worldwide there are over 100 non-US competitors in 23 countries that compete with US firms [. . .].
>
> At the present time, thermal imaging devices and systems are adversely affected by several export controls. US firms are hopeful that changes from the Export Control Reform Initiative (ECRI), will help increase their market share overseas, which could replace some of the lost income due to reduced US sales. So far there does not appear to be any significant changes in this area, all while US firms are steadily losing export business, down to 8% market share in 2010 from more than an 18% share in 2002.

With respect to the future of ECRI, the Study recommended supporting ECRI

> and other initiatives to *simplify the export rules and increase US competitiveness*. Many lower resolution thermal imaging technologies are common across the globe, and these compete with US firms. *Export controls should be reduced or even eliminated for those technologies that are prevalent across the global market, allowing US firms to compete openly in the market and increase overall sales, which will assist in reducing overall unit costs across all product lines*. (Emphasis added.)

In contrast to the expectation regarding ECRI in the Study, the application of ITAR controls to formerly commercial products would create substantial disincentives for companies abroad to procure ITAR-controlled cryocoolers. The extent to which these controls are a disincentive to purchasing U.S.-origin, ITAR-controlled cryocoolers and their parts are summarized below.

- Permanent DSP-5 export licenses would be required for the sale of individual cryocoolers and, as such, would not be eligible for an EAR-based *de minimis* calculation. The requirement that they would be destroyed or damaged if removed from an IDCA will increase prices and the lifetime operational costs of individual products. If a foreign customer purchased U.S.-origin cryocoolers, the foreign commercial equipment would become subject to ITAR reexport controls (*i.e.*, DDTC would need to approve in advance each end-user). Moreover, it appears most unlikely that DDTC would approve Distribution Agreements for cryocoolers.

- The temporary import and temporary export of cryocoolers would be subject to DSP-61 and DSP-73 license controls. U.S.-origin commercial end-items could be entered for repair under an exemption, but the anti-tamper

requirements as proposed would forestall the servicing and repair of the cryocoolers.

- Technical cooperation between a U.S. and a foreign company involving cryocooler Technical Data would require a DSP-5 or a Technical Assistance Agreement. In either event the foreign company should assume that its use of ITAR-controlled Technical Data would render its cryocoolers subject to ITAR jurisdiction and related licensing controls. If a foreign company imported a U.S.-origin cryocooler for a commercial application, and its employees were not covered by a security clearance issued by their national government, the company would need to screen its employees for substantive contacts with U.S. embargoed countries and have its employees sign ITAR-based Non-Disclosure Agreements.

- Finally, ITAR § 129.4(a)(2)(vi) would require that "brokers" selling ITAR-controlled cryocoolers obtain advance approval from DDTC in the form of a brokering license.

Individually or in combination, such ITAR controls applied unilaterally by the United States would likely contribute further to the U.S. share of global market for cryocoolers, thus shifting cryocooler R&D and related applications offshore.

B. The proposed revision of USML XII is a unilateral control that circumvents the Wassenaar process for establishing controls on dual-use and military products.

There is an alternative to unilateral controls on cryocoolers. While there is established foreign availability for cryocoolers, with the exception of the People's Republic of China, the other non-U.S. cryocooler manufacturers known to Ricor are located in Wassenaar member states: Canada, France, Germany, Japan, Slovenia, South Korea and Israel (although not a member of the WA , Israel has implemented the WA dual-use list in its domestic export control regulations). Therefore, Ricor respectfully suggests that before the imposition of U.S. unilateral controls, the United States should seek to establish within Wassenaar a common export rule regarding IDCAs with cryocoolers. .

The applicable text in the Wassenaar Arrangement for dual-use controls that follows is the basis for ECCN 6A002.d

> 6. A. 2. d. Special support components for optical sensors, as follows:
>
> 1. "Space-qualified" cryocoolers;
>
> 2. Non-"space-qualified" cryocoolers having a cooling source temperature below 218 K (-55°C), as follows:
>
> a. Closed cycle type with a specified Mean-Time-To-Failure (MTTF) or Mean-Time-Between-Failures (MTBF), exceeding 2,500 hours;

Under WA-Munitions List ("ML"), Note 1 in ML15 applies controls to "Cooling systems for imaging systems" provided they are "specially designed for military use." The clear implication is that cooling systems designed for other than a military application were not intended to be controlled as munitions items. The adoption of "specially designed" as a control and decontrol criteria is absent from paragraph (c)(9). The incorporation of the term "specially designed" in (c)(9) would provide the basis for applying a high level of licensing controls and interagency review to proposed exports of cryocoolers sold exclusively for military applications. With the demise of the Militarily Critical Technologies List ("MCTL"), there is no objective standard to determine whether the export of individual products, based on a U.S. technological advantage, should be strictly controlled. These circumstances underscore the utility of reviewing controls on cryocoolers within Wassenaar.

C. There is significant foreign availability of cryocoolers and their related parts and components (*e.g.*, cold fingers). Accordingly, foreign availability should be a major factor in determining export jurisdiction for cryocoolers.

Accordingly, those interested in purchasing cryocoolers and avoiding robust U.S. defense export controls may simply source their desired cryocooler from a variety of foreign vendors. By way of examples, such cryocoolers can be purchased from Thales Cryogenics in France, from Le-tehnika in Slovenia and, as noted above, from companies in other Wassenaar member states and the PRC. Attached to this submission are examples of cryocoolers available from non-U.S. sources as dual-use items. This attachment does not include specification and data sheets from all known manufacturers. Such an effort would constitute a full-blown foreign availability study. However, upon request Ricor is willing to provide additional information regarding foreign availability. We know that laboratories, factories and other facilities interested in ongoing monitoring of potentially hazardous gases often install sensor-based monitoring systems that contain embedded cryocoolers.

- One such examples is the Airgard® product offered for sale by MKS Instruments, Inc., a NASDAQ traded U.S. company, that offers process control solutions for manufacturing industries.

- Other examples of such products include Flir's GF306, Microptik BV's SF6 Finder MTG 80 (produced by a company in the Netherlands), and amperis's SF6 Detection TC706 product (produced by a company in Spain), each of which functions to detect sulfur hexafluoride and other harmful gases and for detecting gas leaks.

- An additional non-defense or aerospace system in which cryocoolers are embedded includes conductivity testing equipment, such as the thermal conductivity tool, "C-Therm Tci", offered by C-Therm Technologies.

- Other civilian systems include heat-sourcing sensing systems such as the TE Cooled SCD-13 Detectors offered by CalSensors and germanium-sensing equipment such as ORTEC's Micro-Detective-HX and similar products offered by Areva group's Canbera company**.**

Brochures for these companies and their cooled products, as well as for other companies (*e.g.*, K.I.P. in the PRC) are attached to this submission.

The U.S. regulations applicable to cryocoolers should be part of a level playing field that includes other companies in other Wassenaar countries and countries that follow WA controls. If DDTC and BIS decide to impose country-specific controls on the export of cryocoolers and their related technology, there are precedents for such a decision that would not disadvantage the entire U.S. industry.

Based on publicly available data, and our own corporate experience, cryocoolers are becoming increasingly prevalent in civilian/commercial products. Aside from the potential negative impact on the availability of advanced U.S.-origin products for military applications, the proposed ITAR rules do not take into account foreign availability and risk disproportionately hindering the development of commercial equipment that utilize IDCAs and thereby cryocoolers.

* * *

In order to facilitate the regulatory review process, Ricor would welcome the opportunity to prove additional information regarding its understanding of the international market for cryocoolers or to discuss related technical issues.

Respectfully submitted,

Frank Perry
Chief Executive Officer
Ricor USA Inc.

Shlomo Baruch
Vice President Quality Assurance, Compliance & Regulations
Ricor Cryogenic & Vacuum Systems Ltd.

Attachments

Attachment 1: Product Brochures for Cooled Products

Infrared camera for SF6 Gas Detection TC706

The TC706 visualizes and pinpoints gas leaks of SF_6, without the need to de-energize high-voltage equipment or shut down the operation. The portable camera also greatly improves operator safety, by detecting emissions at a safe distance, and helps to protect the environment by tracing leaks of environmentally harmful gase.

SF_6 is used in the electric power industry as an insulator and quenching medium for gas-insulates substatios and circuit breakers.

TC706 – Great choice for Gas Leaks Detection

Could detect following gases:

- SF_6
- Chlorine dioxide
- Ethylene
- Ammonia
- Acetic acid
- MEK
- Cyanoacrylate
- FREON-12

TC706 Unique Feature:

- Adapt passive thermal imaging technology, could accurately find the leakage point at long distance without power supply shutdown
- Using Cooled QWIP detector, enjoy superior image quality and accurate temperature measurement
- Voice and video recording function
- HD OLED view finder, combined with 5” touch rotating screen, suitable for many on-site using
- No specific background and auxiliary light needed, suitable for many on-site checking
- Small size, light weight and easy operation, suitable for single person on-site using

Technical parameters

Specifications		TC706
Detector characteristics	Detector type	Cooled QWIP
	Array size/format	320×256
	Field of view/min focus distance	14,5°×10,8°/0,5m or 24°x18°/0,3m
	Spatial resolutions(IFOV)	0,79mrad or 1,13mrad
	NETD	[illegible]

Image manage	NETD		≤0,025℃@30℃
	Frame rate		60Hz
	Focus		Auto / Manual / Motorize
	Zoom		1-4x electronic zoom
	Spectral range		9,8 – 11,2μm – peak 10,55μm
	CCD		1,3 million CMOS
Image display	View finder		HD 0,6” color OLED, with zoom
	LCD		HD 5” color digital touch screen, 800x600
Measurement	Temperature ranges		-40℃～+500℃
	Accuracy		±2℃ or ±2% of reading, whichever is greater
	Measurement correction		Auto/Manual
	Mode		Up to 10 movable spots. Up to 5 movable areas (maximum, minimum and average temperatures). Up to 2 movable lines. Line profile. Isotherm. Temperature difference. Alarm (voice, color)
	Image control	Color pallete	11 pallettes changeable (Iron, Rainbow, Grey and Grey inverted, etc)
		Image adjustment	Auto/Manual adjustment of contrast and brightness
	Setup		Date/time, temperature unit °C/°K/F, language
	Emissivity correction		Variable from 0.01 to 1.0
	Background temp adjustment		Auto, according to the background temp
	Atmospheric transmission correction		Automatic correction according to user input object distance, humidity and temperature
Image Save	Storage Card		8G SD card, storage > 6000
	Storage Mode		Manual/automatic single-frame image storage, continuous visible, infrared video recording
	IR image	Single frame	JPEG, 14 bit thermal image with measurement data
		Video	MPEG-4 or 14 bit thermal image with measurement data
	Visual image	Single frame	JPEG
		Video	MPEG-4
	Voice annotation		40s., saved together with the image
	Image improvement		Averaging (S2, S4, S8, S16), spatial filter
Laser pointer	Power supply		Second level, 1mW/635nm(red)

Laser pointer	Power supply	Second level, 1mW, 635nm(red)
Power supply	Battery type	Li-Ion, rechargeable
	Battery operating time	3 hours continuous operation
	Charging system	Intelligent charger or power supply adaptor online charge
Power system	Power saving	Yes
	External power	10 – 15 V DC
Environment	Working temp	-15 ℃ - +50 ℃
	Humidity	≤ 90% non-condensing
	Encapsulation	IP54
Physical characteristics	Weight	3 Kg
	Dimension	335x160x172mm
Interface	External DC Input	Yes
	Audio output	Yes
	Video output	HDMI
	USB 2.0	Image, measurement data and voice transfer to PC

Download software

Using Infrared camera for SF6 Gas Detection TC706

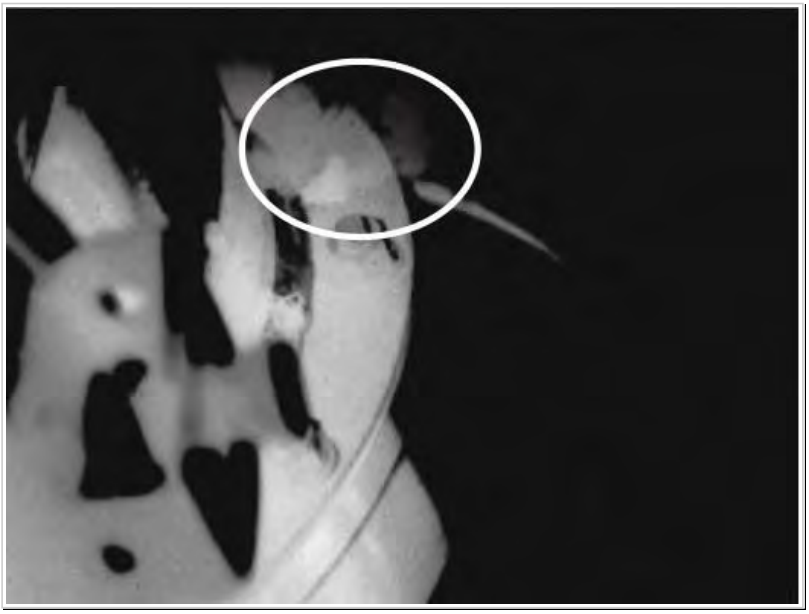

Leak detection Infrared camera for SF6 Gas Detection TC706

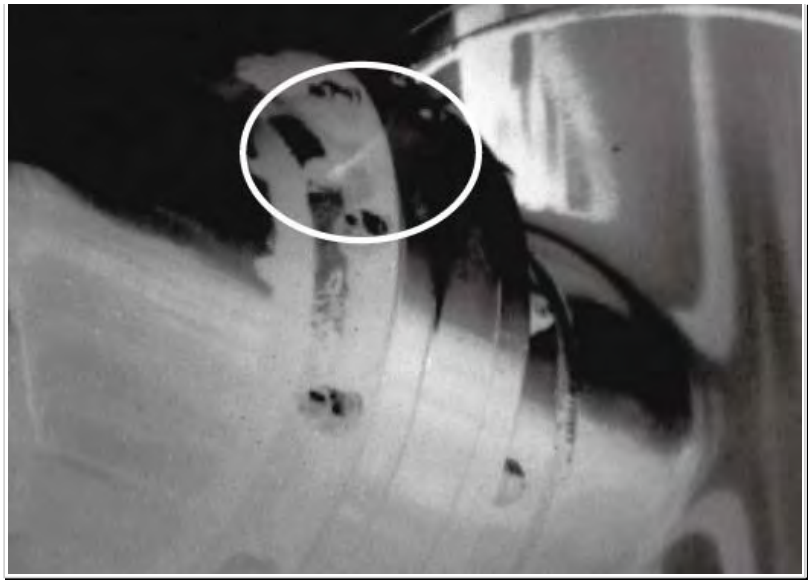

Example image leak detection Infrared camera for SF6 Gas Detection TC706

Hand shank and view finder could rotate simultaneously

Hand shank and view finder could rotate simultaneously, easy for observation

Infrared camera for SF6 Gas Detection TC706

Do you want to buy high quality Professional thermographic infrared cameras?

Inquire for our **Professional thermographic infrared cameras prices.**

Do not hesitate to **contact us**, call us today by phone **(+34) 982 20 99 20.**

We are happy to help you.

TC706

HIGHEST RESOLUTION AND ACCURACY
WITH LOW COST

SF_6 Gas Detection

TC706

Could detect following gases:

* SF_6
* Ammonia
* Cyanoacrylate
* Chlorine dioxide
* Acetic acid
* FREON-12
* Ethylene
* MEK

amperis

www.amperis.com

AMPERIS PRODUCTS S.L
Agricultura,34
27003, Lugo, Spain

Contact

+T [+34] 982 20 99 20 | F [+34] 982 20 99 11
info@amperis.com | www.amperis.com

The TC706 visualizes and pinpoints gas leaks of SF_6, without the need to de-energize high-voltage equipment or shut down the operation. The portable camera also greatly improves operator safety, by detecting emissions at a safe distance, and helps to protect the environment by tracing leaks of environmentally harmful gase.

SF_6 is used in the electric power industry as an insulator and quenching medium for gas-insulates substatios and circuit breakers.

TC706 – Great choice for Gas Leaks Detection

Hand shank and view finder could rotate simultaneously, easy for observation

TC706 Unique Feature:

- Adapt passive thermal imaging technology, could accurately find the leakage point at long distance without power supply shutdown.
- Using Cooled QWIP detector, enjoy superior image quality and accurate temperature measurement.
- Voice and video recording function.
- HD OLED view finder, combined with 5” touch rotating screen, suitable for many on-site using.
- No specific background and auxiliary light needed, suitable for many on-site checking.
- Small size, light weight and easy operation, suitable for single person on-site using.

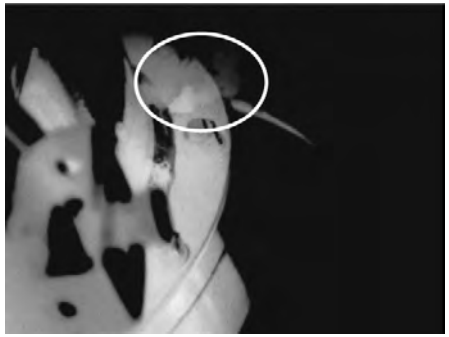

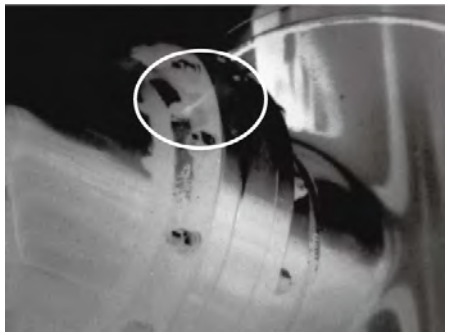

Examples of leak detection

AMPERIS PRODUCTS S.L
Agricultura,34
27003, Lugo, Spain

Contact

+T [+34] 982 20 99 20 | F [+34] 982 20 99 11
info@amperis.com | www.amperis.com

Technical parameters TC706			
Detector characteristics	Detector type		Cooled QWIP
	Array size/format		320×256
Image manage	Field of view/min focus distance		14,5°×10,8°/0,5m or 24°x18°/0,3m
	Spatial resolutions(IFOV)		0,79mrad or 1,13mrad
	NETD		≤0,025℃@30℃
	Frame rate		60Hz
	Focus		Auto / Manual / Motorize
	Zoom		1-4x electronic zoom
	Spectral range		9,8 – 11,2μm – peak 10,55μm
	CCD		1,3 million CMOS
Image display	View finder		HD 0,6” color OLED, with zoom
	LCD		HD 5” color digital touch screen, 800x600
Measurement	Temperature ranges		-40℃～+500℃
	Accuracy		±2℃ or ±2% of reading, whichever is greater
	Measurement correction		Auto/Manual
	Mode		Up to 10 movable spots. Up to 5 movable areas (maximum, minimum and average temperatures). Up to 2 movable lines. Line profile. Isotherm. Temperature difference. Alarm (voice, color)
	Image control	Color pallete	11 pallettes changeable (Iron, Rainbow, Grey and Grey inverted, etc)
		Image adjustment	Auto/Manual adjustment of contrast and brightness
	Setup		Date/time, temperature unit °C/°K/F, language
	Emissivity correction		Variable from 0.01 to 1.0
	Background temp adjustment		Auto, according to the background temp
	Atmospheric transmission correction		Automatic correction according to user input object distance, humidity and temperature
Image Save	Storage Card		8G SD card, storage > 6000
	Storage Mode		Manual/automatic single-frame image storage, continuous visible, infrared video recording
	IR image	Single frame	JPEG, 14 bit thermal image with measurement data
		Video	MPEG-4 or 14 bit thermal image with measurement data
	Visual image	Single frame	JPEG
		Video	MPEG-4
	Voice annotation		40s., saved together with the image
	Image improvement		Averaging (S2, S4, S8, S16), spatial filter
Laser pointer	Power supply		Second level, 1mW/635nm(red)

AMPERIS PRODUCTS S.L
Agricultura,34
27003, Lugo, Spain

Contact

+T [+34] 982 20 99 20 | F [+34] 982 20 99 11
info@amperis.com | www.amperis.com

Power supply	Battery type	Li-Ion, rechargeable
	Battery operating time	3 hours continuous operation
	Charging system	Intelligent charger or power supply adaptor online charge
Power system	Power saving	Yes
	External power	10 – 15 V DC
Environment	Working temp	-15 ℃ - +50 ℃
	Humidity	≤ 90% non-condensing
	Encapsulation	IP54
Physical characteristics	Weight	3 Kg
	Dimension	335x160x172mm
Interface	External DC Input	Yes
	Audio output	Yes
	Video output	HDMI
	USB 2.0	Image, measurement data and voice transfer to PC

AMPERIS PRODUCTS S.L
Agricultura,34
27003, Lugo, Spain

Contact

+T [+34] 982 20 99 20 | F [+34] 982 20 99 11
info@amperis.com | www.amperis.com

The Micro-Detective-HX

The ORTEC Micro-Detective-HX is the most advanced hand held radioisotope identifier (RID) commercially available.

Micro-Detective-HX

Advanced Hand-Held Radiation Detection and Identification RIID

The "-HX" is the commercial embodiment of additional development carried out under contract between AMETEK and the U.S. Department of Homeland Security.

- Wireless Remote Monitoring - Remotely control and monitor from a central location
- Portable - Light weight, long battery life, "one-hand" operation with GPS location
- Simple to Operate - Touchscreen or push button with audible and visual alarm indicators
- Rugged - High or low temperatures, water proof, dust proof and drop hardened
- Superior Algorithms - Low false alarm rates, more than 150 nuclide IDs and superior SNM search
- Gamma and Neutron Detection - Identification, dose rate and count rate
- Detects and Identifies x-rays and gamma rays in any form (solid, liquid, or gas)
- Auto Calibration - Continuous real-time detector stabilization
- Detective-Remote Compatible - Use as a mobile, transportable or choke point monitor

Read more about the ORTEC Micro-Detective-HX

Micro-Detective/Micro-trans-SPEC Battery Upgrade

©Copyright 2010-2014 AMETEK, Inc. All Rights Reserved. www.ametek.com

ORTEC®

Micro-Detective-HX

Enhanced Capability, Ultra-Light, High-Fidelity
Hand-Held Radioisotope Identifier

AMETEK®
ADVANCED MEASUREMENT TECHNOLOGY

Micro-Detective-HX

- Wireless Remote Monitoring – Remotely control and monitor from a central location.
- Portable – Light weight, long battery life, "one-hand" operation with GPS location.
- Simple to Operate – Touchscreen or push button with audible and visual alarm indicators.
- Rugged – High or low temperatures, water proof, dust proof and drop hardened.
- Superior Algorithms – Low false alarm rates, more than 150 nuclide IDs and superior SNM search.
- Gamma and Neutron Detection – Identification, dose rate and count rate.
- Detects and Identifies x-rays and gamma rays from radioactive sources in any form (solid, liquid, or gas)
- Auto Calibration – Continuous real-time detector stabilization.
- Detective-Remote Compatible – Use as a mobile, transportable or choke point monitor.

Micro-Detective-HX is the latest development of high purity germanium (HPGe) based hand-held radioisotope identifiers "RID"s. The "-HX" is a commercially available version hand-held that includes additional features carried out under contract with the U.S. Department of Homeland Security.[1]

The Micro-Detective-HX Features

- 40% lighter than industry-leading ORTEC Detective-EX.
- 50% reduction in overall size.
- Simple to operate: Bright, clear, SUNLIGHT READABLE display, touch sensitive screen, and intuitive menus.
- Rugged: Enclosure, display, and all perforations are sealed against moisture and dust.
- Built in neutron detector.
- Built in GPS.
- Removable data storage SD card.
- WiFi 802.11 wireless communications.
- Wireless Mobile MCB Server software.

Plus the latest improvements

- Operating time of up to 5 hours on a single battery.
- "Snap-open" battery door for rapid battery exchange with minimal down-time.
- New improved, silent running, low-power cryo-cooler.

[1]The contract was awarded by the U.S. Department of Homeland Security (DHS) Domestic Nuclear Detection Office (DNDO) under the Human Portable Radiation Detection System (HPRDS). The HPRDS program began in 2006 in order to develop next-generation hand-held devices that would bring faster and more reliable means to detecting and identifying radioactive materials. Of the five contractors initially chosen to improve and enhance their radiation identification technology, AMETEK recently was selected by DHS to continue in the HPRDS program.

Micro-Detective-HX

Hardware

The Micro-Detective-HX features compact, light weight and rugged hardware. A 50 mm diameter HPGe crystal in a "hardened" cryostat is cooled by an integrated low-power Stirling-cycle cryo-cooler. The latest version Micro-Detective-HX features a new cooler, offering reduced levels of accoustic noise and vibration, and longer operation life. The hardened cryostat is entirely free of conventional molecular sieve, allowing the instrument to be turned off or on at any point in the detector cool down or warm up cycle without risk. This is impossible with conventional HPGe cryostat systems which require careful temperature cycling procedures to avoid damage.

A built-in digital MCA system and powerful data processor are included. All models feature the same bright and clear VGA resolution display, readable in direct sunlight, with a touch sensitive operator screen. Menu navigation is highly intuitive. The radionuclide gamma-ray spectrum may be displayed and manipulated (e.g., vertical scale, zoom) like a conventional multichannel analyzer.

Gamma and neutron count rate and gamma dose rate are displayed continuously both numerically and in bar graph form.

In the latest version, the Micro-Detective-HX internal battery provides enough power for up to 5 hours of operation and is easily replaced in seconds, allowing continuous in-field operation. At just under 16 lbs. in weight, the Micro-Detective sets a world record for portable, high resolution nuclide identifiers, by a wide margin.

The snap-open battery compartment makes battery changing simple.

Desktop battery charger (MICRO-DET-ACC-CHGR). Recharges battery (MICRO-DET-ACC-BAT) in 4 hours.

Exclusive to the -HX

- One-handed control of instrument through two handle-mounted buttons, or though touchscreen.
- Visual Alarms: LEDs provide clear and simple indication of nuclide type: threat, innocent or suspect, plus error indication.
- Vibrating alarm built into handle.
- 3-level auditory alarms can be routed through headphones.

-HX Software Approach

HPGe is already acknowledged as the "perfect" detector for a radioisotope identifier. It has ~40 times better energy resolution (selectivity) than the nearest alternative. Unlike lower-resolution detector types, HPGe crystals must operate at cryogenic temperatures — an engineering issue ORTEC solved 25 years ago. Several hundred Detective family instruments in the field attest to the reliability of today's miniature Stirling cycle coolers used for this purpose.

Beyond the intrinsic selectivity of the HPGe detector type, the ultimate performance in terms of its fidelity of identification (zero false positives or false negatives is the goal) depends on the software algorithms. Its practicality in use depends on reliable hardware and a user interface which is easy to learn and interpret.

The Micro-Detective-HX performance has been enhanced with the introduction of the new Detective-Pro user interface. Further reductions in both false positive and false negative results have been achieved, combined with a new design user interface and new modes of operation.

The Detective-Pro User Interface is

- Clear.
- Simple and intuitive.
- Informative.
- Based on simple-to-use hardware, even with one gloved hand.

Micro-Detective-HX

The Micro-Detective-HX in Use: Overview

From the hardware standpoint the user interface comprises:

- Two buttons on the front of the handle, Navigate (N) and Select (S), with which all survey and sampling operations can be performed.
- A high-resolution, sunlight readable, color touchscreen provides an alternative way to choose menu options and enter data such as passwords and alarm limits.
- Audio-visual feedback:

  Menus are designed to be operated with N and S buttons only, but if preferred, the touchscreen is always available.

  On-screen help messages display radiation and system error alarms. The messages tell the user what the next press of the N and S buttons will do.

  An audio alarm with three volume settings can be used with headphones and a vibration alarm is provided in the handle. Either, both, or neither can be enabled.

  A 4-LED panel is used to further inform the operator of alarm conditions.

  Color coding of the LEDs and screen borders match in order to make the instrument as intuitive as possible: red for threat, yellow for suspect and green for innocent.

  Indicators at the top of the screen show the current dose rate in mrem/hr, the number of spectra that can be stored on the SD card, GPS co-ordinates, the power source (external power or battery), battery time remaining, and the on/off state of the audio and vibration alerts. The storage-space and battery-time-remaining readouts alternate every few seconds.

  When radiation is detected and identified, the identification is posted to the real-time identification area of the screen. This area lists the names of any radioisotopes currently being detected and their classification as a threat (T), suspect (S), or innocent (I). It can also optionally show whether the identification is at high (H) or low (L) confidence.[2]

[2]Note the only suspect alarm in standard sampling mode is "Elevated radiation or beta." This indicates the gamma count rate is higher than can be accounted for based on the peaks in the -HX library. The implication is that either an unexpected nuclide or a beta emitter is present.

Display and Control Buttons.

Press Select to Acknowledge
T:U-232

"Radiation Alarm."

Select: End Background
Navigate: Menus

Contextual Messages Give Function of the "S" and "N" Buttons.

Alarm LED Indicator.

Home
1.18 mrem/h Space: 401866

Indicators at Top of Screen.

Type	Source	Conf
S	Elevated radiation or beta	L
I	Cs-137	H
I	Th-232	H

Real-Time Identification Area.

T	Neutron CR 5.63	H

Press Select to Acknowledge
T:Neutron CR 1.24

Neutron Alarm.

Micro-Detective-HX

The Micro-Detective-HX in Use: Modes of Operation

How the -HX Collects and Analyzes Data

- A flexible approach to minimize time and maximize effectiveness.
- Continuous running and fixed time modes with "end survey summary."
- Maximum flexibility, maximum sensitivity.
- Adaptable to the chosen CONOPS design.

The -HX monitors for radiation at all times. It collects one spectrum per second, then begins analyzing a rolling window of the eight most recent 1-second spectra for radioisotope identification and alarms.

- "Home" or "Passive Monitor" mode is the simplest form of operation. In this mode, the -HX is continuously "looking," but not storing data.
- In "Detect" or "Survey" mode, the instrument stores the 1-second data slices and attempts to make an ID based on the 8-second rolling windows.
- Optional "Long Samples" or "Fixed Samples," performed during the "Detect" mode survey, add longer spectrum acquisitions to the data stream of 8-second rolling-window analyses.
- The "End Survey Report" is a cumulative analysis of all 1-second data slices in the survey, providing increased detection sensitivity for weak or distant sources.

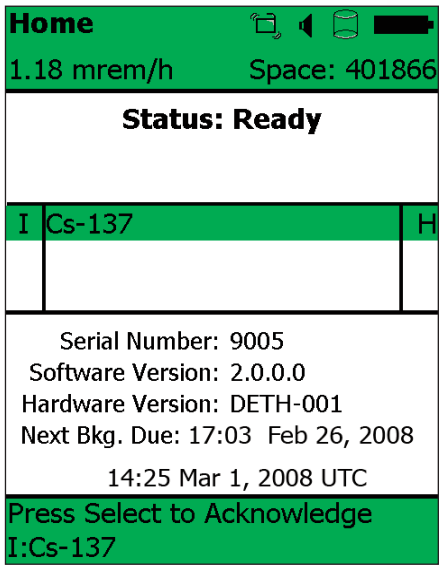

Home (Passive Monitor Mode), Innocent Cs-137 (Green Color Code).

Modes of Operation: Home (Passive Monitor) Mode: "Always Looking"

In Home (Passive Monitor) mode, the instrument is continuously "looking" but not storing data. Gamma dose-rate, battery life, storage space, and GPS co-ordinates are displayed. In this mode, the -HX acts like a survey meter in that if it is moved away from the source, the ID will be removed from the screen. However, any alarm posted persists and must be acknowledged (cleared). Data is gathered and processed in 1-second time slices. The -HX analyzes an 8-second rolling window of these slices and attempts to make an ID. Nuclide IDs are posted to the Real Time ID area.

Modes of Operation: Detect Mode (The Survey Concept)

Detect mode is used to better locate and identify sources. A Survey always begins with a Detect mode measurement, and can include Long and Fixed Sample mode (see below) operations also. The -HX can be set to automatically start a survey immediately after it is removed from charge or a survey may be started manually. 1-second data slices are saved to an ICD1/ICD2 file pair (see specification section) on the removable SD card. As in the Passive Monitor mode, the -HX attempts to make an ID based on an 8-second rolling window. At the upper part of the screen, the color-coded strip chart records Signal Index (cumulative activity of ALL nuclides identified). The chart peaks at the location of greatest activity. The lower chart shows the Threat Material Index similar to the Signal Index, but for threat material only. To the right of each strip chart, a vertical bar and numeric value is used to show the current value of the signal and threat indices. If appropriate to the measurement, alarm IDs are displayed in the Real Time ID area and must be acknowledged.

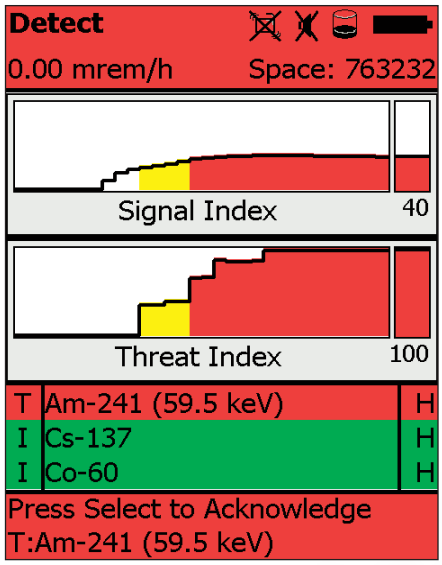

Detect Mode. Threat Am-241 (Red Color Code)

Micro-Detective-HX

Modes of Operation: Long and Fixed Sample Modes

During a Survey, in the Detect mode measurement, a source may have been located and closer scrutiny desired. Long or Fixed Sample modes may be used to achieve this. In Long Sample mode, a single spectrum is acquired for 30 or more seconds and analyzed once per second for alarms. Fixed Samples are treated similarly but have preset durations of 5, 10, 15, 20, 25, 30, 60, 120, or 300 seconds. In Long Sample mode, the live spectral display can be viewed. Long and Fixed Sample spectra and analyses are saved in the ICD1/ICD2 file pair for the Survey, along with the rolling-window and cumulative-analysis data.

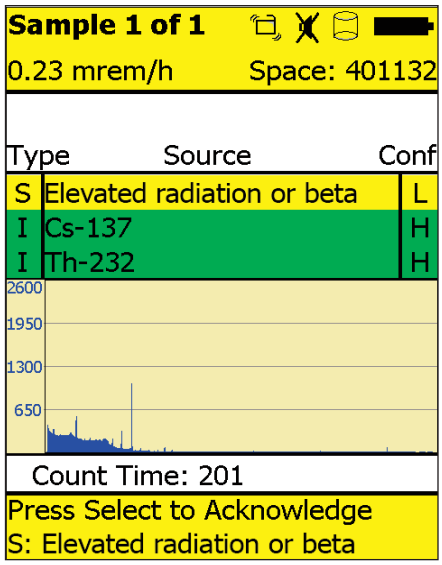

Long Sample Mode with Selectable Spectral Display.

"End Survey Report"

A Survey is started manually or automatically, as described above. Apart from the Detect mode operation, a survey may include either single or multiple long or fixed sample mode measurements. When a Survey is terminated by the operator, an "End Survey" summary report is displayed containing the following:

- Any alarms derived from the 8-second rolling window mode of operation which starts every survey,
- Any alarms derived from an analysis of a cumulative spectrum representing the summation of all the 1-second slices gathered during the survey, thereby attempting to ID any low intensity components which the rolling window analysis might have missed; the cumulative spectrum and analysis data are added to the ICD1/ICD2 file pair for the survey.
- Any alarms derived from those Long and Fixed Sample measurements included in the survey.

Modes of Operation: HX-LCX Operation — For the Expert

The LCX mode is "Low Confidence Expert" mode. This mode is password protected, and displays threat alarms and identifications at an approximately 30% lower confidence level than normal. This results in more "hits" on suspected threat nuclides, and is recommended for use by experienced personnel. Normal mode operation, in contrast, would either not post a threat alarm because the confidence level is too low, or would simply post an elevated radiation or beta alarm rather than listing a specific radionuclide.

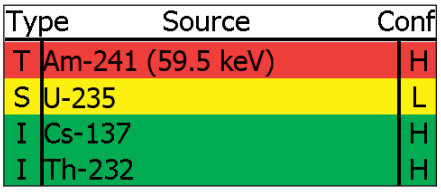

LCX Mode Real Time ID Area – Suspect Identification.

The -HX and Background Radiation — No more NORM alarms

The -HX can distinguish between radioactive materials in the environment and the sample, so it does not indicate the presence of activity which is actually due to background. It does this by making periodic background measurements according to a schedule. A user with password access can choose the number of days between required background checks. If the required background update is not performed, the -HX permits unlimited passive monitoring but will not enter Survey Mode. However, even with an expired background, the -HX provides proper, real-time identifications of SNM, RDD, and other threats.

The -HX and Digital Stabilization — Making the best of it

Although a digital germanium spectrometer is a highly stable instrument, even with varying temperatures, the -HX is designed for use in conditions that could be considered extreme (which certainly are not recommended but, within the specified mechanical and environmental limits, are not a barrier to correct operation). An automatic gain stabilizer system "locks onto" the natural background K-40 peak (if present) to ensure "perfect" calibration is maintained even in conditions of harsh handling. The stabilizer is "smart." If either the K-40 is determined as being absent, or if a potential gamma-ray interference with the K-40 peak is determined to be present, the stabilizer will be held at a constant setting.

The -HX Nuclide Library

The Micro-Detective-HX has a very comprehensive nuclide list. A subset of the entire nuclide library is the default "Threat Isotopes"; these are marked in RED in the table. The advanced user is able to add any of the nuclides marked in GREEN in Table 1 to the list of red-marked threat isotopes. The color coding in the table shows the default background screen colors and visual alarms the instrument will present when these nuclides are encountered. The YELLOW "suspect" alarm will be posted on the basis of excessive gamma count rate not consistent with the identified nuclides, in other words, either unknown nuclides are present or a beta emitter is present.

Table 1. -HX Nuclide Library.

HEU	Enriched Uranium	U-235	Pu-239	Np-237	U-233
Neutron CR (xx.x cps)	Neutrons Present	U-238	U-232	U-232/Th-232	Am-241
Am-241 (Shielded)	Am-241 (59.5 keV)	Ac-225	Ac-227	Ag-110m	Ar-41
As-72	As-74	At-211	Au-198	Ba-133	Ba-140
Be-7	Bi-207	Bi-212 (Th232/U232 daughter)	Bi-214 (Ra226 daughter)	Br-76	Br-76 (shielded)
Br-76 (heavily shielded)	Br-77	Ca-47	Cd-109	Cd-115	Ce-139
Ce-141	Ce-144	Cf-252/Cf-249	Cm-242	Cm-243	Cm-244
Co-56	Co-56 (shielded)	Co-55	Co-57	Co-58	Co-60
Cr-51	Cs-131	Cs-134	Cs-137	Cu-64	Cu-67/Ga-67
Eu-152	Eu-154	Eu-155	Eu-156	Fe-18	Neutrons on Fe
Fe-59	Elevated radiation or beta emitter	Ga-64	Ga-64 (shielded)	Ga-67	Ga-67 (shielded)
Ge-68/Ga-68	Gd-153	Gd-159	Hf-181	Hg-203	Ho-166m
Ho-166m (shielded)	Ho-166	I-123	I-123 (shielded)	I-124	I-125
I-126	I-126 (shielded)	I-131	I-131 (shielded)	I-132	I-133
I-134	I-135	In-111	Ir-192	Ir-192 (shielded)	Os-194/Ir-194
Ir-194 (shielded)	K-40	Kr-87	Kr-88	Kr-88 (shielded)	La-140
Lu-172	Lu-176	Lu-177	Lu-177m	Mn-52	Mn-54
Mn-56	Mo-99	Na-22	Na-24	Nb-94	Nb-95
Nb-96	Nb-96 (shielded)	Nd-147	Pa-231	Pb-203	Pd-103
Rh-105	Ru-97	Ru-106/Rh-106	Po-210	Pr-144	Ra-223
Ra-226	Ru-103	Sb-124	Sb-124 (shielded)	Sb-125	Sb-127
Sc-46	Se-75	Sm-153	Sm-153 (shielded)	Sn-113	Sr-82/Rb-82
Sr-85	Sr-89	Sr-90/Sr-89/Y-90	Ta-182	Tc-96	Tc-99m
Te-132	Tl-201	Tl-200	Tl-202	Tl-204	Th-229
Th-230	Th-232	Tm-170	Tm-171	W-188/Re-188	Xe-127
Xe-133	Xe-131m	Xe-135	Y-88	Y-91	Yb-169
Zn-65	Zn-62	Zr-95			

Micro-Detective-HX

Micro-Detective-HX Offline Analysis Program

- Views the spectral contents of -HX data files, real time and live time for each spectrum contained in each, radioactive sources identified (if any), and alarm types associated with each identification.
- Reanalyzes the data set with different nuclide libraries (at present there is only one).
- Exports all spectra in an -HX file to a set of ORTEC .CHN format spectrum files. The .CHN files can then be viewed and analyzed in more detail with ORTEC applications such as the GammaVision Gamma-Ray Spectrum Analysis and MCA Emulator.

The Micro Detective-HX Offline Analysis Program is a utility supplied with every instrument. It is run on a PC and provides extended functionality for use post-analysis.

The key features of the program are listed below.

1 Toolbar — Click to issue the main program commands.

2 File Information Section — Displays the name of the ICD1/ICD2 file pair currently open; its Location; and the instrument with which it was acquired, including the firmware version and the unit serial number (ID).

3 Spectra List — Lists all the component spectra in the current ICD1/ICD2 file pair, including the background spectrum, any 8-second "rolling window" Detect Mode spectra, any Long or Fixed Sample spectra, and the final cumulative spectrum.

4 Export Button — Exports all the component spectra in the current ICD1/ICD2 file pair to a set of ORTEC .CHN format spectrum files.

5 Analysis Results Section — Lists the nuclides found (if any), including the threat type (innocent, suspect, or threat), dose rate in mrem/hr, and confidence level (H — high or L — low). In conjunction with this list, the three simulated LED readouts "light" according to the innocent (green), suspect (yellow), and/or red (threat) nuclides identified.

6 Spectrum Window — A full-scale display (0 to 8191 channels) of the currently selected spectrum, in counts per channel, with logarithmic vertical scaling. This window includes a vertical marker line which can be moved with the mouse.

7 Marker Information Line — Shows the energy, in keV, and counts per channel for the current marker position.

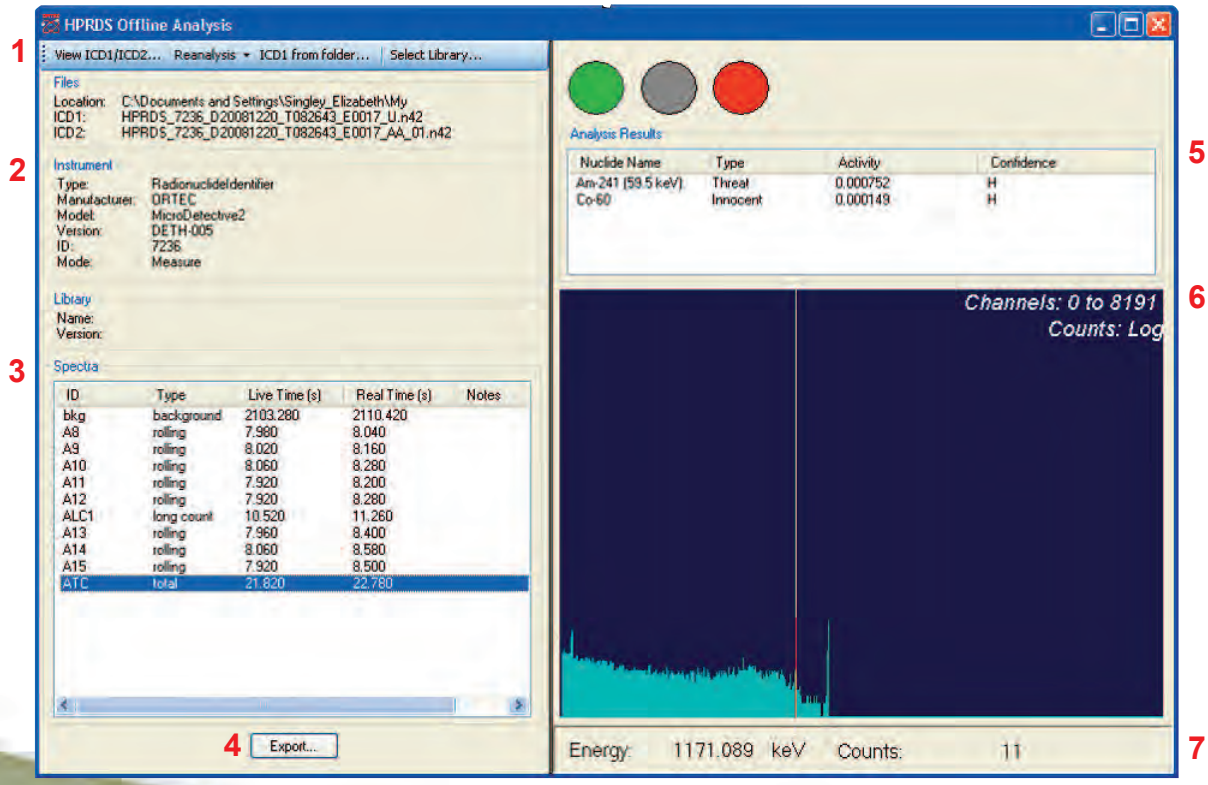

Micro-Detective-HX

Micro-Detective-HX Technical Specifications

Dose Rate Visual over range indication and continuous audible alarm, user settable. Over-ride alarm at dose rates >10,000 µSv/hr.

Internal HPGe Detector P-type high-purity germanium. Coaxial construction. Crystal Nominal Dimensions 50 mm diameter x 40 mm length.

Cryostat and Cooler "Hardened" cryostat, with high-reliability, low-power Stirling cooler. The cryostat design is such that the Micro-Detective-HX may be switched off at any time and power subsequently re-applied, without having to wait for a full thermal cycle (full warm up before cool down), as is normal practice with a HPGe detector system. This feature greatly increases system availability during measurement campaigns.

Gamma Dose Rate Detector Two detectors determine the gamma dose rate over a wide range from <0.05 µSv/h to >10000 µSv/h, a dose-rate range of around six decades. For low dose rates, below ~20 µSv/h, the dose rate is determined from the Ge detector spectrum. For dose rates above this value, the internal compensated GM tube is used. Instrument switches between the two automatically.

Dose Rate Uncertainty <(–50% to +100%); continuous audible alarm at dose rates >10,000 µSv/h (fixed maximum threshold), user settable threshold below this.

Internal Neutron Detector Module Single ^{3}He tube: 4" active length, 0.5" diameter, 20 atm He^3 fill pressure. High density Polyethylene moderator. 5.5 in x1.3 in x 1.3 in. approximately.

Digital MCA and Data Processor

Display VGA 640 x 480 TFT sunlight readable, touch sensitive, operate with finger or stylus.

Data Processor Marvel 806 MHz XScale.

Data Storage

Media To internal RAM and removable SD card.

Storage Scheme In passive monitor mode, no data files are saved. In Survey mode and Long and Fixed sample mode, ICD1 and ICD2 files are stored.

File Format DNDO ICD format (similar to ANSI N42.42) for data and results.

These files may be read, reanalyzed and exported to the Micro-Detective-HX Offline Analysis Program, which is included with the instrument. Exported files are in the well known ORTEC ".CHN" format and may be read by many programs used by Reachback teams such as CAMBIO and by ORTEC products such as MAESTRO and GammaVision.

Computer Interfacing USB connection to laptop. Data transfer by Microsoft® ActiveSync. Wi-Fi (802.11) communication software. Wireless Mobile MCB Server software.

GPS Internal NMEA compliant WAAS capable.

Digital MCA with Internal Storage of Multiple Spectral Data

Digital Noise Suppression "LFR Filter" ORTEC Patent Pending.

Conversion Gain 8k channel.

Maximum Number of Stored Spectra Unlimited on removable media.

Maximum Overall Dimensions (including handle, Ge detector endcap and shock absorbers) 14.7 in L x 5.75 in W x 11 in H (37.4 cm L x 14.6 cm W x 27.9 cm H).

Weight 15.2 lbs (6.9 kg).

Internal Battery Lithium Ion. 14.4 V, 6.2 Ah, 89 Wh, nominal. Up to 5 hours of battery life at 25°C when HPGe detector is cold. <4 hour time to charge. Internal battery is easily swapped through removal of snap shut battery door.

External Battery Battery lifetime may be extended indefinitely by the use of external battery packs. DETECTIVE-OPT-15 is recommended, weighs less than 3.25 lbs and extends lifetime to >10 hrs.

Input Power 10 to 17 V DC from battery or DC power supply (universal mains supply included). Battery charger circuit is inside instrument.

Power Usage Strongest during cool down: <100 Watt. While charging Battery: 5A nominal. Cold with fully charged battery <2A.

External Power DC Input and battery Charge Input. 2.5 mm coaxial connector with locking screw on collar.

Temperature

Operation Range: –10°C to 40°C.

Relative Humidity: <90% at 35°C, non-condensing.

Instrument Enclosure Sealed against ingress of dust and water. All perforations are sealed by rubber plugs (connectors, memory cards, etc.). Instrument is not designed to tolerate immersion.

External Connectivity to System

1 SD (Secure Digital) card slot (3.3 V).

1 USB connection for "ActiveSync" capability or MCA operation with external computer (ActiveSync and remote display software included).

Wi-Fi 802.11 communication software.

Wireless Mobile MCB Server software

1 Audio headphone jack.

Cool Down Time The high reliability cooler is designed for continuous operation. Between making measurements the unit is powered from a DC supply, car battery or other high capacity device. Initial cool down time depends on ambient temperature, but is typically <12 hours at 25°C.

Communication Software

The Micro-Detective-HX is a member of the ORTEC CONNECTIONS family. Remote MCA control and individual spectrum download, even over a network, is achieved simply, by the use of ORTEC CONNECTIONS products such as MAESTRO MCA Emulation software.

Multiple spectra may be block-transferred from the instrument controller to external PCs by the use of Microsoft ActiveSync. Third party products such as SOTI "Pocket Controller Enterprise" may be used to implement the 802.11 wireless feature to provide remote wireless control of the complete Micro-Detective-HX.

Mobile MCB Server

The Mobile MCB Server software application enables any ORTEC portable instrument installed with a PDA to communicate wirelessly with ORTEC software applications such as MAESTRO, GammaVision, and Detective-Remote. The Mobile MCB Server acts like a wireless version of the USB connection, allowing users to control and monitor any portable spectrometer through a wireless network.

Users can develop their own applications through the use of the optional A11 tool kit.

Micro-Detective-HX

Ordering Information

Model	Description
MICRO-DETECTIVE-HX	Light-Weight, Portable HPGe Identifier (Gamma and Neutron). Includes GPS, mains adapter, battery cable, shoulder strap, softside carry case and Microsoft ActiveSync software.
MICRO-DET-HX-PKG-1	Includes MICRO-DETECTIVE-HX Light-Weight, Portable HPGe Identifier (Gamma and Neutron), GPS, mains adapter, battery cable, shoulder strap, Microsoft ActiveSync software, MAESTRO software, and hardside wheeled transport case.
MICRO-DET-OPT-1	Rugged, waterproof, wheeled transport case.
DETECTIVE-OPT-15	Ultra battery extender.
MICRO-DET-ACC-BAT	Lithium-ion battery.
MICRO-DET-ACC-CHGR	Standalone battery charger and calibrator kit.
DETDX-EX-MCB-SW	Mobile MCB Server add-on software module for existing Detective family instruments installed with a PDA.
DET-SW-UPG	Upgrade to complete Detective-Pro PDA Software Application package.

Further battery charging and upgrade options are available.

Note: This brochure relates to instruments with the following revision levels:

Micro-Detective-HX Rev. N or later

Specifications subject to change
051415

ORTEC®
www.ortec-online.com
Tel. (865) 482-4411 • Fax (865) 483-0396 • ortec.info@ametek.com
801 South Illinois Ave., Oak Ridge, TN 37831-0895 U.S.A.
For International Office Locations, Visit Our Website

AMETEK®
ADVANCED MEASUREMENT TECHNOLOGY

AT2S Series - Two Stage (2.5W) TE Cooled SCD-13 Detectors

Ambient Temperature:	+25°C
Detector Operating Temperature	See model types below
Typical Cooler Power @/or near Max. Cooling:	1.8 volts @1.2 amps

Standard Specifications - Electrical
All detector specifications are at a bias voltage of 50 V/mm distance between electrodes applied across the detector and with a one megohm load resistor in series. All specifications apply at or near maximum cooling with the heat sink @ +25°C.

	Minimum	Typical	Maximum	Units
Wavelength of Max. Response	2.6	2.7		µm
D*(500K, 650 Hz, 1Hz)	2.2×10^9	3.3×10^9		cm $Hz^{1/2}$ w^{-1}
D*(I_{pk}, 650 Hz, 1 Hz)	2.0×10^{11}	3.0×10^{11}		cm $Hz^{1/2}$ w^{-1}
Element Resistance (Dark)	3.0	6.0	20.0	Megohms/□
Time Constant (not measured)		1750	3500	µsec
Rated Element Temperature			+65	°C
ΔT@/or near Max. Cooling	70	75		°C

For square or rectangular element sizes and/or packages not listed, please contact our application engineers, phone (707) 303-3837, or fax (707) 545-5113.

When using the table below, remove parenthesis and insert appropriate designation for package type in this space: Example: 6 for TO-66, 8 for TO-8.

Model Number	Element Size (mm)	Responsivity (λ_{pk}, 650) vw-1		Operating Temp	Standard Package Options
		Minimum	Typical		
AT2S-1( )	1 x 1	1.4×10^6	2.1×10^6	-50°C	TO-66, TO-8
AT2S-2( )	2 x 2	7.0×10^5	1.1×10^6	-50°C	TO-66, TO-8
AT2S-3( )	3 x 3	4.3×10^5	6.5×10^5	-45°C	TO-66, TO-8
AT2S-4( )	4 x 4	3.3×10^5	5.0×10^5	-40°C	TO-66, TO-8
AT2S-5( )*	5 x 5	2.7×10^5	4.0×10^5	-35°C	TO-66, TO-8
AT2S-6( )*	6 x 6	2.4×10^5	3.6×10^5	-25°C	TO-66, TO-8
* Minimum D*(λ_{pk}, 650, 1) $\geq 1.0 \times 10^{11}$ cm $Hz^{1/2}$ w^{-1}					

- To specify thermistor option for all TE cooled detectors, add the suffix -T or -TC (calibrated) to the model number.

CANBERRA

Cryo-Cycle™ II Hybrid Cryostat

Features

- LN_2 redundancy
- Non-CFC/non-flammable refrigerant
- Low power demand
- Same footprint as standard LN_2 Dewar
- Long life Pulse-Tube cooler Lifetime (L5) >75 000 hours of continuous operation
- Remote read-out and control
- Low vibration/low electrical noise
- Available in dipstick and integral configurations
- 2-year full warranty + pro-rated warranty on the cooler

Benefits

- Low operating cost
- Higher up-time
- Field installable (dipstick version)
- Quiet
- No compromise on detector specifications

Description

The CANBERRA Cryo-Cycle™ II is a unique offering in the field of cryogenically cooled radiation detectors. The Cryo-Cycle II is described as a "hybrid" cryostat because it combines the advantages of electric cooling with the reliability of liquid nitrogen. The long-life Pulse-Tube cryocooler, condenses the boil-off N_2 gas back into the 25 liter Dewar. This unique capability provides the convenience of operating a detector for 12 to 18 months before LN_2 needs to be added, but at the same time keeps the detector cold in case of power failure. With the Cryo-Cycle II the LN_2 supply keeps the detector cold for up to one week without power. There is no interruption of cooling. There is no down-time due to partial warm-up as long as LN_2 level is maintained. There is no risk of detector failure because of temperature cycling. LN_2 lost during power outages may be replenished at any time.

The Cryo-Cycle II comes with a number of improvements allowing us to answer our customers' requirements even better.

Key Improvements

- Reduced cooler vibrations
- Improved LN_2 level sensor probe
- Single front panel
- RS-232 and USB interfaces
- Alarm and autofill relay outputs
- A Graphical User Interface (GUI)

The audible noise has been reduced to less than 60 dB(A), measured at 1 m distance, making the Cryo-Cycle II well suited for application in quiet laboratory environments.

The new LN_2 level sensor probe provides better accuracy. The measured LN_2 level is displayed through a continuous LED indicator scale on the front panel, allowing to better schedule periodic refills.

Cryo-Cycle II Hybrid Cryostat

All controls, connectors and indicators are integrated in a single front panel for easy access. The Cryo-Cycle II contains an auto-ranging power supply at 100-240 V and 50-60 Hz. The front panel is equipped with a DB9-M, a RS-232 and a USB connector. The DB9-M is a relay output for system status alarms and autofill functions. The serial connectors are used to connect to a PC. A dedicated GUI allows remote control and status monitoring.

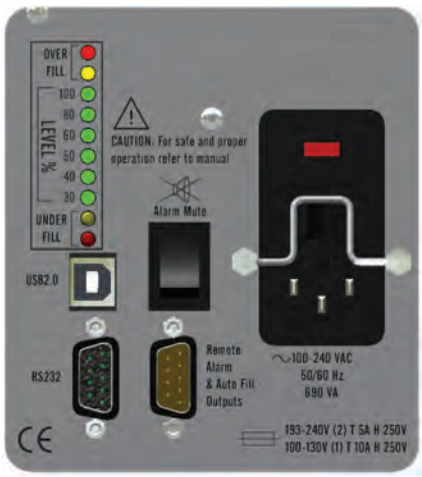

Cryo-Cycle II front panel layout

The GUI is available through a Windows®-based software application, provided with the Cryo-Cycle II. This application needs to be installed on a PC connected to the Cryo-Cycle II through the USB or RS-232 serial ports. Minimum operating system requirements are Windows XP (SP3) or Windows 7.

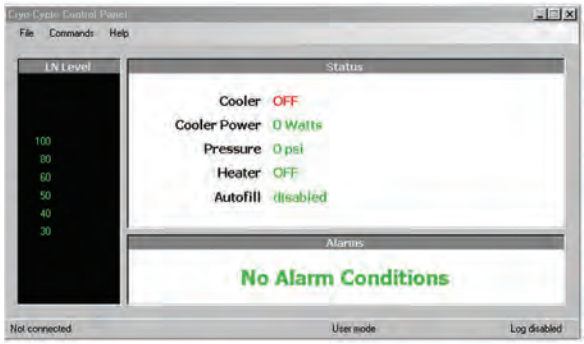

Screenshot of the Cryo-Cycle II control panel application

The application can be operated in User mode or in Supervisor mode. The User mode only allows status and parameter monitoring, while the Supervisor mode, which can be password protected, allows access to the available commands. The displayed parameters and status indications can be continuously logged to a user-selectable .txt-file, saved on the PC's hard drive. Also each Cryo-Cycle II can be given a system name, allowing easy identification when multiple systems are monitored through the same PC. This name will be displayed in the application's title bar.

The Cryo-Cycle II is designed to accommodate both dipstick and integral configurations. Dipstick versions can be installed in the field, while integral versions must be assembled at the factory.

Due to the improved microphonics performance of the Cryo-Cycle II, when it is sold with a new CANBERRA detector, there will be NO degradation of the detector's resolution performance as stated on the detector's specification sheet. If the dipstick version is installed on older CANBERRA detectors some degradation of resolution performance may occur, depending on the age and configuration of the detector. CANBERRA guarantees no resolution degradation at energies above 500 keV and a maximum of 10% between 100 and 500 keV. Performance is not guaranteed below 100 keV. For detectors not manufactured by CANBERRA, resolution performance cannot be guaranteed.

The highly reliable and efficient Pulse-Tube cooler (lifetime of >75 000 hours) used in the Cryo-Cycle II contains a CFC free and non-flammable gas. The cooler is hermetically sealed, so no gas-refill is required. The compressor contains no oil or lubricant, so no contamination of the refrigerant occurs and no periodic filter/dryer exchange is required. This makes the Cryo-Cycle II virtually maintenance free. The nominal power consumption is very low (250 W), with a maximum of 450 W in transient operation. The Cryo-Cycle II is designed to operate between 10 °C and 35 °C.

CANBERRA's confidence in the Cryo-Cycle II is demonstrated by the two year full warranty on the complete system (detector included when purchased together) and an additional pro-rated warranty on the cooler. If the cooler fails after the second year, it will be repaired or replaced at 40, 60 or 80% of the list price in year three to five respectively. This pro-rated warranty applies to parts only.

Cryo-Cycle II Hybrid Cryostat

Specifications

PERFORMANCE

- CANBERRA guarantees detector performance as warranted by detector model with cooler in operation (on new detectors purchased with Cryo-Cycle II).
- LN_2 loss rate <3 liters/day typically (with cryocooler OFF).
- MAINTENANCE – Cleaning as required to keep air flow unrestricted.
- LEVEL INDICATORS – Linear LED scale on front panel.

CONNECTORS

- USB 2.0 – Remote control and status read-out.
- RS-232 – Remote control and status read-out.
- DB9-M – Relay output.

COOLING

- Forced air (internal fans).

POWER REQUIREMENTS

- 100–240 V ac, 50–60 Hz, 690 VA max. (auto ranging power supply).
- FUSE – (2) T 5 A 250 V (193-240 V ac Operation). FUSE – (1) T 10 A 250 V (100-130 V ac Operation).
- NOMINAL POWER CONSUMPTION – -250 W.

PHYSICAL

COLD HEAD (Excluding detector chamber)

- DIMENSIONS – 43.2 cm (17 in.) diameter x 61.0 cm (24 in.) high.
- WEIGHT – 28.2 kg (62 lb) empty, without detector.
- DEWAR-CAPACITY – 25 liters.

ENVIRONMENTAL

- OPERATING TEMPERATURE – +10 to +35 °C (50 to 95 °F) on standard models and configurations.
- OPERATING HUMIDITY – RANGE: 20% to 80% relative non-condensing.
- Meets the environmental conditions specified by EN 61010, Installation Category I, Pollution Degree 2.

SOFTWARE

- SYSTEM REQUIREMENTS – Windows XP (SP3) or Windows 7 (32-bit).
- .NET framework 3.5 (will be installed if not present, requires internet connection).

AVAILABLE DETECTOR MODELS

- Cryo-Cycle II can be ordered with all standard GC-, GX-, GR-, BE-, and GSW-detector models (see applicable detector specification sheets for details).

ORDERING INFORMATION

Model	Description
CCII-VD	Cryo-Cycle II for model 7500SL or 7500
CCII-HD	Cryo-Cycle II for model 7600SL or 7600
CCII-VI-SL	Cryo-Cycle II vertical integral Slimline
CCII-VI-F	Cryo-Cycle II vertical integral Flanged
CCII-HI-SL	Cryo-Cycle II horizontal integral Slimline
CCII-HI-F	Cryo-Cycle II horizontal integral Flanged
CCII-HI-U	Cryo-Cycle II horizontal U-Style

ISO 9001 SYSTEM CERTIFIED

Cryo-Cycle II with Vertical Dipstick cryostat (CCII-VD)

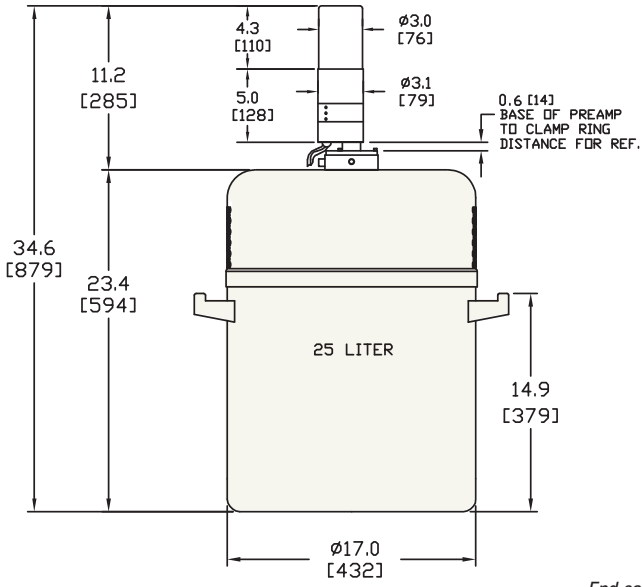

Side View

Cryo-Cycle II with 7500SL cryostat

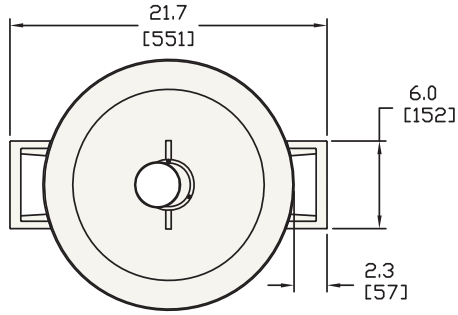

Top View

End cap dimensions depend on detector size. The tables below show the typical surface area or efficiency range vs. end cap diameter. End cap lengths are also greater for larger detectors. Consult the factory if end cap size is critical in your application.

LEGe/BEGe, Nom. Area (mm^2)	End Cap Diameter, mm [in.]
=<2000	76 [3.0]
2800	83 [3.25]
3800	89 [3.50]
5000	102 [4.0]
6500	114 [4.50]

Coax Rel. Efficiency (%)	End Cap Diameter, mm [in.]
=<40	76 [3.0]
40-50	83 [3.25]
50-70	89 [3.50]
70-100	95 [3.75]
100-120	102 [4.0]
120-150	108 [4.25]
150	114 [4.50]

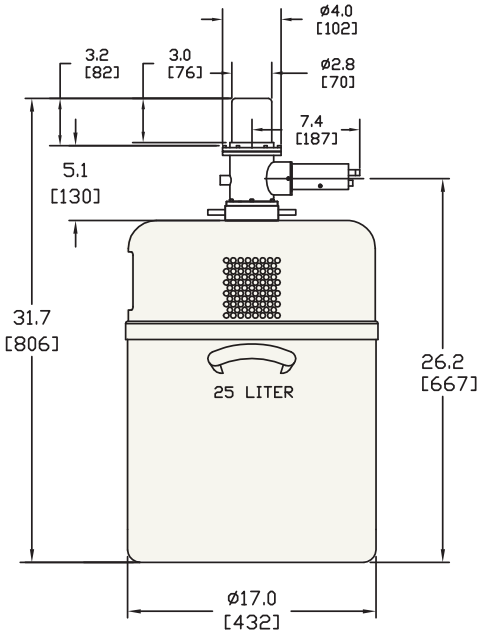

Side View

Cryo-Cycle II with 7500 cryostat

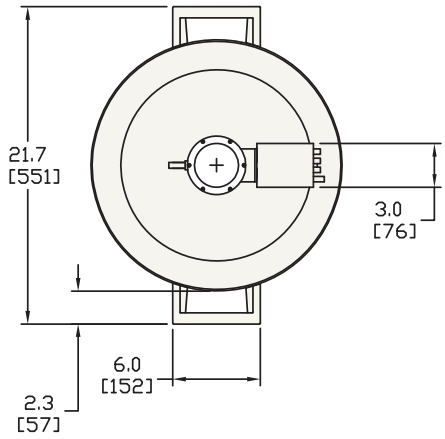

Top View

Cryo-Cycle II with Horizontal Dipstick cryostat (CCII-HD)

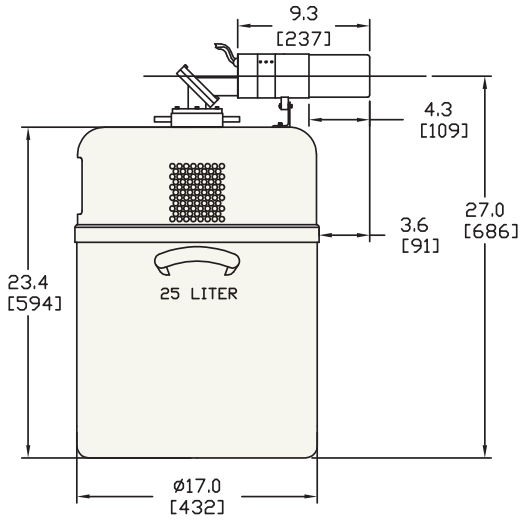

Side View

Cryo-Cycle II with 7600SL cryostat

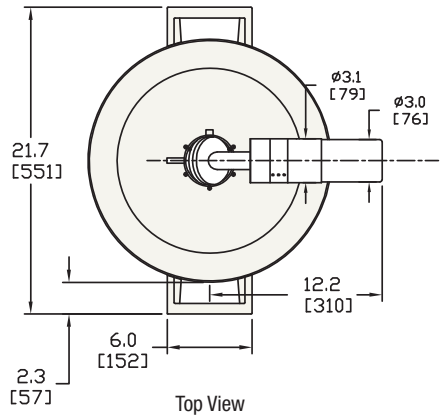

Top View

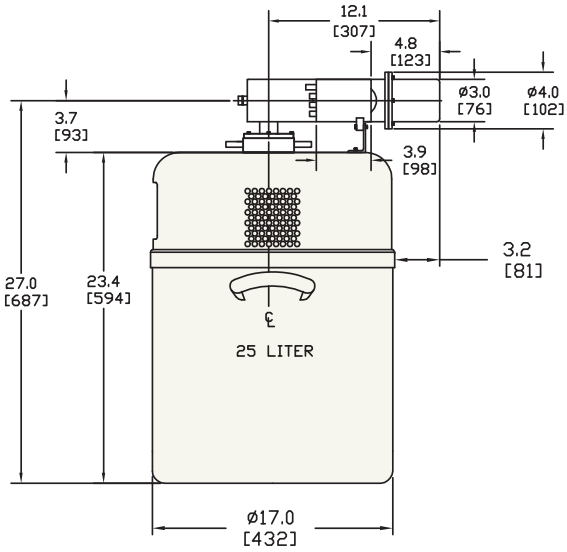

Side View

Cryo-Cycle II with 7600 cryostat

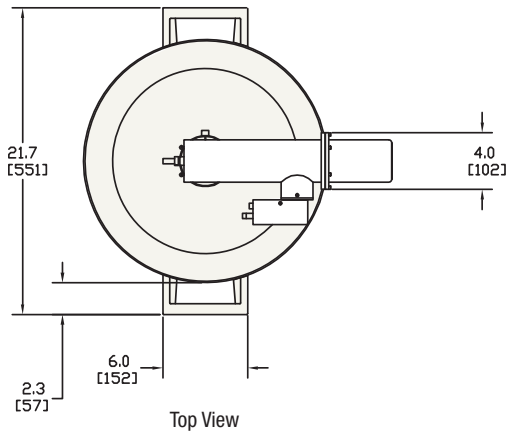

Top View

Cryo-Cycle II with Horizontal Integral cryostats

Cryo-Cycle II Horizontal Integral U-Style (CCII-HI-U)

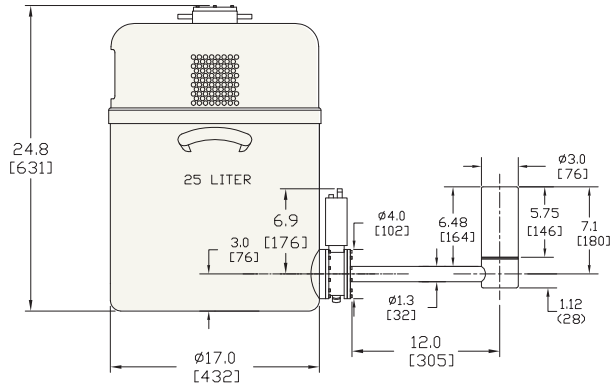

Side View

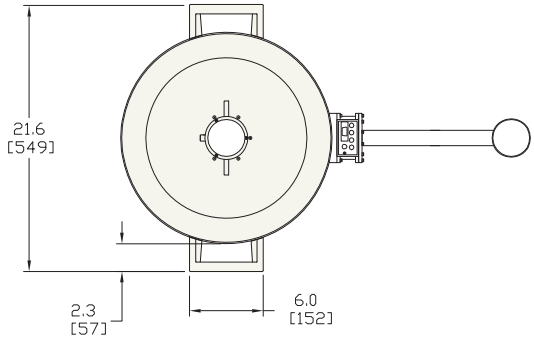

Top View

Cryo-Cycle II Horizontal Integral Flange Style (CCII-HI-F)

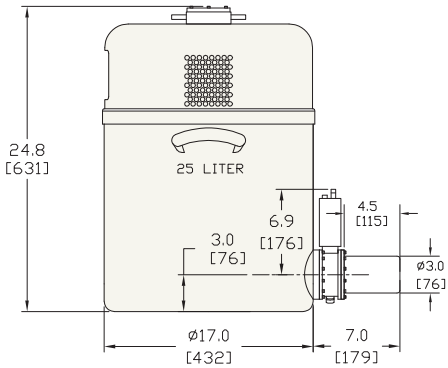

Side View

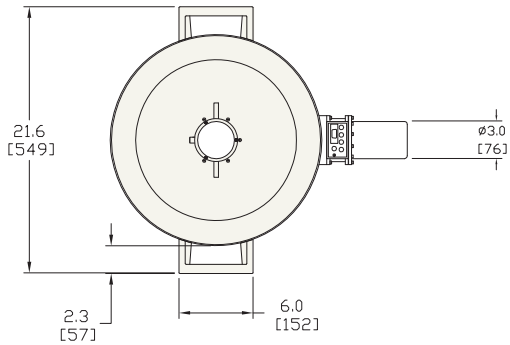

Top View

Cryo-Cycle II Horizontal Integral Slimline Style (CCII-HI-SL)

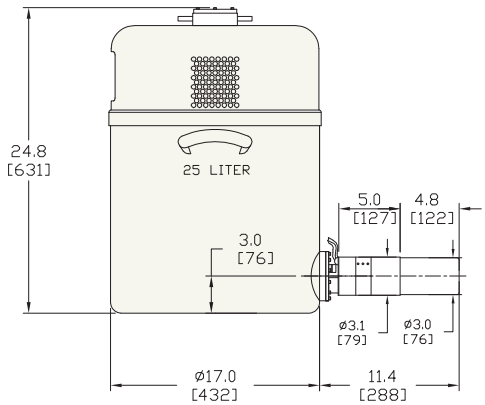

Side View

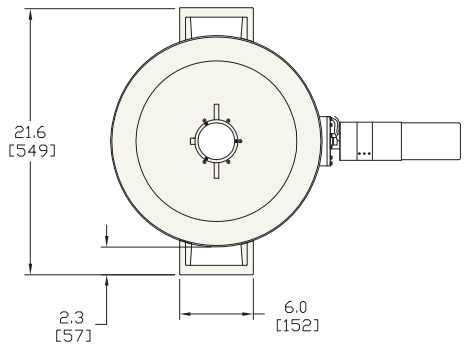

Top View

Cryo-Cycle II with Vertical Integral cryostats

Cryo-Cycle II Vertical Integral Flange Style (CCII-VI-F)

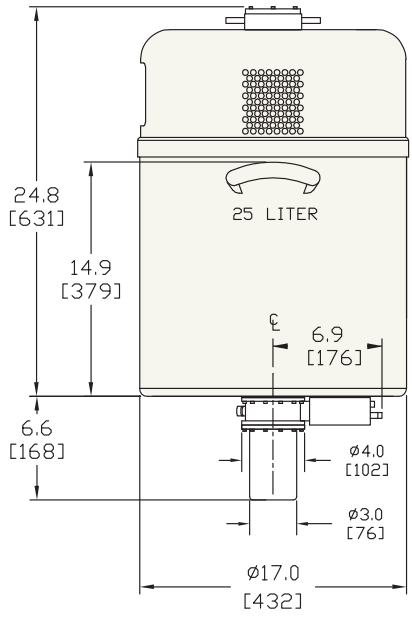

Side View

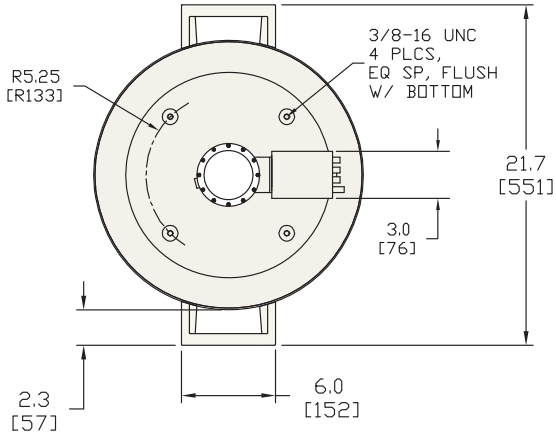

Bottom View

Cryo-Cycle II Vertical Integral Slimline Style (CCII-VI-SL)

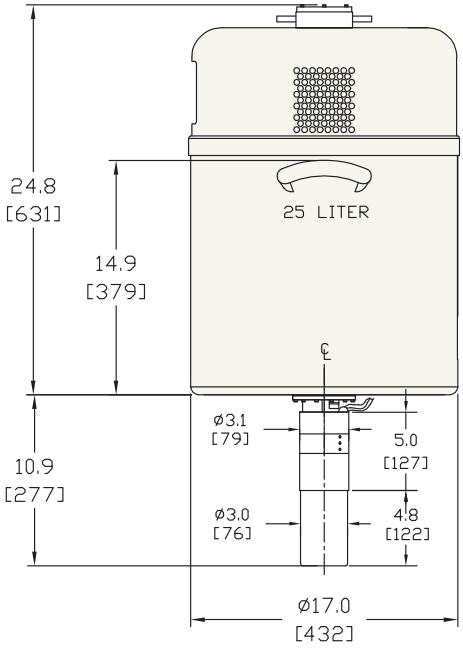

Side View

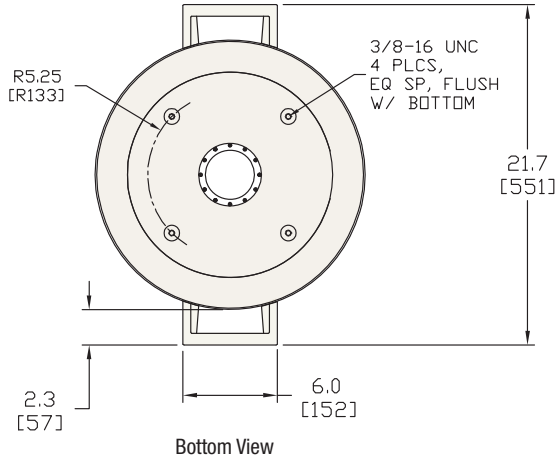

Bottom View

Cryo-Cycle is a trademark of Canberra Industries, Inc.

Windows is a registered trademark of Microsoft Corporation in the United States and/or other countries.

©2015 Canberra Industries, Inc. All rights reserved.

CANBERRA

Cryo-Pulse® 5 plus Electrically Refrigerated Cryostat

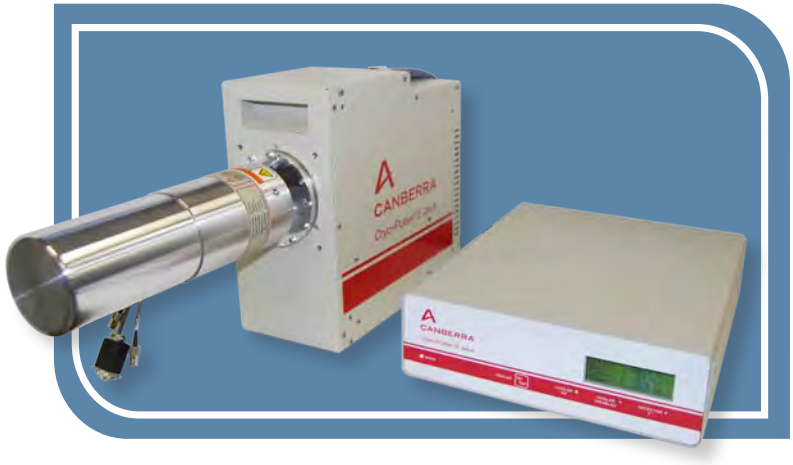

Features

- Completely LN_2 free
- Non-CFC/non-flammable refrigerant
- Long service life (>100 000 hours)
- No maintenance required
- Low power demand
- Low vibration/low noise
- Compact and lightweight
- No compromise on detector specifications
- Remote read-out
- Pulse-tube technology
- 2-year full warranty + pro-rated warranty on the coldhead

Benefits

- Safety
- Low operating cost
- High availability
- Expanded field of applications
- Quiet

Description

The Cryo-Pulse® 5 Plus is an electrically powered cryostat for use with HPGe radiation detectors. It utilizes a pulse tube cooler, a highly reliable technology originally used in military and space applications and which has proven its value for germanium detectors in the original Cryo-Pulse 5. Like its predecessor, the Cryo-Pulse 5 Plus still consists of a coldhead-assembly, to which the detector is attached, and an external power controller. The basic external design and interface of the coldhead have been preserved to maximize interchangeability between the previous and the new version. However the coldhead internals and the controller have been completely redesigned and new features have been added to further improve the performance and reliability and to answer our customers' requirements even better.

Key Improvements

Active and passive vibration reduction:

- Expanded range of HPGe detector models now available with electric cooling.
- Reduced audible noise.

Improved heat sinking, allowing operation up to 40 °C ambient temperature.

Graphical User Interface for remote control and status monitoring.

Integrated HV-inhibit circuit.

A pulse-tube cooler contains CFC free, non-flammable gas and is hermetically sealed, so no gas-refill is required. The compressor contains no oil or lubricant, so no contamination of the refrigerant occurs and no periodic filter exchange is required. This makes the Cryo Pulse 5 Plus completely **maintenance free**.

Cryo-Pulse 5 plus Electrically Refrigerated Cryostat

The cooler is integrated in a compact coldhead-assembly which is directly attached to the detector housing. The unit can operate in all orientations. The coldhead-assembly is connected to a bench-top power controller that produces the necessary output voltage to drive the compressor. The controller contains an auto ranging power supply at 100-240 V and 50 or 60 Hz. In addition to the relay output, the new controller is also equipped with a **RS-232 serial interface** to connect to a PC. A dedicated GUI allows remote control and status monitoring. Two BNC-connectors are foreseen on the rear panel to combine the inhibit signal of the preamplifier and the controller for enhanced detector protection. The Cryo-Pulse 5 Plus **controllers are backwards compatible** with the previous Cryo-Pulse 5 model coldheads.

A pulse tube cooler operates with a pressure wave instead of a piston, virtually eliminating wear and vibrations. This means pulse tube coolers are extremely reliable and have a very long **service life of over 100 000 hours** or 11 years of operation. This life time estimation is documented in a paper that can be found under 'Detectors' in the Technical Literature section of the CANBERRA web site.

Although the compressor already produces very low vibration levels, all efforts are done to reduce these even more. Apart from shock mounts to isolate the compressor from the rest of the cooler and the detector housing, the Cryo-Pulse 5 Plus is equipped with an active vibration reduction system. An accelerometer inside the coldhead measures the vibrations generated by the compressor and feeds this signal back to the controller. The controller then adjusts the drive signal to the cooler so that vibrations are minimized. The system is even self-tuning such that it adapts to possible changes of the system's vibration characteristics over time. It is currently the best available technology in the field and allows CANBERRA to offer the broadest range of detector models available with **electric cooling** and continue to provide high-quality detector solutions with **no compromise on performance**.

Our confidence in the Cryo-Pulse 5 Plus is demonstrated by the **two year full warranty** on the complete system (detector included) and **additional pro-rated warranty on the coldhead**. If the coldhead fails after the second year, it will be repaired or replaced at 40, 60 or 80% of the list price in year three to five respectively.

Specifications

COLD HEAD (Excluding detector chamber)

- DIMENSIONS – 145 x 287 x 313 mm (5.7 x 11.3 x 12.3 in.) (W x H x D).
- WEIGHT – 17 kg (37.5 lb) approx.

POWER CONTROLLER

- DIMENSIONS – 280 x 88 x 315 mm (11 x 3.5 x 12.4 in.) (W x H x D).
- WEIGHT – 5.3 kg (11.6 lb).
- POWER CONTROLLER CABLE LENGTH – 3 m (10 ft).

OPTION

- Model CP5-C-25 – Controller Cable 7.5 m (24.5 ft).

POWER REQUIREMENTS

- 100–240 V ac, 50–60 Hz, 250 watts max. (auto ranging power supply).
- FUSE – 2x T3.15 A 250 V.

CONNECTORS

- 2X BNC-F – HV-inhibit.
- RS-232 – Remote control and status read-out (USB/RS-232 adapter provided).
- DB15-F – Relay output – cooler status and warm/cold indication.

COOLING

- Forced air (internal fans).

OPERATING TEMPERATURE

- +5 to +40 °C (41 to 104 °F) on standard models and configurations.

AVAILABLE DETECTOR MODELS AND OPTIONS

- Cryo-Pulse 5 Plus can be ordered with all standard GC-, GX-, GR-, BE-, GL-, GUL-detector models (see applicable detector specification sheets for details).
- The RDC-option is only available on the Flanged version.

PERFORMANCE

- CANBERRA guarantees detector performance as, warranted by detector model with cooler in operation.

ORDERING INFORMATION

Model	Description
CP5-PLUS-SL	Slimline Cryo-Pulse 5 plus
CP5-PLUS-F	Flanged Cryo-Pulse 5 plus

ISO 9001 SYSTEM CERTIFIED

Cryo-Pulse 5 plus Electrically Refrigerated Cryostat

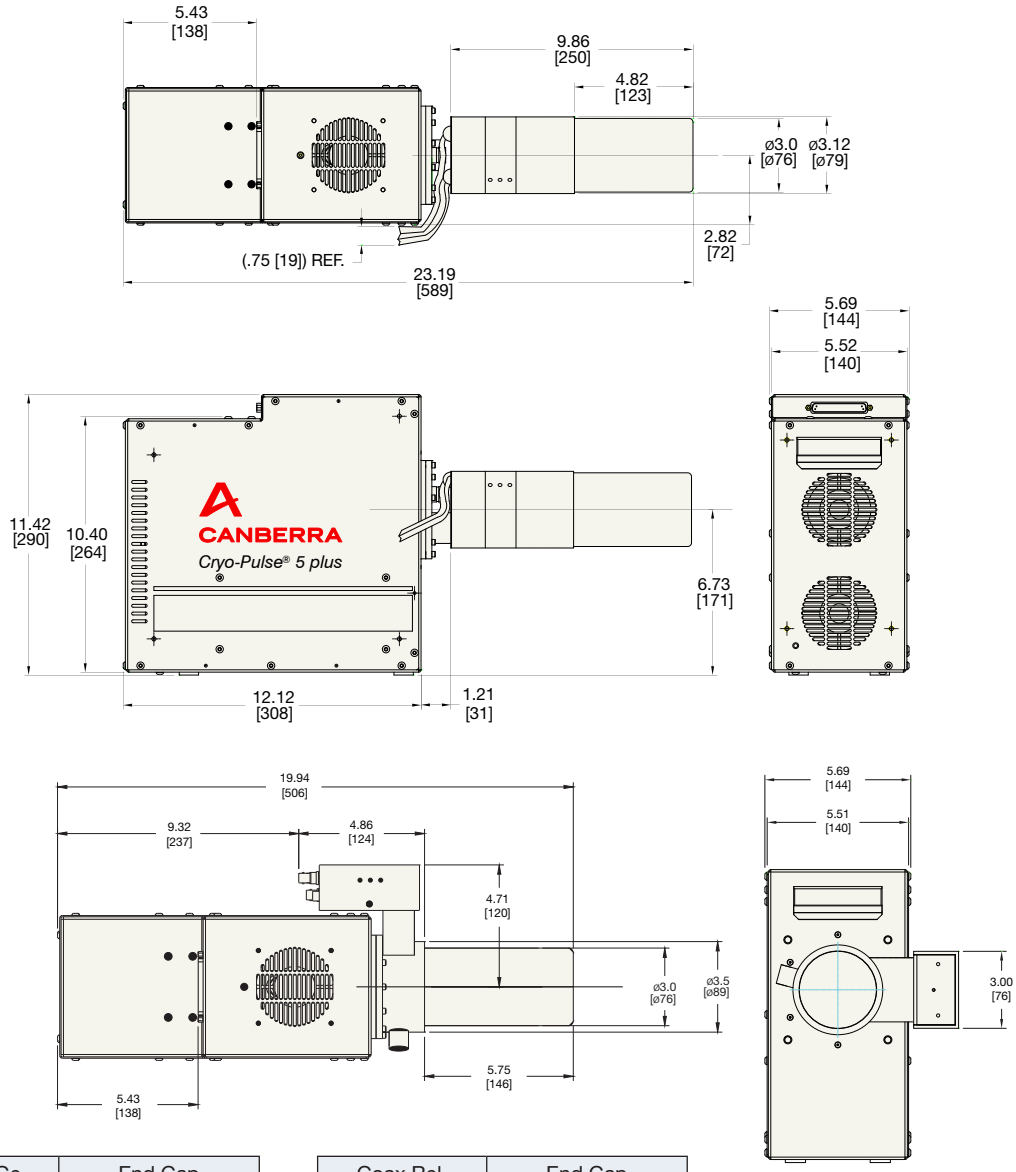

LEGe/BEGe, Nom. Area (mm^2)	End Cap Diameter, mm [in.]
=<2000	76 [3.0]
2800	83 [3.25]
3800	89 [3.50]
5000	102 [4.0]
6500	114 [4.50]

Coax Rel. Efficiency (%)	End Cap Diameter, mm [in.]
=<40	76 [3.0]
40-50	83 [3.25]
50-70	89 [3.50]
70-100	95 [3.75]
100-120	102 [4.0]
120-150	108 [4.25]
150	114 [4.50]

End cap dimensions depend on detector size. The tables above show the typical surface area or efficiency range vs. end cap diameter. End cap lengths are also greater for larger detectors. Consult the factory if end cap size is critical in your application.

Cryo-Pulse is a registered trademark of Canberra Industries, Inc.

©2012 Canberra Industries, Inc. All rights reserved.

Slimline Cryostats

CANBERRA Slimline cryostats are designed so that the detector and electronics both fit in a cylindrical housing without any protruding flanges, valves, and preamplifier enclosures.

This compact configuration facilitates integration into shields and systems. Maintenance or exchange of the preamplifier is also very simple as it is located underneath the cylindrical cover, outside of the cryostat vacuum.

Vertical Slimline Dipstick cryostats can be fitted with a Remote-Detector Chamber (RDC). This RDC option separates the detector chamber from the Dewar and preamplifier and allows the use of a backshield so the lead shield completely surrounds the detector element.

Additionally the offset between the centerline of the RDC element and the cryostat coldfinger removes any direct "line-of-sight" between the detector chamber and the molecular sieves.

This design significantly reduces the radiation background on the detector. Standard lengths for the RDC option are 2, 4, 6, 8 and 10 inches. Custom lengths are available upon request.

End cap dimensions depend on detector size. The chart below shows the typical efficiency range vs. end-cap diameter. End cap lengths are also greater for larger detectors. Consult the factory if end-cap size is critical in your application.

Rel. Efficiency (%)	Diameter in. (mm)
≤40	3.0 (76)
40-50	3.25 (83)
50-70	3.50 (89)
70-100	3.75 (95)
≥100	4.0 (102)

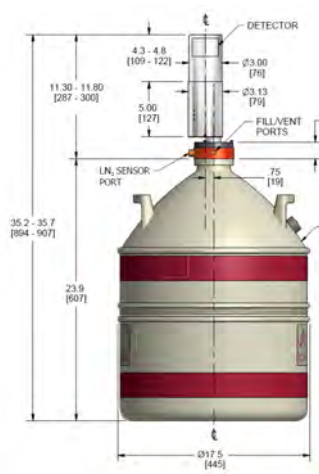

7500SL Vertical Dipstick in D-30 Dewar

7500SL Vertical Dipstick in CCII-VD Hybrid Cryostat

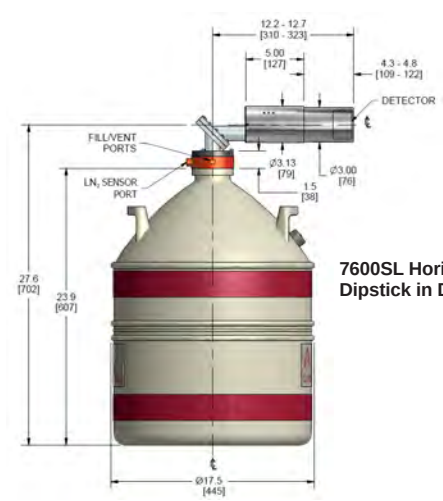

7600SL Horizontal Dipstick in D-30 Dewar

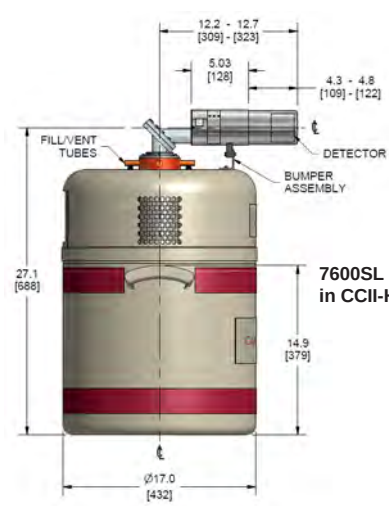

7600SL Horizontal Dipstick in CCII-HD Hybrid Cryostat

Slimline Cryostats

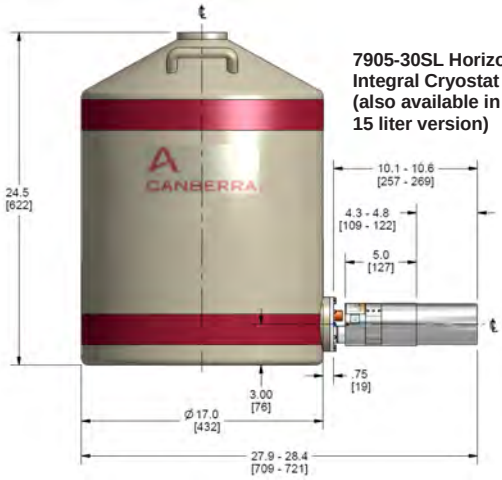

7905-30SL Horizontal Integral Cryostat (also available in 7.5 and 15 liter version)

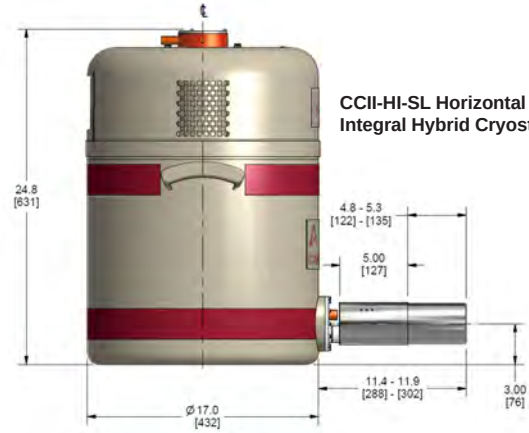

CCII-HI-SL Horizontal Integral Hybrid Cryostat

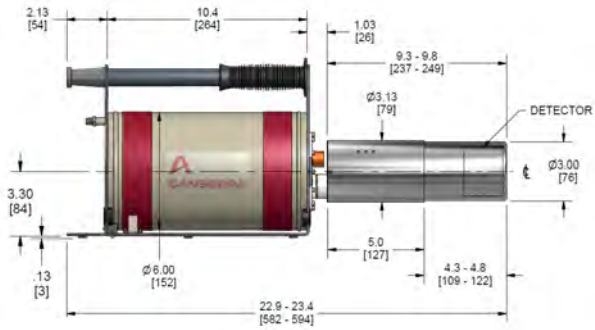

7935-2SL Portable Multi-Attitude Cryostat (2 liter MAC)

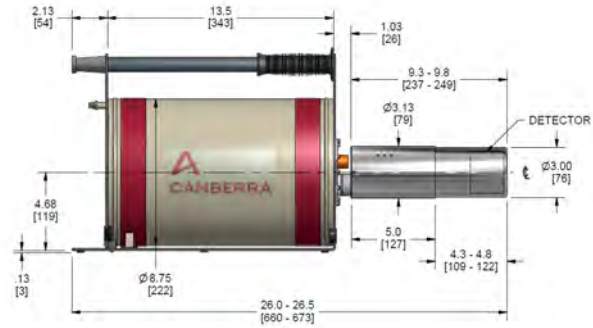

7935-7SL Portable Multi-Attitude Cryostat (7 liter Big MAC)

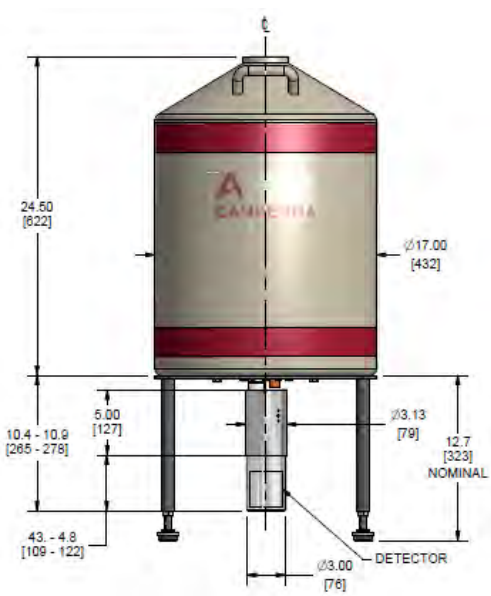

7906-30SL Vertical Integral Cryostat (also available in 7.5 and 15 liter version)

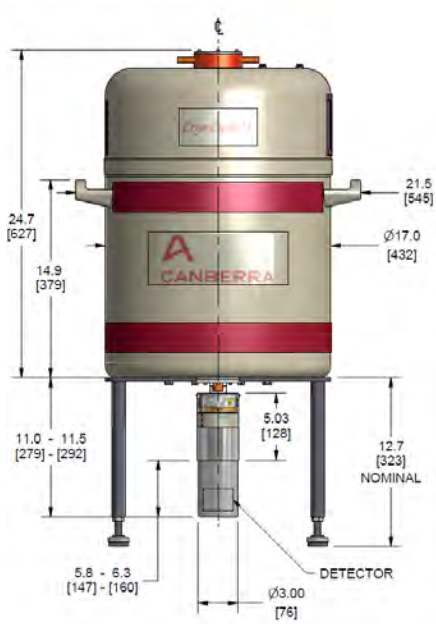

CCII-VI-SL Vertical Integral Hybrid Cryostat

Slimline Cryostats

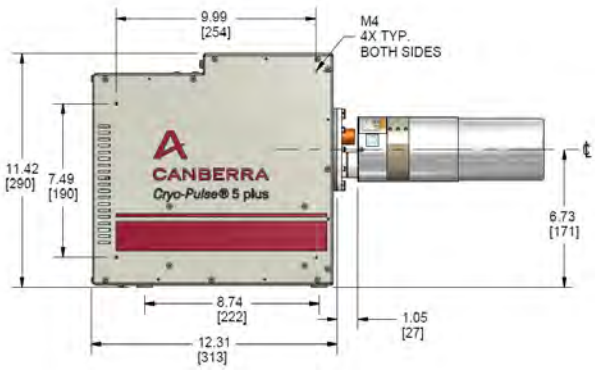

CP5-PLUS-SL Electrically-Cooled Cryostat

RDC option

Model 7500SL Dipstick cryostats can be fitted with an RDC option. Standard lengths for RDC elements are 2, 4, 6, 8 and 10 inches. The outline drawings below show examples of a 4 inch and 6 inch version as these are the most commonly used sizes. The RDC-4 is compatible with our model 747 and 767 lead shields. The RDC-6 goes with our model 777 lead shield.

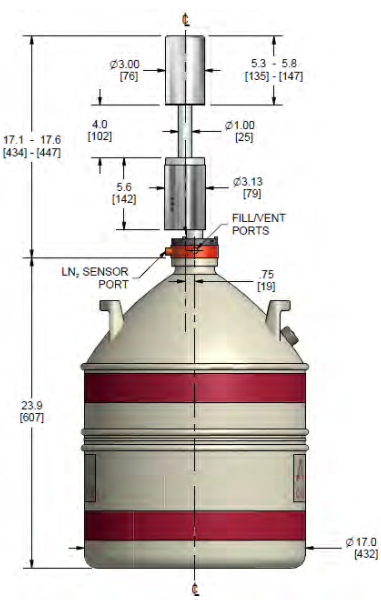

7500SL-RDC-4 Vertical Dipstick in D-30 Dewar

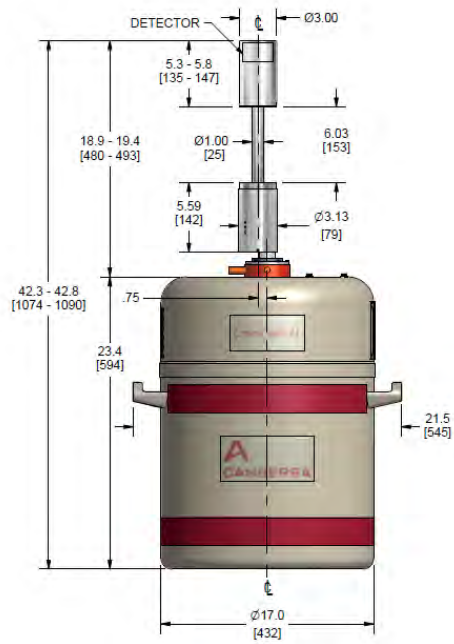

7500SL-RDC-6 Vertical Dipstick Cryostat in CCII-VD Hybrid Cryostat

©2014 Canberra Industries, Inc. All rights reserved.

Flanged Cryostats

The liquid nitrogen cryostat is the most important and least appreciated component in assuring reliable long term performance of a germanium detector system. CANBERRA manufactures its own cryostats to exacting quality standards to ensure long detector life.

There are two basic types of cryostats in use: the dipstick, in which the detector occupies a vacuum chamber having a dipstick-like tail which is inserted into the neck tube of a Dewar, and the integral, in which the detector chamber and Dewar share a common vacuum.

The standard configuration comes with a radial O-ring seal. A metal face seal is available as an option on detectors with a 3.0 in. (76 mm) diameter endcaps only. Metal seals are more rugged and, in general, provide a longer life time of the detector vacuum.

Flanged cryostats can be fitted with a Remote-Detector Chamber (RDC). This RDC option separates the detector chamber from the Dewar and preamplifier and allows the use of a backshield so lead shielding that completely surrounds the detector element can be installed.

This significantly reduces the radiation background on the detector. Standard lengths for the RDC option are 2, 4, 6, 8 and 10 inches. Custom lengths are available on request.

End cap dimensions depend on detector size. The chart below shows the typical efficiency range vs. end-cap diameter. End cap lengths are also greater for larger detectors. Consult the factory if end-cap size is critical in your application.

Rel. Efficiency (%)	Diameter in. (mm)
≤40	3.0 (76)
40-50	3.25 (83)
50-70	3.50 (89)
70-100	3.75 (95)
≥100	4.0 (102)

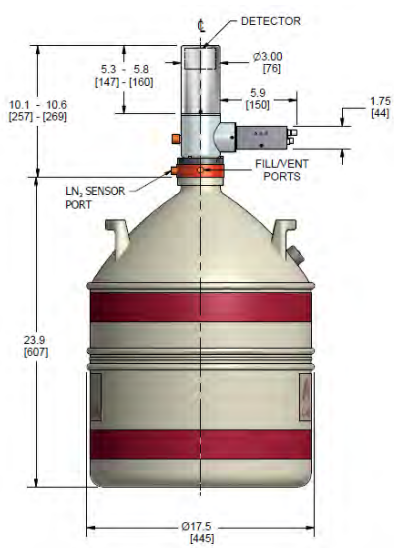

7500 Vertical Dipstick in D-30 Dewar

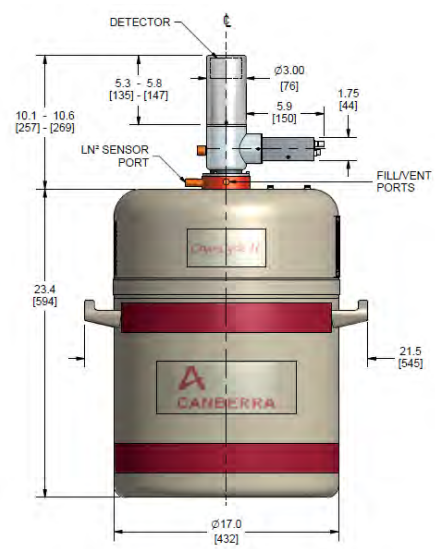

7500 Vertical Dipstick in CCII-VD Hybrid Cryostat

Flanged Cryostats

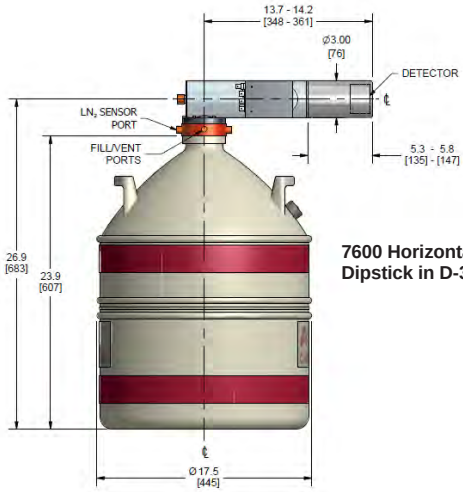

7600 Horizontal Dipstick in D-30 Dewar

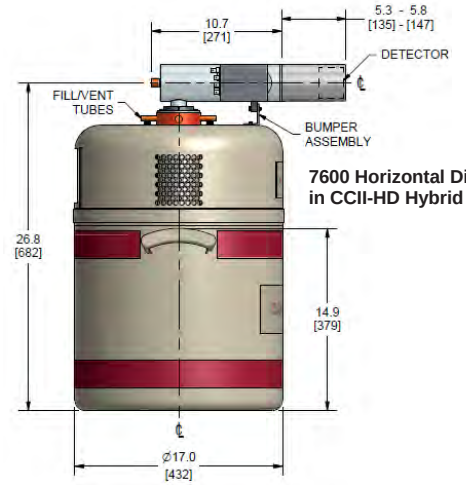

7600 Horizontal Dipstick in CCII-HD Hybrid Cryostat

7905-30 Horizontal Integral Cryostat (also available in 7.5 and 15 liter version)

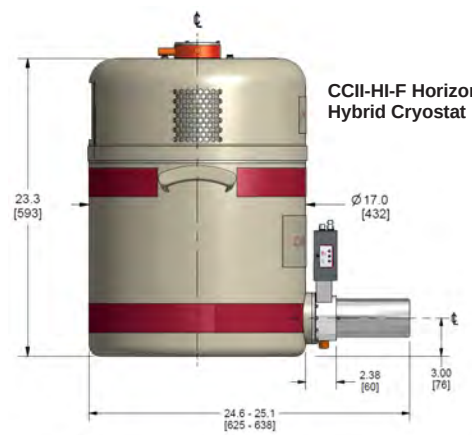

CCII-HI-F Horizontal Integral Hybrid Cryostat

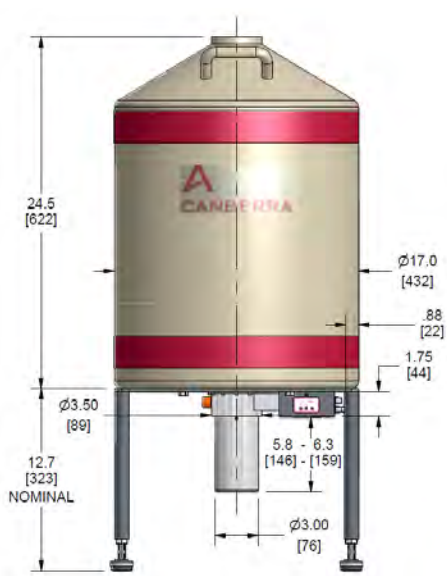

7906-30 Vertical Integral Cryostat (also available in 7.5 and 15 liter version)

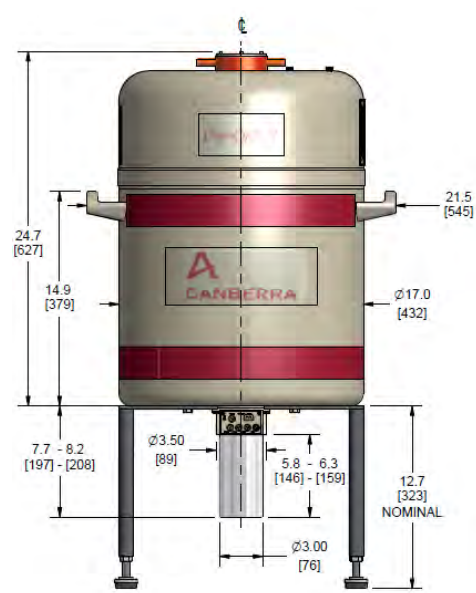

CCII-VI-F Vertical Integral Hybrid Cryostat

Flanged Cryostats

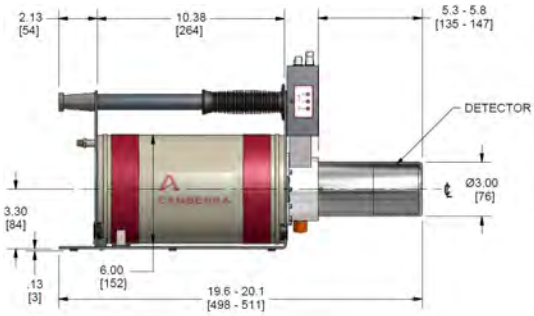

7935-2F Portable Multi-Attitude Cryostat (2 liter MAC)

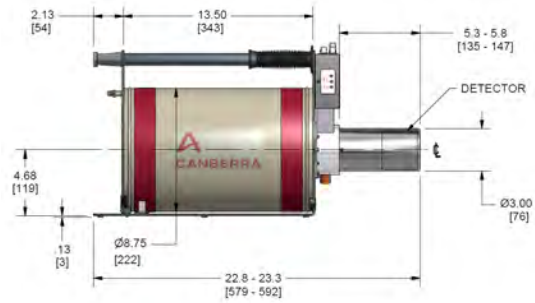

7935-7F Portable Multi-Attitude Cryostat (7 liter Big MAC)

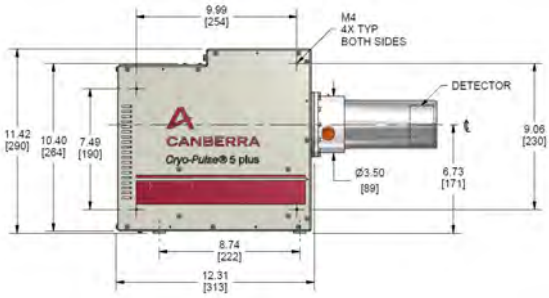

CP5-PLUS-F Electrically-Cooled Cryostat (side view)

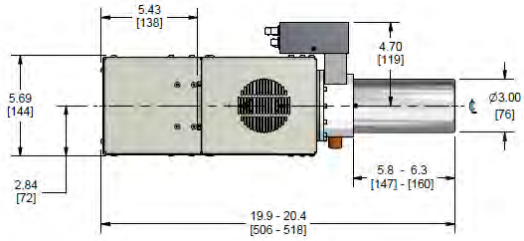

CP5-PLUS-F Electrically-Cooled Cryostat (top view – preamplifier can be oriented in other directions upon request)

Metal Seal Flanged Cryostats

(available on 3 in. (76 mm) diameter endcaps only)

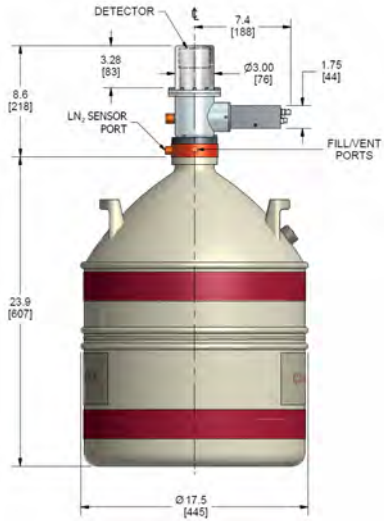

7500M Vertical Dipstick (Available in D-30 Dewar or CCII-VD Hybrid Cryostat)

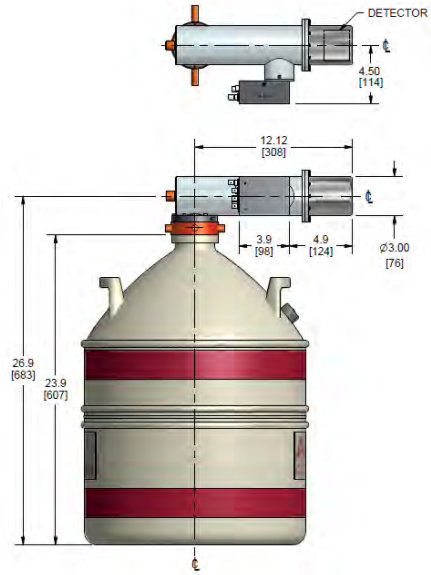

7600M Horizontal Dipstick (Available in D-30 Dewar or CCII-HD Hybrid Cryostat)

Flanged Cryostats

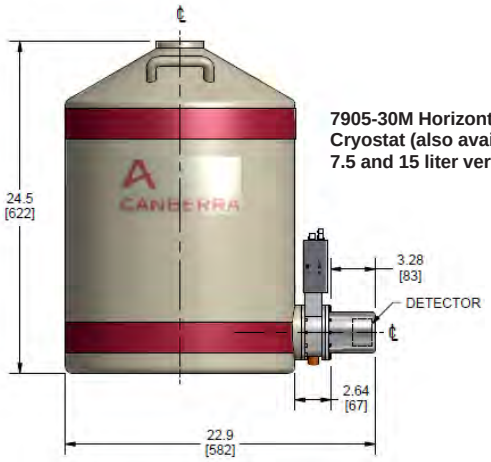

7905-30M Horizontal Integral Cryostat (also available in 7.5 and 15 liter version)

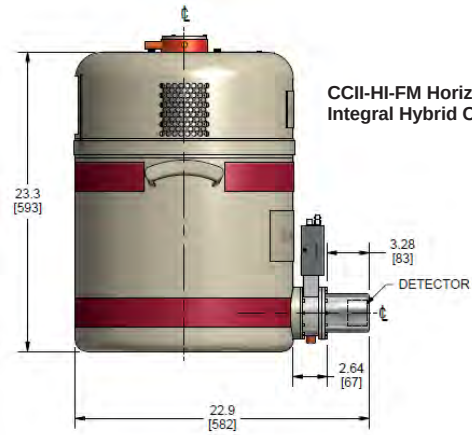

CCII-HI-FM Horizontal Integral Hybrid Cryostat

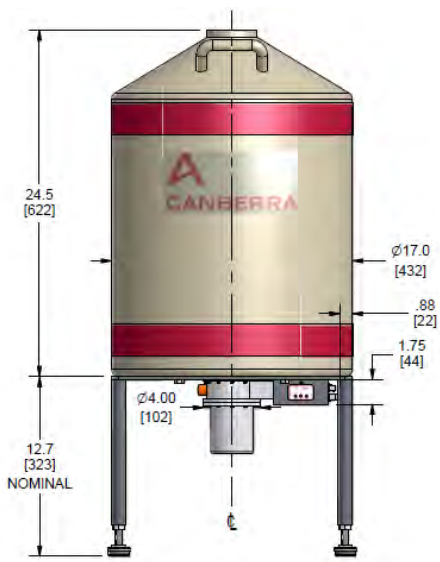

7906-30M Vertical Integral Cryostat (also available in 7.5 and 15 liter version)

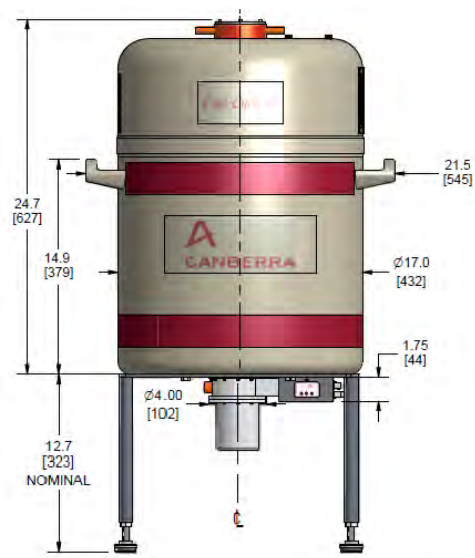

CCII-VI-FM Vertical Integral Hybrid Cryostat

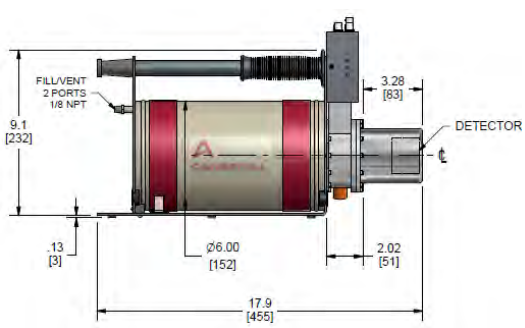

7935-2FM Portable Multi-Attitude Cryostat (2 liter MAC)

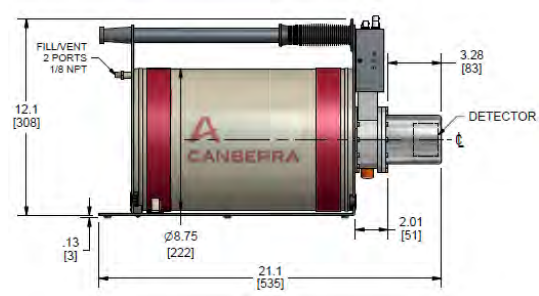

7935-7FM Portable Multi-Attitude Cryostat (7 liter Big MAC)

Flanged Cryostats

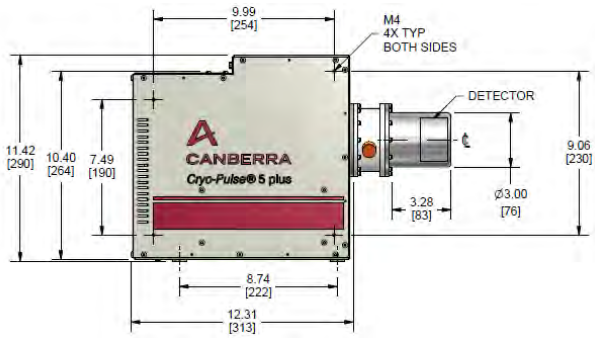

CP5-PLUS-FM Electrically-Cooled Cryostat

RDC option

All flanged cryostat models (with exception of the vertical integral downlooking Cryo-Cycle™ II, model CCII-VI) can be fitted with an RDC option. Standard lengths for RDC elements are 2, 4, 6, 8 and 10 inches. Below are a few examples of LN_2 or electrically cooled cryostat models including the RDC option. The flanged Big MAC and Cryo-Pulse® 5 Plus with RDC-4 are commonly used in *in situ* counting (ISOCS™) systems.

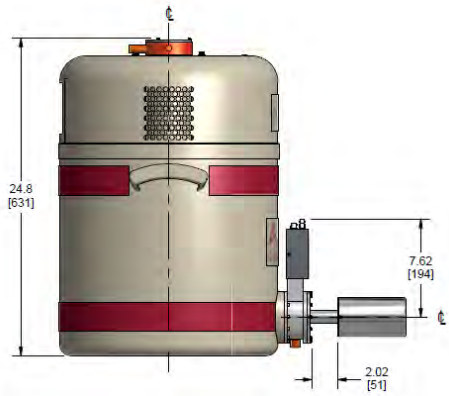

CCII-HI-F-RDC-2 Horizontal Integral Hybrid Cryostat

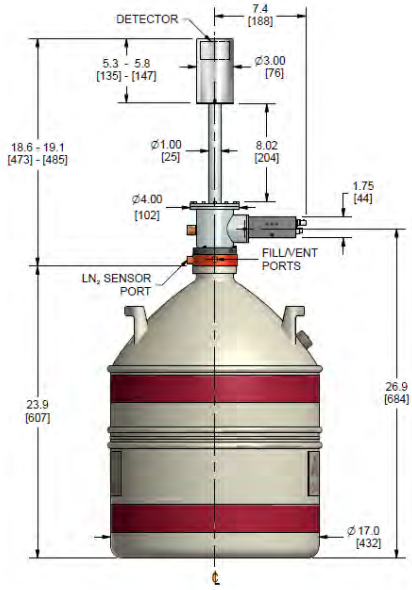

7500-RDC-8 Vertical Dipstick Cryostat in D-30 Dewar

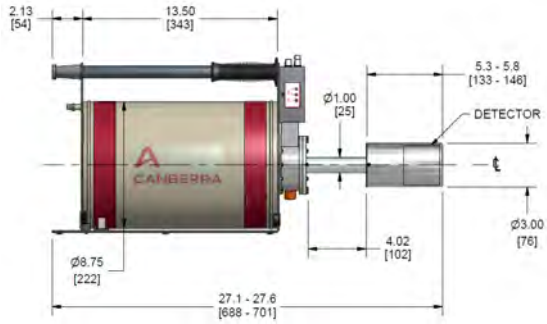

7935-7F-RDC-4 Portable Multi-Attitude Cryostat (7 liter Big MAC)

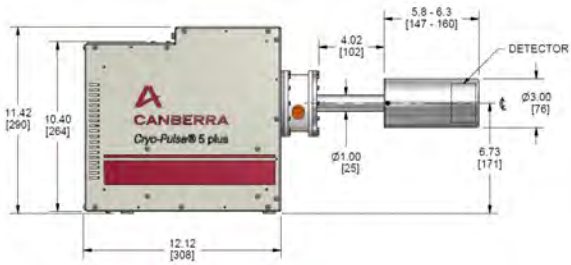

CP5-PLUS-F-RDC-4 Electrically-Cooled Cryostat

Cryo-Cycle and ISOCS are trademarks of Canberra Industries, Inc.
Cryo-Pulse is a registered trademark of Canberra Industries, Inc.

©2014 Canberra Industries, Inc. All rights reserved.

CANBERRA

Portable Cryostats
MAC-Two Day
Big MAC-Five Day

Features

- Operation in any orientation
- Light weight aluminum construction
- Slimline detector/preamplifier configuration
- Long holding time
- Warm-up sensor-bias disable

Description

For applications requiring both portability and flexibility of use, the MAC (multi-attitude cryostat) is the answer. The unique fill and vent system employed by the MAC allows operation of the detector in any orientation without LN_2 spillage even when the Dewar is full. The small size, light weight, and ruggedness of the unit permit use of the unit in field conditions. The slimline detector chamber allows the unit to be shielded very effectively for use in low level counting applications.

The MAC detector consists of a Dewar having two fill and vent ports arranged so that one of the ports is the vent, regardless of the Dewar's orientation. This allows the Dewar to be operated in the horizontal position, vertically uplooking, or vertically downlooking, without loss of LN_2.

A single port version of the MAC and Big MAC is available on special order. This version has half the capacity and holding time of the standard product. A gravity-feed supply Dewar/stand is available for the single port cryostat. The single port cryostat is compatible with other brands, and it holds LN_2 in all orientations which may be important in some applications, e.g. for use in a submarine (see CANBERRA Model 7411).

The detector/preamp includes a sensor which provides a signal when the LN_2 is depleted. This output can be used to shut down the bias supply, to operate an alarm, or both.

The standard MAC features CANBERRA's slimline cryostat option in which a CANBERRA preamplifier is packaged behind the detector chamber within the confines of the 80 mm diameter snout. The slimline cryostat allows the detector to be installed in a shield with very little difficulty and with efficient use of shielding material. The snout is long enough to reach through 10-15 cm of shielding material and still accommodate Marinelli beaker samples.

A flanged version of the MAC is also available. This version makes use of a conventional box style preamplifier having bulkhead connectors (rather than pigtail connectors) and is somewhat more compact than the slimline version.

The MAC comes with detachable carrying handle assembly. With the carrying handle assembly removed, there are no obstructions beyond the outer diameter of the Dewar, and the unit can be readily installed in other scientific apparatus such as whole-body counters, scattering chambers or low-level counting systems.

Portable Cryostats MAC-Two Day Big MAC-Five Day

Both manual and automatic refill systems are available for use with the MAC. Since the MAC has separate fill and vent ports, the LN_2 supply and the vent lines can be made gas tight, thus avoiding the hazards of cold N_2 or LN_2 to either personnel or adjacent equipment.

The MAC is available as an option with most of the High Purity Germanium detectors offered by CANBERRA. Consult the CANBERRA Catalog for information on the wide variety of detectors that are available from CANBERRA.

Specifications

MAC

- WEIGHT – 5.1 kg (11.2 lb) empty; 7.1 kg (15.6 lb) full.
- LN_2 CAPACITY – 2.5 liters.
- HOLDING TIME – 2 days (typical detector size).
- COOL DOWN TIME – 2 hours, typically.
- FILL AND VENT PORTS – 3.2 mm (1/8 in.) NPT.

BIG MAC

- WEIGHT – 7.9 kg (17.5 lb) empty; 13.6 kg (30 lb) full.
- LN_2 CAPACITY – 7.0 liters.
- HOLDING TIME – 5 days (typical detector size).
- COOL DOWN TIME – 2 hours, typically.
- FILL AND VENT PORTS – 3.2 mm (1/8 in.) NPT.

OPTIONS

- Model 7415 Detector Lift Mechanism (for CANBERRA shields).

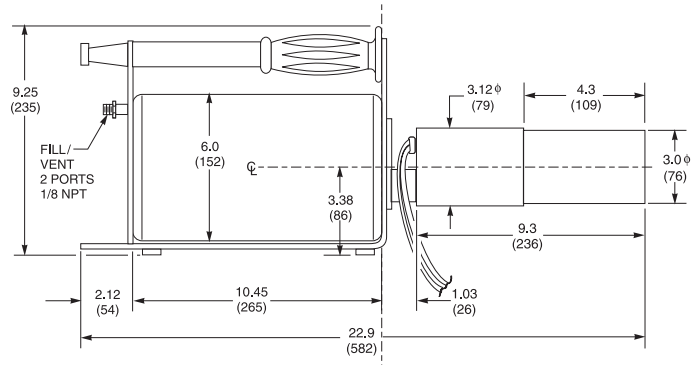

Model 7935SL-2 (Slimline Model)
Model 7935-2F (Flanged Model)*

End cap dimensions depend on detector size. The chart (below right) shows the typical efficiency range vs. end-cap diameter. End cap lengths are also greater for larger detectors. Consult the factory if end-cap size is critical in your application.

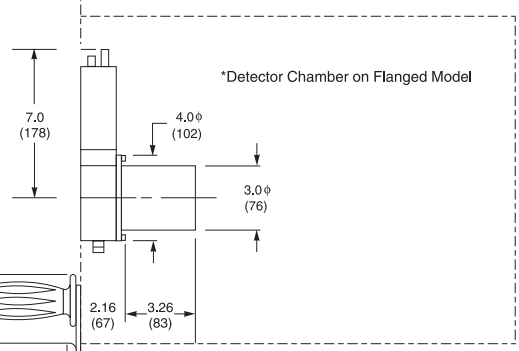

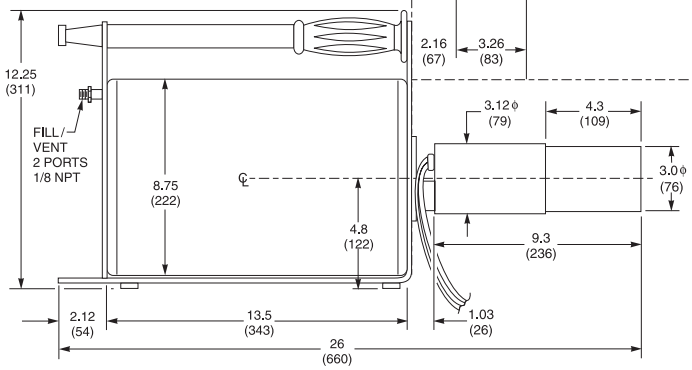

Rel. Efficiency (%)	Diameter in. (mm)
≤40	3.0 (76)
40-50	3.25 (83)
50-70	3.50 (89)
70-100	3.75 (95)
≥100	4.0 (102)

Model 7935SL-7 (Slimline Model)
Model 7935-7F (Flanged Model)*

©2003 Canberra Industries, Inc. All rights reserved.

ISO 9001 SYSTEM CERTIFIED

Retractable Cryostats

Features

- Variable geometry
- Windowless operation
- UHV compatible
- Rugged and reliable
- Use with Si(Li) or Ge detectors

Description

These retractable cryostats from Canberra are used with Si(Li), LEGe, and Ultra-LEGe detectors in x-ray applications. Retractable cryostats provide a means of moving the detector element in relation to the sample with both under vacuum. They also make it possible to operate the detector in windowless mode, i.e. without a window (absorber) between the detector element and the sample.

As with any detector that is not permanently sealed, care must be exercised in using windowless detectors to avoid contamination of the detector element. The vacuum chamber to which the detector is attached must be clean and dry and under good vacuum before the gate valve is opened. Under no circumstances is the detector to be exposed to atmosphere while it is cold. Damage to detectors caused by contamination is not covered under warranty.

The following standard models are available:

Model	Description
7905-R	Retractable unit with conventional window and sliding O-ring seal.
7905-WR	Windowless retractable unit with sliding O-ring seal.
7905-BWR	Windowless retractable unit with metal bellows seal.

The 7905-R provides variable geometry and vacuum chamber operation only. This cryostat comes with a conventional window. Refer to the relevant detector spec sheet for window options.

The 7905-WR provides variable geometry as well as windowless operation. An integral gate valve allows the detector to be retracted and sealed while the sample chamber is serviced. When the sample chamber is re-evacuated, the gate valve is reopened to admit the detector.

The 7905-BWR is similar to the 7905-WR. Instead of a sliding Oring seal, however, it has a flexible metal bellows which extends to provide detector movement. This version is preferred for UHV applications as outgassing properties are more favorable than that of a sliding O-ring seal. Of course, the Dewar and internal cryostat hardware are a source of outgassing in windowless systems but the cryogenic absorber used in the Dewar is fairly effective at pumping into the 10^{-4} – 10^{-5} Torr (133 – 13.3 kPa) pressure range and users report using such detectors successfully in vacuum systems operating at 10^{-8} Torr (13 x 10^{-5} Pa) or lower pressures.

Retractable Cryostats

Both the 7905-WR and 7905-BWR cryostats are factory equipped with a removable 1 mil Be window. This allows the user to check out the detector before exposing it to a foreign atmosphere. Once the detector is checked out and found to be operating properly, the window assembly can be removed. At this time the user becomes responsible for the welfare of the detector. The window assembly may be left in place indefinitely should the application not require windowless operation. These models are also equipped with a seal-off valve and detachable valve operator. This valve is located in a mini-conflat flange near the gate valve. It provides a means of pumping the space occupied by the gate valve and bellows or sliding seal when the beryllium window is in place and for evacuating the entire cryostat assembly when the beryllium window is removed.

Detectors operating in windowless mode can pick up water vapor and other condensable contaminants from the user's vacuum system. Water vapor will freeze on the detector assembly, building up an ice layer which attenuates low energy photons. It isn't good for the detector element either. The 7905-WR and the 7905-BWR are equipped with an internal heater and temperature sensor which allow the user to warm up the detector assembly and evaporate the ice without emptying the cryostat. The heater has a resistance of 1325 ohms and accepts up to 10 watts of power at 115 V ac. The temperature sensor is a 100 ohm platinum resistance temperature detector (PRTD). Care must be exercised in using this feature to avoid overheating the detector assembly. Depending on conditions, deicing can be done in as little as four hours or so.

Some variations on the standard designs shown on the next page are practical while others are not. For example, it is practical to increase or decrease the stroke, to substitute a 15 liter Dewar, or to change the vacuum flange (conflat 2 3/4 in. is shown). It is not, however, practical to install a detector of greater than 80 mm^2 (Si(Li)) or 100 mm^2 (LEGe or Ultra LEGe) active area. Consult the factory for price and availability of any modifications you require.

Other (than 1 mil) removable vacuum windows and removable contamination shields are available. The former make it possible to convert a windowless detector to windowed for applications not requiring extremely low energy response. The latter is a ultrathin window (not vacuum tight) which reduces the potential for contamination between the detector and the user's vacuum chamber.

Consult the factory for more information on these options.

Retractable Cryostats

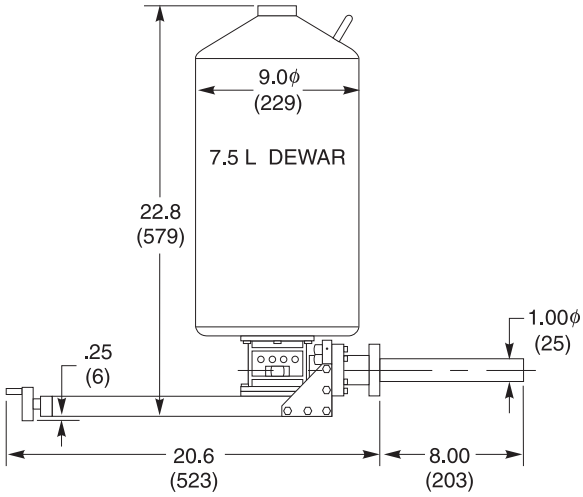

Model 7905-R

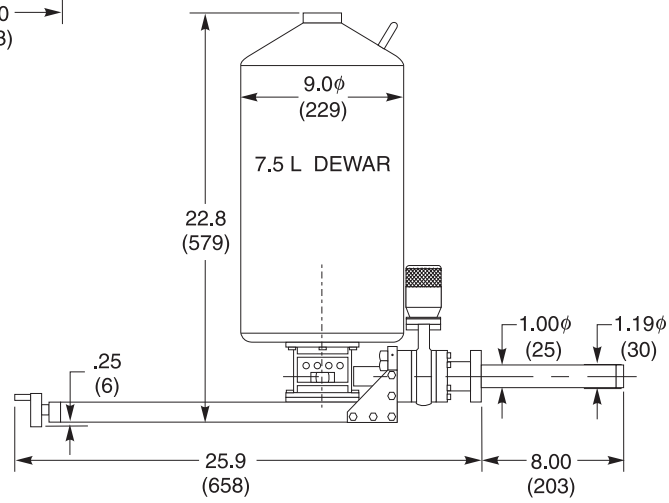

Model 7905-WR

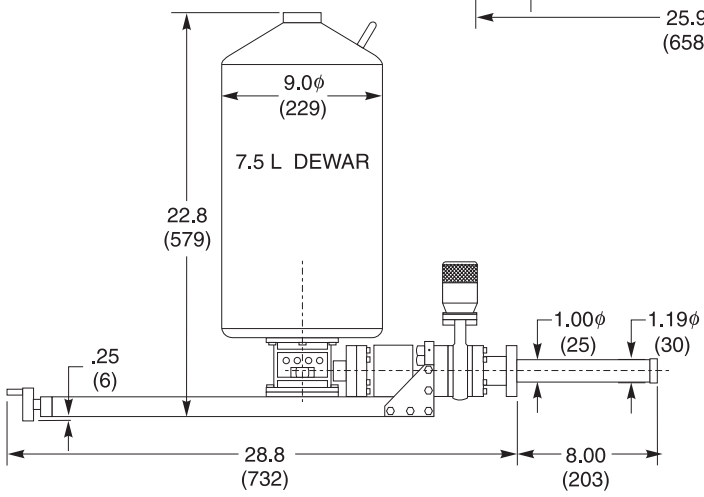

Model 7905-BWR

©2009 Canberra Industries, Inc. All rights reserved.

CANBERRA

Model 7185/7186 LN_2 Gauge/Controller

Features

Models 7185 and 7186

- Digital level display
- High and low alarm setpoints
- Audible and visible alarm
- Alarm relay
- Sensor tailored to cryostat

Model 7186 Only

- High and low control setpoints
- Controlled ac output
- Solenoid valve with captive 3 m (10 ft) cord
- Hoses for fill and vent

Description

The Model 7185 LN_2 Level Gauge provides a digital display of LN_2 level in a Dewar or container along with adjustable low and high level setpoints which initiate audible and visible alarm signals as well as a relay output for remote monitoring. The display shows liquid level from 0-100% of the active sensor length. It can be programmed to read out in inches or centimeters. Sensors are designed, sized, and configured for CANBERRA dipstick and integral cryostats. For portable cryostats refer to the Model 2541 Controller. Consult the factory for applications involving non-CANBERRA cryostats.

The Model 7186 provides the same functions as the 7185. In addition it has adjustable low and high level control setpoints and a relay which provides line voltage to a controlled ac output for operation of a solenoid valve. The control and alarm setpoints are readily adjustable by means of front panel controls. Setpoints are stored in non-volatile memory. This ac outlet is powered from the time the low setpoint is reached until either 1.) the high setpoint is reached or 2.) the user-programmed time-out is reached. The 7186 includes a cryogenic solenoid valve as well as fill and vent hoses. LN_2 supply containers are available from CANBERRA for a complete automatic LN_2 Fill System.

Both models operate on line voltage of 100, 115, 200, or 240 V ac, 50 or 60 Hz, internally selected. This line voltage is provided on the controlled ac outlet.

The 7186 Controller requires a source of LN_2 at a pressure of 34 to 172 kPa gauge (5 to 25 psig). CANBERRA D-160 and D-240 containers or their equivalents are highly recommended. A self-pressurizing withdrawal device (NTD-30/50) with a 30 or 50 liter Dewar can be used but it is not highly recommended because of marginal capacity and pressure for most applications. The liquid quality must be good at the point of consumption. This means there must be no ice in the liquid and that the supply line must not be lossy (causing excess vaporization).

An overflow container may be required if there is no safe place for the discharge of overflow gas and liquid. **WARNING:** Malfunctions can result in the entire contents of supply containers being dumped through the system. CANBERRA takes no responsibility for such accidents. The user is responsible for the installation and for the safety measures that are needed in this application.

Model 7185/7186 LN2 Gauge/Controller

ORDERING INFORMATION

- Specify model number.
- Specify cryostat type and capacity (model number).
- Specify line voltage.
- See LN_2 accessories for options.

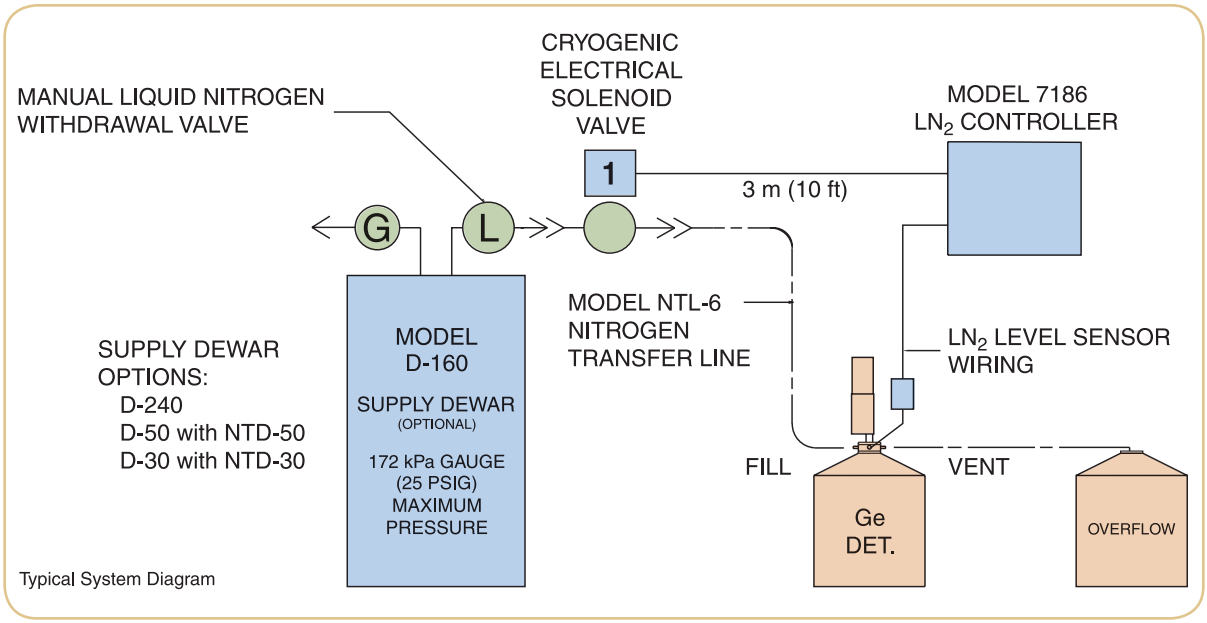

Typical System Diagram

ISO 9001 SYSTEM CERTIFIED

©2002 Canberra Industries, Inc. All rights reserved.

CANBERRA

Model 1786A Detector LN_2 Monitor

Features

- Automatic protection against accidental detector warmup
- Delayed shutdown saves experiments
- Audible, visual and contact closure outputs

Description

The Model 1786A Detector LN_2 Monitor protects LN_2-cooled detector systems against accidental warmup by monitoring liquid level in the Dewar and providing audible and visual warning of low liquid levels. It provides a signal for remote shutdown of Detector Bias Supply which has an Inhibit input. This single-width NIM module is suitable for most dipstick and integral type cryostats, but is not suitable for portable cryostats.

When your LN_2 sensor detects a problem, the LN_2 Monitor has provisions for turning off high voltage when an alarm condition occurs to protect detectors and electronics from damage. Shut-down does not occur until at least 20 minutes after the condition is sensed, and well before total depletion of the liquid nitrogen, so ongoing experiments can continue without interruption.

The Model 1786A must be manually reset following a power interruption. This will prevent HV Bias from coming on automatically (and abruptly) when the power is restored.

Specifications

INPUTS

- LN_2 DET. – Rear panel BNC connector accepts input signal from the LN_2 sensor.

OUTPUTS

- H.V. CONTROL – Rear panel contact closure output is grounded during alarm conditions; open circuit during normal conditions.

INDICATORS

- H.V. OFF – Front panel indicator lamp lights when the controlled circuit and H.V. CONTROL outputs are disabled.
- BUZZER – Internal buzzer gives audible warning of an alarm condition.
- LIGHT – Front panel LN_2 indicator light gives visual warning of alarm condition.

CONTROLS

- ACTIVATE-SETUP – Front panel toggle switch disables high voltage to allow alarm circuits to be set and checked without damage to associated electronics.
- LN_2 – Front panel lighted pushbutton switch; pressing it clears the alarm once alarm situation is corrected.

ACCESSORIES

- LN_2 SENSOR KIT – Includes a flexible sensor assembly, a BNC connector, and instructions for installing the sensor in standard CANBERRA cryostats. The kit will be installed by CANBERRA if the 1786A is ordered with a detector, a cryostat collar (CC-30), or a Dewar neck plug assembly.

CONNECTORS

- LN_2 DET. and H.V. CONTROL – Rear panel BNC, UG-1094/U.

POWER REQUIREMENTS

+24 V dc – 40 mA	+12 V dc – 185 mA
–24 V dc – 0 mA	–12 V dc – 5 mA

PHYSICAL

- SIZE – Standard single-width NIM module 3.43 x 22.12 cm (1.35 x 8.71 in.) per DOE/ER-0457T.
- NET WEIGHT – 1.2 kg (2.7 lb).
- SHIPPING WEIGHT – 1.9 kg (4.2 lb).

ISO 9001 SYSTEM CERTIFIED

CANBERRA

LN_2 Accessories

Model D-2 LN_2 Fill Device

- Self-pressurizing device for filling portable cryostats
- Uses non-pressurized LN_2
- Capacity − 2 liters
- Two charges fill MAC, 5-6 charges fill Big MAC

Model D-30; D-50 LN_2 Storage Dewar

- LN_2 capacity (liters) – 30/50
- Diameter – 43 cm (17 in.)
- Height – 61.5/89.4 cm (24.2/35.2 in.)
- Loss rate (liters per day) – 0.5/0.6
- Shipping weight 11.8 kg (26 lb)

Model D-160 LN_2 Storage Tank

- 160 liter capacity
- 152 kPa (gage) (22 psig) relief pressure
- 1.5% per day loss rate
- Diameter – 51 cm (20 in.), height – 1.47 m (58 in.) (no casters)
- Shipping weight 100 kg (220 lb) empty

Model NTL-6 Nitrogen Transfer Line

- Insulated latex transfer line
- 3/8 in. ID x 1/8 in. wall x 6 ft long

Model D-30/OS Offset Neck Dewar

- Provides horizontal offset to detector chambers
- Neck to be offset by 12.7 cm (5 in.)
- Replaces D-30 Dewar in dipstick cryostats

Model NTD-30; NTD-50 LN_2 Withdrawal Device

- NTD-30 for use with D-30
- NTD-50 for use with D-50
- Pressure gauge
- 34.5 kPa (gage) (5 psig) relief valve
- Manual LN_2 valve
- Shipping weight 2.7 kg (6 lb)

Model D-240 LN_2 Storage Tank

- 240 liter capacity
- 152 kPa (gage) (22 psig) relief pressure
- 1.0% per day loss rate
- Diameter – 66 cm (26 in.), height – 1.63 m (64 in.) (with casters)
- Shipping weight 122 kg (270 lb), empty

Model RB-1 Roller Base for D-30 or D-50

- Adjustable
- Stable four-wheel design

ISO 9001 SYSTEM CERTIFIED

Low Background Detector Systems

INTRODUCTION

The term "low background" is used fairly indiscriminately in describing gamma analysis systems. The one common denominator for such systems is some form of shielding, but beyond this, anything goes. To bring some order to our own product line and to help customers distinguish the classes of systems, CANBERRA has chosen to categorize low-background gamma analysis systems as follows:

LOW-BACKGROUND

Ge detectors in a variety of cryostat types with lead shielding of 2-4 inch (5-10 cm) thickness. The only cryostats specifically excluded from this class are modular (convertible) types in which the molecular sieve adsorber is necessarily located near the detector element.

ULTRA LOW-BACKGROUND

Ge detectors in cryostats that are A: designed for shielding effectiveness and B: constructed from materials that are notably low in background. The complementary lead shields are also made from select, low-background materials and are at least 4-6 inches (10-15 cm) thick. CANBERRA uses the term Ultra Low-Background to describe standardized detectors and shields which are described in the following pages. These standard products offer performance normally associated with much more expensive custom systems.

SPECIALTY ULTRA LOW-BACKGROUND

Systems in this class are designed for the specific application at hand. This type of system usually involves user specified design and/or performance criteria and close collaboration between the user and CANBERRA throughout the project – from inception to installation.

It is this class of system where active shielding (cosmic guards or Compton suppression) is often used. CANBERRA has a wealth of experience in building such systems and we welcome your inquiries should standard Low Background or Ultra Low-Background systems not satisfy your needs.

Ask for our Application Note entitled Ultra Low-Background Detector Systems for more information.

TYPICAL RESULTS

The following 50 000 second background spectra were taken with detectors having 100% relative efficiency. Spectrum A was taken without shielding. Spectrum B was taken with the detector in a standard cryostat (7500SL) operating in a standard 4 in. thick Lead Shield (747). Spectrum C was taken with the detector in an Ultra Low-Background Cryostat (7915-30 ULB) operating in a 15 cm (6 in.) thick ULB (Model 777) Lead Shield.

Comparative Background Counts are given below:

	Without Shield	Standard Cryostat and Shield	ULB Cryostat and Shield
Total Counts/Sec (50-3000 keV)	142.3	3.35	1.84
Peaks Found	78	31	13

Of the thirteen peaks found in the spectrum from the ULB system only one, the 2.614 MeV peak from ^{208}Tl is a normal background line. All the rest are attributed to cosmic ray interaction in the shield and detector.

A listing of these peaks and their means of production is given below:

Energy (keV)	Isotope/Origin	Remarks
53.4	^{73m}Ge	^{72}Ge (n,γ)
66.7	^{73m}Ge	^{72}Ge (n,γ) (sum 13.3 & 53.4 keV)
139.7	^{75m}Ge	^{74}Ge (n,γ)
198.4	^{71m}Ge	^{70}Ge (n,γ) (sum 174.9 & 23.4 keV
511	Positron ann.	Doppler broadened
569.7	^{207}Pb (n,n')	Originating from stable Pb in shield
595.8	^{74}Ge (n,n')	Broad assymetric, due to recoil summation
669.6	^{63}Cu (n,n')	
691.0	^{72}Ge (n,n')	Broad assymetric, due to recoil summation
803.1	^{206}Pb (n,n')	Originating from stable Pb in shield
834.0	^{72}Ge (n,n')	Broad assymetric, due to recoil summation
962.1	^{63}Cu (n,n')	
2614.5	^{208}Tl	Intensity about 0.1% of that of unshielded detector-believed to be shield penetration

Note: The fast and thermalised neutrons are of cosmic origin.

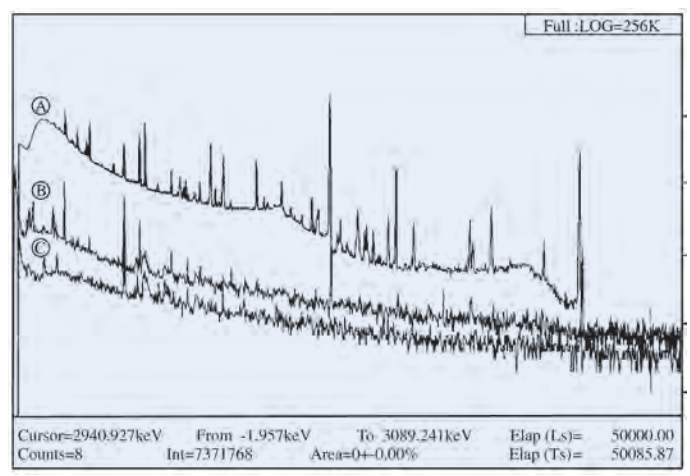

ISO 9001 SYSTEM CERTIFIED

CANBERRA

Features

- Low background materials
- No-stream-path design
- Offset preamplifier and adsorber
- Standardized hardware
- Uncompromised reliability

Ultra Low-Background Cryostats (ULB)

Description

CANBERRA has years of experience in building custom low-background detectors for low level gamma spectroscopy. The most important features of these custom detectors have been incorporated into standardized cryostat designs which can be produced quickly and economically and which produce predictable results. There are two basic Ultra Low-Background cryostat designs available, a vertical dipstick and a U-style integral. Both have the following design and construction features in common:

1. Low background materials are used for detector chamber, holder, and internal hardware.
2. Design offsets are used to allow the use of shielding materials between the detector element and hotter materials such as the preamplifier and adsorber (molecular sieves).
3. Direct streaming paths for external (to shield) sources of radiation are eliminated.
4. Materials having high cross-section for cosmic neutrons are avoided in construction.
5. Designs do not compromise ease of use or long-term reliability.

Among the select materials used in CANBERRA ULB cryostats are the following:

- Aluminum – 99.999% pure with guaranteed thorium and uranium less than 1 ppb.
- Copper – 99.99% pure (better than standard OFHC grade).
- Stainless Steel – selected low ^{60}Co content.
- Composite Carbon – Virtually zero background substitute for Be in low energy and wide range detectors.

A thorough discussion of low background detectors and systems can be found in CANBERRA's "Ultra Low-Background Detector Systems" Application Note. Ordering information is given below:

Model List for Ultra Low-Background Cryostat Option:		
Cryostat Type	**Dipstick**	**U-Style Integral**
Cryostat Model	7500SL	7915-30
Remote Detector Chamber	RDC-X*	N.A.
*X = 2, 4, or 6 for 2 inch, 4 inch or 6 inch neck.		

Ultra Low-Background Cryostats

Material (Choose one of the following):	
Detector Type	**Hardware Option**
Standard Electrode Coax	ULB-GC
Reverse Electrode Coax	ULB-GR
Extended Range Coax	ULB-GX
Low Energy	ULB-GL
Well Detector	ULB-GW
Broad Energy	ULB-GB

End cap dimensions depend on detector size. The chart below shows the typical efficiency range vs. end-cap diameter. End cap lengths are also greater for larger detectors. Consult the factory if end-cap size is critical in your application.

Rel. Efficiency (%)	Diameter in. (mm)
≤40	3.0 (76)
40-50	3.25 (83)
50-70	3.50 (89)
70-100	3.75 (95)
≥100	4.0 (102)

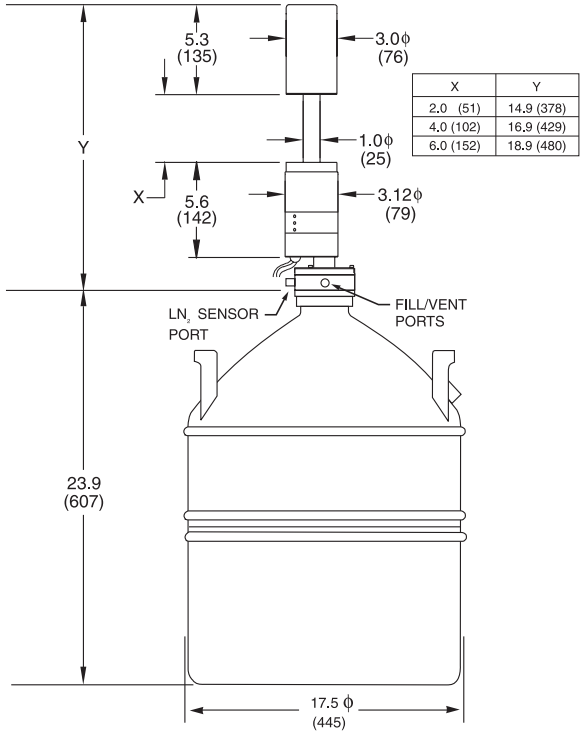

X	Y
2.0 (51)	14.9 (378)
4.0 (102)	16.9 (429)
6.0 (152)	18.9 (480)

Base Model 7500 SL

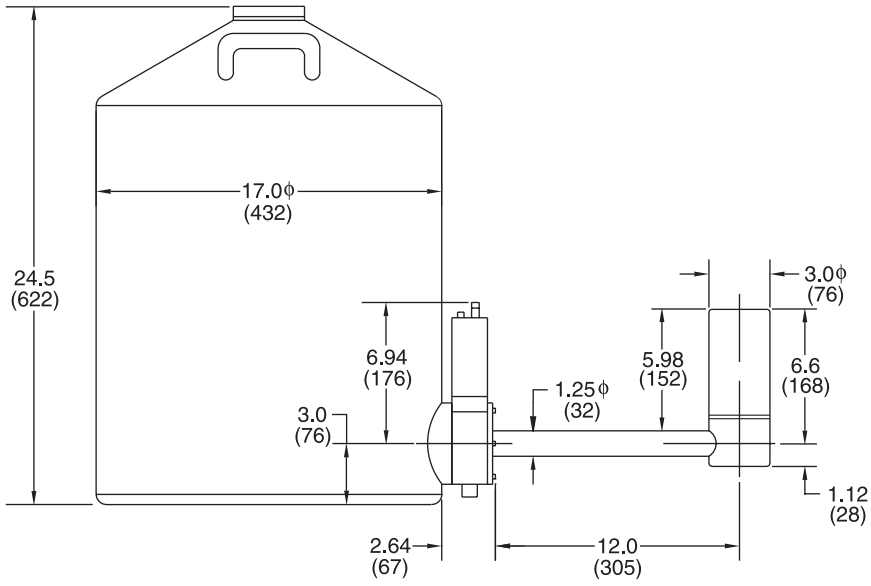

Base Model 7915-30

©2008 Canberra Industries, Inc. All rights reserved.

U-Style Cryostats

CANBERRA U-Style cryostats have a vertically-oriented detector chamber located at the end of a horizontal arm extending from the side of the Dewar or cooler.

This configuration excludes the preamplifier and other hardware from the inner cavity of the lead shield and eliminates all line-of-sight streaming paths to the detector element. These features contribute significantly to the overall background reduction of the counting system.

The U-Style configuration has a lower center of gravity for the detector and shield as compared to a standard vertical configuration which may make it attractive for mobile applications as in trailer- or ISO container-based counting facilities. Additionally the U-style configuration allows installing the detector in systems where there is no room under the shield to place the Dewar or cooler.

The standard length of the horizontal arm is 12 in. (305 mm) measured from the flange of the preamplifier service body to the detector center line. This length makes the U-style cryostat compatible with both 4 in. (102 mm) and 6 in. (152 mm) thick CANBERRA lead shields.

The standard configuration comes with a radial O-ring seal. A metal face seal is available as an option on detectors with a 3.0 in. (76 mm) diameter endcaps only. Metal seals are more rugged and, in general, provide a longer life time of the detector vacuum.

End cap dimensions depend on detector size. The chart below shows the typical efficiency range vs. end-cap diameter. End cap lengths are also greater for larger detectors. Consult the factory if end-cap size is critical in your application.

Rel. Efficiency (%)	Diameter in. (mm)
≤40	3.0 (76)
40-50	3.25 (83)
50-70	3.50 (89)
70-100	3.75 (95)
≥100	4.0 (102)

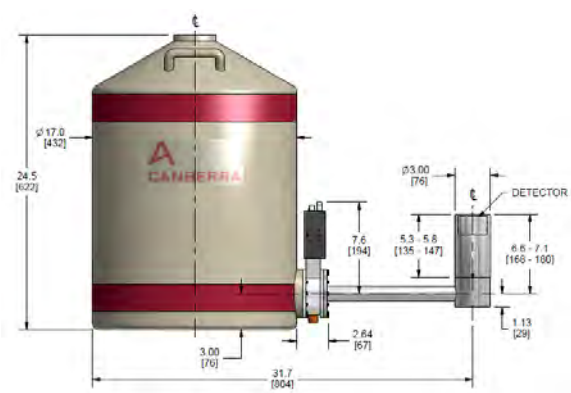

7905-30U Horizontal Integral Cryostat (also available in 7.5 and 15 liter version)

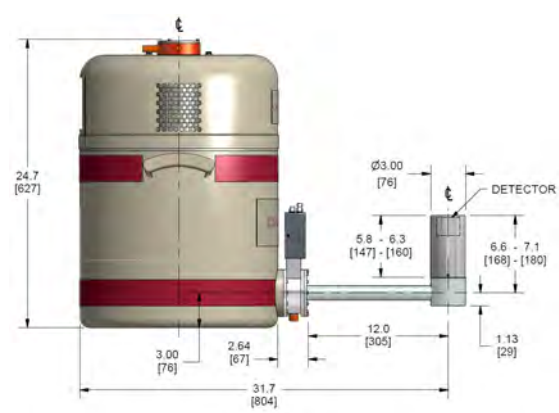

CCII-HI-U Horizontal Integral Hybrid Cryostat

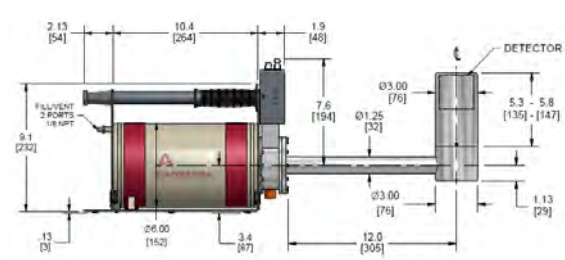

7935-2U Portable Multi-Attitude Cryostat (2 liter MAC)

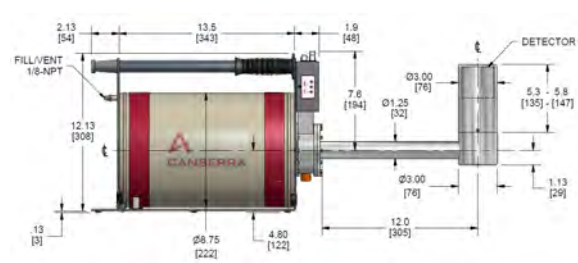

7935-7U Portable Multi-Attitude Cryostat (7 liter Big MAC)

U-Style Cryostats

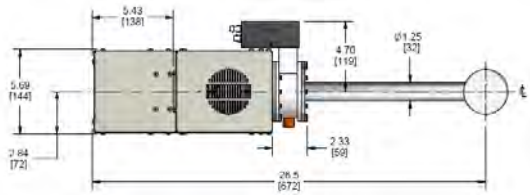

CP5-PLUS-U Electrically-Cooled Cryostat (top view – preamplifier can be oriented in other directions upon request)

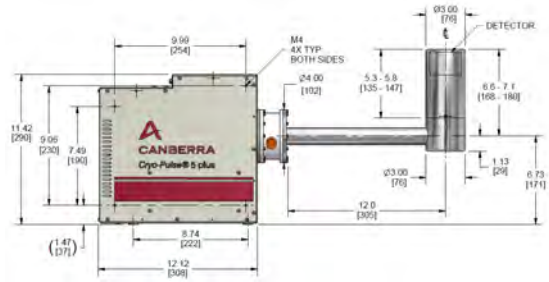

CP5-PLUS-U Electrically-Cooled Cryostat (side view)

Metal Seal U-Style Cryostats

(available on 3 in. (76 mm) diameter endcaps only)

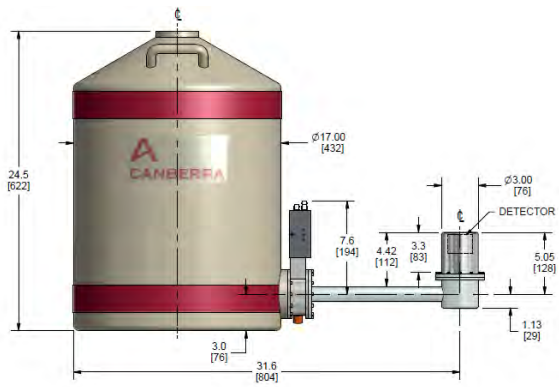

7905-30UM Horizontal Integral Cryostat (also available in 7.5 and 15 liter version)

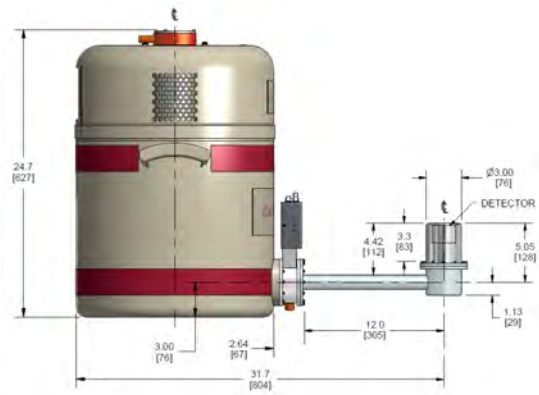

CCII-HI-UM Horizontal Integral Hybrid Cryostat

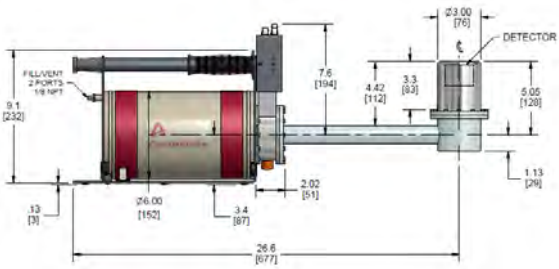

7935-2UM Portable Multi-Attitude Cryostat (2 liter MAC)

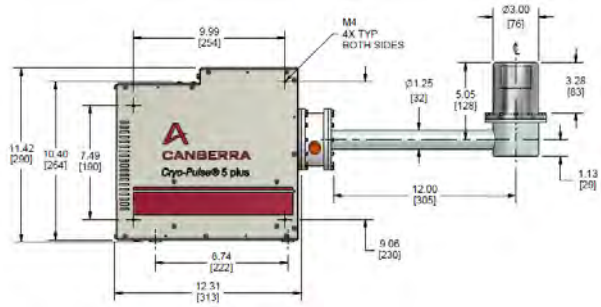

CP5-PLUS-UM Electrically-Cooled Cryostat (side view)

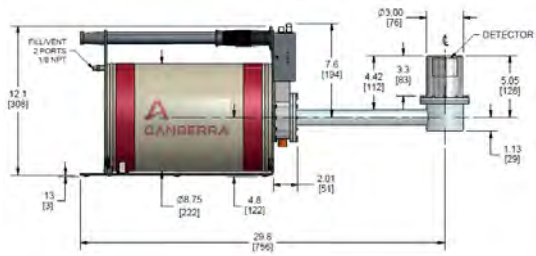

7935-7UM Portable Multi-Attitude Cryostat (7 liter Big MAC)

©2014 Canberra Industries, Inc. All rights reserved.

SIMPLIFYING

Thermal Conductivity (*k*)

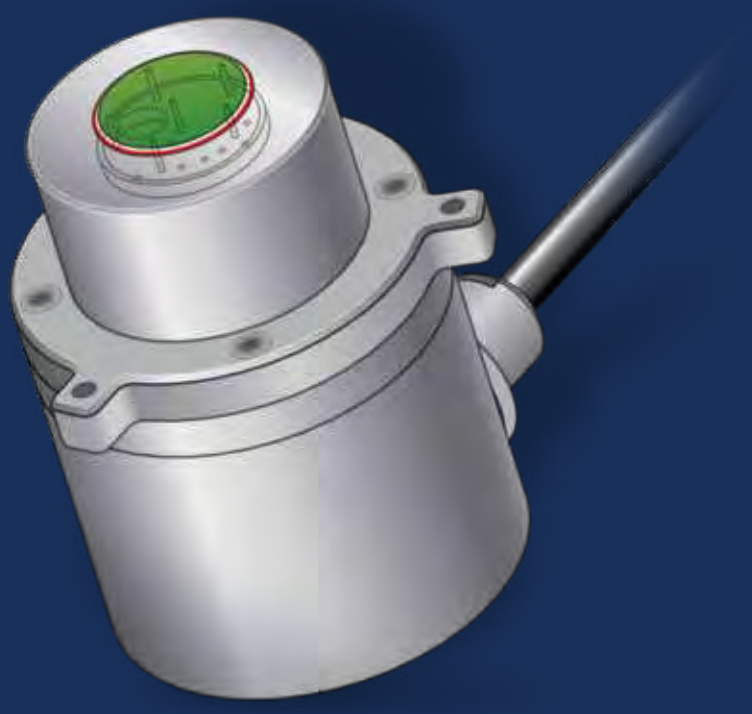

FAST, ACCURATE TESTING
0 to 500 W/mK in seconds

WIDE TEMPERATURE RANGE
-50˚ to 200˚C

NO SAMPLE PREPARATION
Unlimited sample size

NON-DESTRUCTIVE
Leaves sample intact

EASY-TO-USE
No user-calibration required

HIGHLY VERSATILE
Tests solids, liquids, powders and pastes

MODULAR
Configurable to meet a range of needs and budget
Option to pair with new dilatometer

C-THERM TCi™
Thermal Conductivity Analyzer

ALSO PROVIDES: EFFUSIVITY | DIFFUSIVITY | HEAT CAPACITY | DENSITY

SIMPLIFYING

THERMAL CONDUCTIVITY

The latest generation of C-Therm's patented technology expands the capabilities of this rapid, non-destructive thermal conductivity and effusivity testing instrument to a whole new level. Designed to provide simple, highly accurate thermal characterization for lab, quality control and production environments, the C-Therm TCi Thermal Conductivity Analyzer requires no user-calibration or sample preparation. The system has broad testing capabilities (0 to 500W/mK) across a wide range of temperatures (-50ºC to 200ºC).

The TCi can be equipped with one or two sensors for increased capacity, and provides accurate thermal analysis of solids, liquids, powders and pastes in less time than any other instrument - less than 5 seconds! And because the procedure is non-destructive, samples remain intact, undisturbed and reusable after testing. The sensors offer users exceptional versatility in being able to operate in various environments, including thermal chambers, high pressure vessels and glove boxes.

Principles of Operation

The C-Therm TCi is based on the Modified Transient Plane Source (MTPS) technique. It employs a one-sided, interfacial heat reflectance sensor that applies a momentary constant heat source to the sample. Thermal conductivity and effusivity are measured directly, providing a detailed overview of the thermal characteristics of the sample.

How It Works

A known current is applied to the sensor's spiral heating element, providing a small amount of heat. This results in a rise in temperature at the interface between sensor and sample, which induces a change in the voltage drop of the sensor element. The rate of increase in the sensor voltage is used to determine the thermo-physical properties of the sample. The thermo-physical properties are inversely proportional to the rate of increase in the sensor voltage. The voltage rise will be steeper for more thermally insulative materials (foam). Results are displayed on the system's software in real-time.

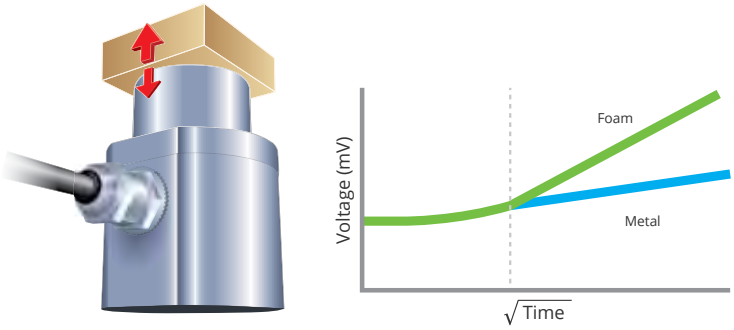

The TCi is factory-calibrated for directly measuring both thermal conductivity (k) & thermal effusivity:

$$k \quad \& \quad \text{Effusivity} = \sqrt{k\rho c_p}$$

Where:

k = thermal conductivity (W/m • K)

ρ = density (kg/m³)

c_p = heat capacity (J/kg • K)

VERSATILE

EASILY TEST SOLIDS, LIQUIDS, POWDERS AND PASTES

APPLICATIONS

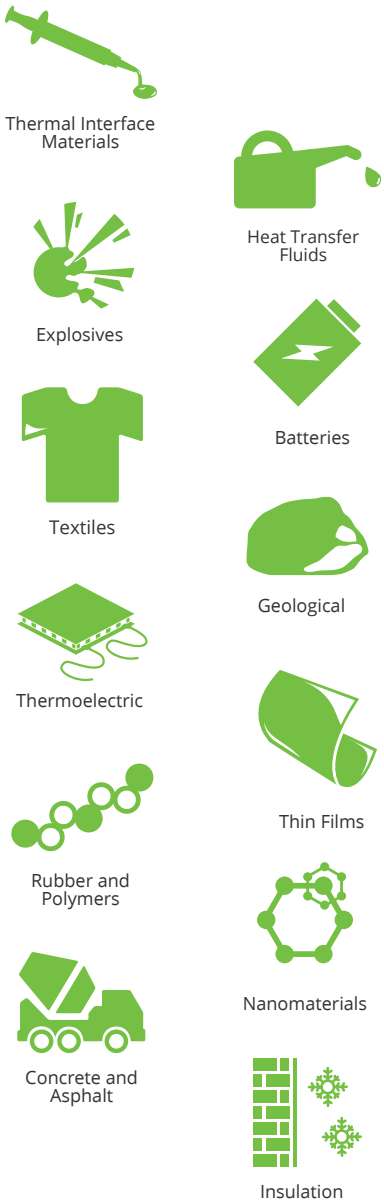

Solids: Taking Ceramics to New Heights

C-Therm has provided a breakthrough in the characterization of critical performance attributes of ceramics used for aerospace applications. The main advantage for solids applications is the simplicity of the sample format. The C-Therm TCi eliminates technician time required for sample preparation. The sample size flexibility allows the evaluation of actual product formats - avoiding the need to mock-up samples.

Powders: From Explosives to Ink Toners

The C-Therm TCi is being used to safely test the stability, degradation, and shelf life of explosives because it is the only instrument engineered for evaluating the thermal conductivity of powders safely. Sample volumes are as small as 1.85ml. This is also critical to a rapidly growing client base in metal hydrides, where materials are expensive and available in low quantities. The technology is also migratable to manufacturing environments as a cost-effective way to monitor powder processes for moisture and homogeneity.

Pastes: Keeping the Hottest Electronics Cool

The faster and smaller microprocessors become, the more heat they generate. C-Therm technology is providing vital insights into the development of all materials that contribute to the overall thermal budget, including thermal interface pastes and compounds. By altering the calibration timing parameters the C-Therm TCi allows testing with different amounts of heat penetration. This feature results in a variable scale of scrutiny to probe the material to ensure the homogeneous distribution of vital filler components.

Liquids: Fluids That Take the Heat Off

The C-Therm TCi is helping manufacturers improve the heat transfer properties of advanced nano-filled liquids. For engineered liquids, the wide range of operating temperatures make the TCi an attractive solution. The low amount of heat introduced during testing and small sample volume requirements negate the convective errors typical in liquid testing with traditional techniques.

COMPARISON OF METHODS

FASTER, EASIER, MORE VERSATILE

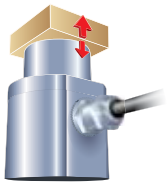

C-Therm TCi
(Modified Transient Plane Source)

Traditional Guarded Hot Plate

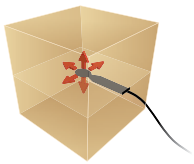

Transient Plane Source

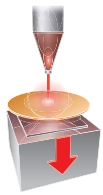

LaserFlash Diffusivity

SPEED & FLEXIBILITY				
Sample Preparation	None Required	Extensive	Some	Extensive
Testing Time	Seconds	Hours	Minutes	Hours*
Training Time	Minimal	Moderate	Significant**	Extensive
Non-Destructive	Yes	No	No	No
Method Development				
RANGE				
k-Range (W/mK)	0 – 500	0 – 2	0 – 100 (100 – 500 requires C_p)	0 – 500 (requires density & C_p)
Temperature Range (ºF) (ºC)	-58º to 392ºF -50º to 200ºC	-148º to 2552ºF -100º to 1400ºC	-148º to 1292ºF -100º to 700ºC	-238º to 5072ºF -150º to 2800ºC
SAMPLE CONFIGURATION				
Minimum	0.67” diameter (17mm)	6” x 6” (150 x 150mm)	Two Identical Samples 1” x 1” (25 x 25mm)	0.5” diameter (12.4mm) 0.004” thick (1mm)
Maximum	Unlimited	24” x 24” (600 x 600mm)	Two Identical Samples Unlimited	0.5” diameter (12.4mm) 0.004” thick (1mm)
Material Testing Capabilities	Solids, Liquids, Powders, Pastes	Solids	Solids, Liquids	Solids
PRICING	$	$ $	$ $	$ $ $

1 Based on publicly available information and feedback from users.
* Calculation of thermal conductivity from Laser Flash Diffusivity Measurement requires the additional following material properties: heat capacity (C_p) density, and coefficient of thermal expansion.
** Traditional Transient Plane Source requires iterative testing to obtain the correct experimental parameters in terms of power flux, test time, and sizing of sensor necessary to obtain accurate results.

MODULAR

SCALABLE SOLUTIONS

ACCESSORIES

Compression Test Accessory (CTA)

Compression of sample material increases the density and impacts the effective thermal conductivity of the material. C-Therm's Compression Test Accessory (CTA) enables researchers testing such materials to precisely control the densification in providing highly reproducible results that better reflect the effective thermal conductivity of the sample material. The CTA is particularly recommended to users testing textiles/fabrics, insulation batting, thermal interface materials, and powders.

High Pressure Cell (HPC)

The High Pressure Cell safely provides researchers the capability to characterize the thermal conductivity of samples under controlled pressure environments up to 2,000 PSI (~138 bar). The HPC is popular with researchers in the energy field, particularly in the characterization of gas hydrates.

Tenney Jr. Thermal Chamber

The TPS Tenney Jr. Thermal Chamber is recommended to users who wish to measure the thermal conductivity at non-ambient temperatures, from -50ºC to 200ºC. C-Therm's TCi 3.0 release software now enables direct control of the thermal chamber, bypassing manual operation and allowing users to pre-program their desired temperature cycles and walk away!

Small-Volume Test Kit (SVTK)

The Small-Volume Test Kit was originally developed with the US Navy specifically for testing energetic materials. The effectiveness of the accessory in reducing the volume requirements for testing samples make it ideal for characterizing the thermal conductivity of liquid samples. The SVTK is commonly applied in testing nano and heat transfer fluids, as well as emulsions.

DILATOMETRY MODULE

Dilatometry provides key expansion and shrinkage properties of materials under defined temperatures.

TEMPERATURE RANGE	Room Temperature to 1600°C
TEMP. RESOLUTION	0.1°C
MAX DISPLACEMENT	4mm
ΔI RESOLUTION	1.25nm/digit
ATMOSPHERE	Air, Vacuum, Inert Gas
SAMPLE DIMENSIONS	10 to 50mm long x max ϕ12mm
SAMPLE HOLDER	Fused Silica, Alumina
CONFIGURATIONS	Single or Dual LVDT System 1200°C or 1600°C furnace
HEATING ELEMENT	FeCrNi, SiCr
RATE OF INCREASE (ºC)	1ºC/min to 50ºC/min

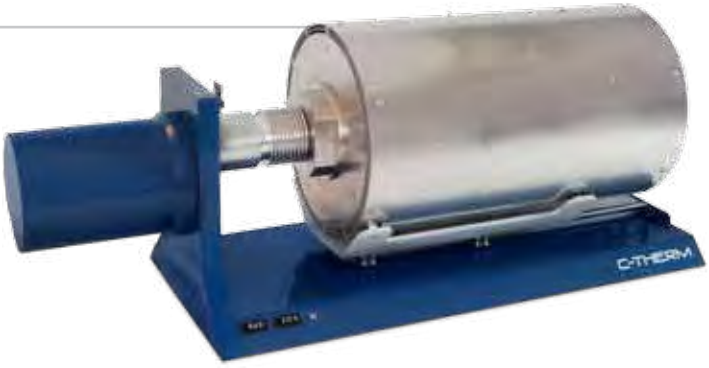

C-Therm's latest generation TCi offers an innovative new option to pair the controller with an optional dilatometer. This offers researchers significant savings in leveraging commonalities of the TCi control electronics, while expanding the platform's capabilities to dilatometry.

THERMAL EXPANSION • PHASE TRANSITION
SHRINKAGE • SINTERING

PROVEN

For over a decade, C-Therm's innovative sensor technology has been pioneering the way many of the world's most prominent manufacturers, research facilities, and academic institutions test and measure thermal properties of materials.

R&D 100 WINNER

The technology behind the C-Therm TCi represents a paradigm shift in thermal conductivity measurement and earned the inventor behind the technology the Manning Innovation Principle Award and an R&D 100 Award. These coveted awards are given to the top global innovators, and place C-Therm in the distinguished company of other winners, including developers of the ATM, Polaroid film, and anti-lock brakes.

Since its launch, C-Therm's unique technology has evolved to new levels of accuracy, speed, and flexibility. Today, it is being used around the globe for R&D, quality control, and on-line production monitoring in a wide range of industries.

C-THERM TCI SPECIFICATIONS	
Thermal Conductivity Range	0 to 500 W/mK
Test Time	0.8 to 2.5 seconds
Minimum Sample Testing Size	17mm (0.67") diameter
Maximum Sample Testing Size	Unlimited
Minimum Thickness	Nominally 0.02" (0.5mm), dependent on thermal conductivity of material
Maximum Thickness	Unlimited
Temperature Range	-50° to 200°C (-58° to 392°F)
Precision	Typically better than 1%
Accuracy	Better than 5%
Extra Hook-Ups Required	None
Software	Intuitive Windows®-based software interface. Easy export to Microsoft Excel®. Additional functionality offers indirect, user-input capabilities for a number of other thermo-physical properties including: • Thermal Diffusivity • Heat Capacity • Density
Input Power	110-230 VAC 50-60 Hz
Certifications	FCC, CE, CSA

For more information, contact:

C-THERM TECHNOLOGIES Ltd.

North America: 1-877-827-7623
Worldwide: 1-506-462-7201
info@ctherm.com | www.ctherm.com

COMPANIES AND ORGANIZATIONS USING C-THERM'S PATENTED TECHNOLOGY:

IBM
Whirlpool
Pioneer
General Electric
Kodak
Avery
3M
Philip Morris
Astra Zeneca
US Navy
Patheon
Universidade de Aveiro
Raytheon
Corning
Engelhard
Universidade Federal de Santa Caterina
Wyeth
Stowe Woodward
INSA
Dow Corning
Exxon Mobil
Hewlett Packard
NRC
Liberec University
National University of Singapore
Petrobas
Henkel
Nanocomposix
Canadian Explosives Research Lab

FLIR GF306 Infrared Cameras

SF6 Detection and Electrical Inspections

The FLIR GF306 detects and visualizes SF6 (Sulfur Hexafluoride) and 25 other harmful gases quickly from a safe distance and without the need to interrupt your plant's production process.

SF6 is a gas used in electrical substations at electric power plants as an insulator in circuit breakers and switchgear. The gas is also used in magnesium production and semiconductor manufacturing. SF6 is harmful to the environment. It has a global warming potential 24,000 times higher than CO2 emissions - more than any other greenhouse gas. Early detection and repair of leaks is a contribution of electric power plants to protect the environment.

Key Features

- Visualize gas leaks in real time
- Fully calibrated for temperature measurement applications
- Embedded GPS data in reporting
- Inspect without interruption of process
- Considerably reduce inspection time
- Trace leaks to source
- Spot leaks close by or meters away
- Verification of repair

Makes Reporting Easy

Images from FLIR GF-Series infrared cameras are recordable to any off-the-shelf video recorder for easy archiving and documentation.

Gases Detected

The FLIR GF306 infrared camera can detect the following gases:

- SF6 (Sulfur Hexaflouride) - 0.026g/hr
- Acetic Acid (C2H4O2)
- Anhydrous Ammonia (NH3)
- Chlorine Dioxide (ClO2)
- Dichlorodifluoromethane "FREON-12" (CCl2F2)
- Ethyl Cyanoacrylate "Superglue" (C6H7NO2)
- Ethylene (C2H4)

Specifications

Model Number	GF306
Imaging Specifications	

Detector Type	Cooled QWIP
Spectral Response	10.3 – 10.7 µm
Resolution	320 × 240
Total Pixels	76,800
Thermal Sensitivity	<15 mK @ +30°C (+86°F)
Accuracy	±1°C (±1.8°F) for temperature range 0°C to +100°C (+32°F to +212°F) or ±2% of reading for temperature range >+100°C (>+212°F)
Temperature Range	-40°C to 500°C (-40°F to 932°F)
High Temp Option	Not Available
Lens Options	Standard 14.5° × 10.8°; Optional: 24°
Zoom	1 – 8× continuous digital
Focus	Auto & Manual
Color LCD	4.3”; 800 × 480 Pixels
Adjustable Viewfinder	Tiltable OLED, 800 × 480 pixels
Video Camera w/Lamp	3.2 MP
Laser Spot	Yes
Video Out	HDMI
Analysis	
Spotmeters	10
Area Boxes	5 (min./max./avg.)
Profiles	1 live line (horiz. or vert.)
Delta T	Yes
Annotation	
GPS	Yes
File Storage	
Radiometric JPG	Yes
Radiometric Video (15Hz)	No

MPEG Video Recording	Yes

GF306 Videos

Watch the videos below to see footage taken with the FLIR GF306.

Product Documents

FLIR GF-Series Brochure (http://www.flirmedia.com/MMC/THG/Brochures/T820433/T820433_EN.pdf)
FLIR GF-Series - Fixed Lens Export Information (http://www.flir.com/uploadedFiles/Thermography_Americas/Service_and_Support/GF%20Series%20fixed%20lens.pdf)
FLIR GF-Series - Removable Lens Export Information (http://www.flir.com/uploadedFiles/Thermography_Americas/Service_and_Support/GF%20Series%20removable%20lens.pdf)

Articles

Oil and Gas Industry Faces Its Methane Problem (http://news.nationalgeographic.com/news/energy/2014/12/141211-oil-gas-methane-leaks-epa-rules/)
National Geographic

Delaware-size gas plume over West illustrates the cost of leaking methane (http://www.washingtonpost.com/national/health-science/delaware-sized-gas-plume-over-west-illustrates-the-cost-of-leaking-methane/2014/12/29/d34c3e6e-8d1f-11e4-a085-34e9b9f09a58_story.html)
Washington Post

Reports

Clean Air Task Force is a nonprofit organization dedicated to reducing atmospheric pollution through research, advocacy, and private sector collaboration. Read more (http://www.catf.us/resources/publications/files/WasteNot.pdf)

Carbon Limits (formerly ECON Carbon), based in Oslo, Norway, is an active player in energy efficiency and greenhouse gas emission reduction projects. With substantial experience in all the aspects of carbon markets and climate policy, Carbon Limits assists clients in identifying, developing, and monitoring emission reduction projects. Read more

Thermal imaging cameras for optical gas imaging (OGI) and furnace inspections

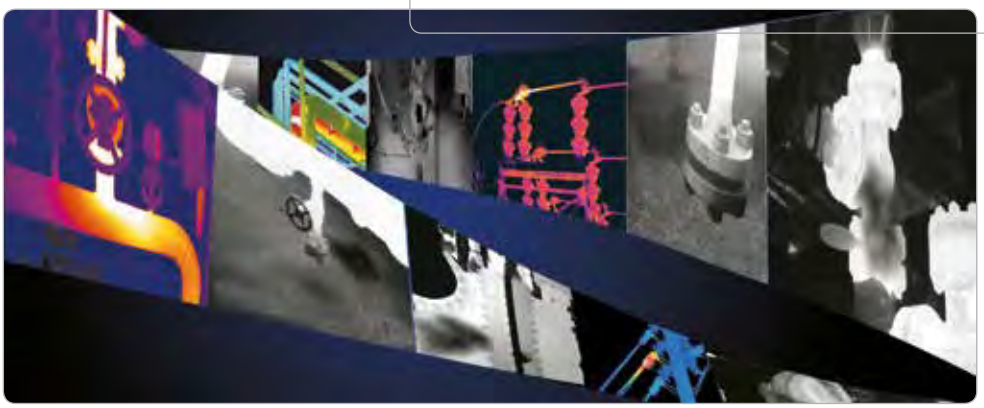

Detect gas leaks

Protect the environment

See through flames

Increase safety

FLIR GF306

Optical gas imaging especially of SF_6 and ammonia

The FLIR GF306 visualizes and pinpoints gas leaks of SF_6 and ammonia, without the need to de-energize high-voltage equipment or shut down the operation. The portable camera also greatly improves operator safety, by detecting emissions at a safe distance, and helps to protect the environment by tracing leaks of environmentally harmful gases.
SF_6 is used in the electric power industry as an insulator and quenching medium for gas-insulated substations and circuit breakers. Ammonia is produced in ammonia plants, and is used mainly for the production of fertilizers.

Cooled detector
The FLIR GF306 contains a cooled Quantum Well Infrared Photodetector (QWIP). This highly sensitive detector visualizes gases in the 10.3 – 10.7 micrometer waveband. It will not only make gases, but also the smallest of temperature differences, clearly visible.

Temperature range
The FLIR GF306 visualizes temperatures from -40°C to +500°C.

Dual use
The FLIR GF306 can be used both for finding gas leaks and maintenance inspections.

Available lenses
The FLIR GF306 comes either with a fixed 14.5° lens or with a fixed 24° lens. A version with interchangeable lenses is also available but requires a US Department of State license.

The FLIR GF306 detects the following gases:

- Sulfur Hexafluoride (SF_6)
- Acetyl Chloride
- Acetic Acid
- Allyl Bromide
- Allyl Chloride
- Allyl Fluoride
- Ammonia (NH3)
- Bromomethane
- Chlorine Dioxide
- Ethyl Cyanoacrylate
- Ethylene
- Furan
- Hydrazine
- Methylsilane
- Methyl Ethyl Ketone
- Methyl Vinyl Ketone
- Propenal
- Propene
- Tetrahydrofuran
- Trichloroethylene
- Uranyl Fluoride
- Vinyl Chloride
- Vinyl Cyanide
- Vinyl Ether

Industries:

Petrochemical & chemical industries

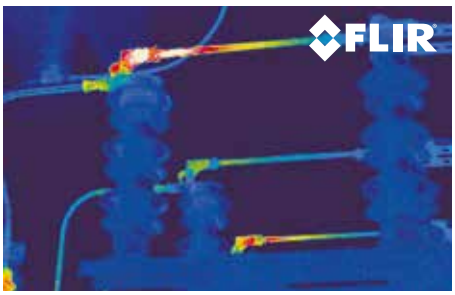

Electrical Utility

Captured SF_6 leak

FLIR GF304 / GF306 / GF320 / GF346

Technical specifications

Camera specific

	GF304	GF306	GF320	GF346
Imaging and optical data				
Focal Plane Array (FPA) / Spectral range	Cooled QWIP / 8.0–8.6 µm	Cooled QWIP / 10.3–10.7 µm	Cooled InSb / 3.2–3.4 µm	Cooled InSb / Built-in cold band pass filter 4.52 - 4.67 µm
Measurement				
Accuracy	±1°C for temperature range (0-100 °C) or ±2% of reading for temperature range (> +100 °C)	±1°C for temperature range (0-100 °C) or ±2% of reading for temperature range (> +100 °C)	±1°C for temperature range (0-100 °C) or ±2% of reading for temperature range (> +100 °C)	+/- 1 °C or +/- 1% of reading for temperature range 0° C to +300 °C
Measurement range	-20°C to +500°C	-40°C to +500°C	-40°C to +350°C	-20°C to +300°C
Power system				
Battery operating time	> 3 hours at 25°C and typical use	> 2 hours at 25°C and typical use	> 3 hours at 25°C and typical use	> 3 hours at 25°C and typical use
Start-up time	Typically 8 min. @ 25°C	Typically 10 min. @ 25°C	Typically 7 min. @ 25°C	Typically 7 min. @ 25°C
Environmental data				
Operating temperature range	–20°C to +40°C	–20°C to +40°C	–20°C to +50°C	–20°C to +50°C
Gas detection				
Gases	• R404A • R407C • R410A • R134A • R417A • R422A • R507A • R143A • R125 • R245fa	• Sulfur Hexafluoride (SF_6) • Acetyl Chloride • Acetic Acid • Allyl Bromide • Allyl Chloride • Allyl Fluoride • Ammonia (NH3) • Bromomethane • Chloride Dioxide • Ethyl Cyanoacrylate • Ethylene • Furan • Hydrazine • Methylsilane • Methyl Ethyl Ketone • Methyl Vinyl Ketone • Propenal • Propene • Tetrahydrofuran • Trichloroethylene • Uranyl Fluoride • Vinyl Chloride • Vinyl Cyanide • Vinyl Ether	• Benzene • Ethanol • Ethylbenzene • Heptane • Hexane • Isoprene • Methanol • MEK • MIBK • Octane • Pentane • 1-Pentene • Toluene • Xylene • Butane • Ethane • Methane • Propane • Ethylene • Propylene	• Acetonitrile • Acetyl cyanide • Arsine • Bromine isocyanate • Butyl isocyanide • Carbon monoxide • Chlorine isocyanate • Chlorodimethylsilane • Cyanogen bromide • Dichloromethylsilane • Ethenone • Ethyl thiocyanate • Germane • Hexyl isocyanide • Ketene • Methyl thiocyanate • Nitrous oxide • Silane

Automatic (one Touch) and Manual Focus w/ 1 to 8 Continuous Digital Zoom helps you to deliver the perfect picture at ease.

Tiltable, flip-out 4.3" High Contrast Color LCD allows you to view targets more safely from any angle.

General specifications

Imaging and optical data	
Field of view (FOV) / Minimum focus distance	14.5° lens: 14.5° x 10.8° / 0.5m 24° lens: 24° × 18° / 0.3 m
F-number	1.5
Focus	Automatic (one touch) or manual (electric or on the lens)
Zoom	1–8× continuous, digital zoom
Digital image enhancement	Noise reduction filter, High Sensitivity Mode (HSM)
IR resolution	320 × 240 pixels
Thermal sensitivity / NETD	<15 mK @ +30°C
Sensor cooling	Stirling Microcooler (FLIR MC-3)
Electronics and data rate	
Full frame rate	60 Hz
Image presentation	
Display	Built-in widescreen, 4.3 in. LCD, 800 × 480 pixels
Viewfinder	Built-in, tiltable OLED, 800 × 480 pixels
Automatic image adjustment	Continuous/manual; linear or histogram based
Manual image adjustment	Level/span
Image modes	IR-image, visual image, High Sensitivity Mode (HSM)
Measurement analysis	
Spotmeter	10
Area	5 boxes with max./min./average
Profile	1 live line (horizontal or vertical)
Difference temperature	Delta temperature between measurement functions or reference temperature
Reference temperature	Manually set or captured from any measurement function
Emissivity correction	Variable from 0.01 to 1.0 or selected from editable materials list
Measurement corrections	Reflected temperature, distance, atmospheric transmission, humidity, external optics
Set-up	
Menu commands	Level, span Auto adjust continuous/manual/semi-automatic Zoom Palette Start/stop recording Store image Playback/recall image
Color palettes	Iron, Gray, Rainbow, Arctic, Lava, Rainbow HC
Set-up commands	1 programmable button, overlay recording mode, local adaptation of units, language, date and time formats
Storage of images	
Image storage type	Removable SD or SDHC Memory Card, two card slots
Image storage capacity	> 1200 images (JPEG) with post process capability per GB on memory card
Image storage mode	IR/visual images Visual image can automatically be associated with corresponding IR image
Periodic image storage	Every 10 seconds up to 24 hours
File formats	Standard JPEG, 14 bit measurement data included
GPS	Location data automatically added to every image from built-in GPS
Video recording and streaming	
Non radiometric IR-video recording	MPEG4 (up to 60 minutes/clip) to memory card. Visual image can automatically be associated with corresponding recording of non radiometric IR-video.
Visual video recording	MPEG4 (25 minutes/clip) to memory card
Radiometric IR-video streaming	Full dynamic to PC using USB or WLAN
Non radiometric IR-video streaming	RTP/MPEG4
Visual video streaming	MPEG4 using Wi-Fi Uncompressed colorized video using USB
Digital camera	
Built-in digital camera	3.2 Mpixel, auto focus, and two video lamps
Laser pointer	
Laser	Activated by dedicated button
Data communication interfaces	
WLAN	Peer to peer (adhoc) for iOS or infrastructure (network) for Android
USB	USB-A: Connect external USB device (e.g. memory stick) USB Mini-B: Data transfer to and from PC
USB, standard	USB Mini-B: 2.0 High Speed
Video	Digital Video Output (image)
Power system	
Battery type	Rechargeable Li Ion battery
Battery voltage	7.2 V
Charging system	In camera (AC adapter or 12 V from a vehicle) or 2-bay charger
Environmental data	
Storage temperature range	–30°C to +60°C
Humidity (operating and storage)	IEC 68-2-30/24 h 95% relative humidity +25°C to +40°C (2 cycl)
EMC	EN61000-6-4 (Emission) EN61000-6-2 (Immunity) FCC 47 CFR Part 15 class A (Emission) EN 61 000-4-8, L5
Encapsulation	IP 54 (IEC 60529)
Bump	25 g (IEC 60068-2-29)
Vibration	2 g (IEC 60068-2-6)
Physical data	
Camera weight, incl. lens and battery	2.48 kg
Battery weight	0.24 kg
Cameras size, incl. lens (L × W × H)	306 × 169 × 161 mm
Tripod mounting	Standard, ¼"-20
Housing material	Aluminium, Magnesium
Grip material	TPE Thermoplastic Elastomers

Scope of delivery

Thermal imaging camera, Hard transport case, Battery charger, Battery, 2 ea., Calibration Certificate, Downloads brochure, FLIR Tools PC software CD-ROM, FLIR VideoReport™ PC software CD-ROM, HDMI-DVI cable, HDMI-HDMI cable, Lens cap (mounted on lens), Memory card, Memory card adapter, Power supply, incl. multi-plugs, Printed Getting Started Guide, Printed important information guide, Registration card, Service & training brochure, Shoulder strap, USB cable, User documentation CD-ROM, Wi-Fi USB micro-adapter (depending on CE and FCC regulations regarding wireless equipment for your country)

Note: These specifications are for GF-Series with a fixed 14.5° or 24° lens.
Versions with an interchangeable lens are also available but these require a US Department of State Export license.

SPECIFICATIONS

FOR

0.4W INTEGRAL STIRLING CRYOCOOLER

MODEL SCI04R

SPECIFICATION: 04RJS0101（ISSUE B）

2014-04-08

Information contained in this document is the property of K.I.P. and is communicated for a specific matter. The receiver is in charge of this document and ensures that it will not be either copied or reproduced in all or part, and that the content will not be disclosed in any way to anybody except for its proper use.

Specifications are subject to change without notice.

1 SCOPE

This specification and acceptance test procedure describes the technical performance, quality guaranty and delivery requirements for a miniature Stirling cycle system to be used to cool an infrared detector to cryogenic temperatures. This cooler design model is solidly based on the concepts of direct detector mounting on the cooler's cold finger, and integral construction of cooler and Dewar envelope. The cooler contains an onboard temperature controller and driven by a DC brushless motor.

2 APPLICABLE DOCUMENTS

The following documents of the exact issue shown form a part of the specification to the extent specified herein. In the event of conflict between the documents referenced herein and the contents of this specification, the contents of this specification shall be considered a superseding requirement.

2.1 Government Documents

GJB150.1-1986 Environmental test methods for military equipments, General.

GJB151A-1997 Electromagnetic emission and susceptibility requirements for military equipment and subsystems.

GJB152A-1997 Measurement of electromagnetic emission and susceptibility for military equipment and subsystems.

GJB899-1990 Reliability test for qualification and production acceptance

2.2 K.I.P. Documents

SCI04R Specifications 04RJS0101 ISSUE G

3 REQUIREMENTS

3.1 Size

The configuration of the cooler confirm to the outline specified in ANNEX 1.

3.2 Electrical Connectors

All connectors used external the cooler shall be in accordance with ANNEX 2.
The function of these pins used connectors confirm to the Table1.

Table 1 Function of pins used connectors

Pin No	Function	Sign
1	Temperature Sensor Diode（- negative）	D-
2	Shut down	SWN
3	Stand By	STBY
4	Power Supply（- negative）	V-
5	Cool Down Indication	CD
6	Temperature Sensor Diode（- negative）	D+
7	No connect (test terminal only for manufacturer)	NC
8	Power Supply（+ positive）	V+
9	Motor Case	Case

The cooler is designed to operate from a power supply of 24V_{DC}±1V_{DC}. The cooler shall provide 0.5mA±0.1mA to drive the temperature sensor at ambient temperature.

3.3 Weight

The weight of the cooler shall not exceed 470g. (Cold finger protect cover and dewar not included)

3.4 Workmanship

Coolers shall be processed in such a manner as to be uniform in quality and shall be free from defects that will affect their life, serviceability, interchangeability, or appearance.

3.5 Labeling and marking

All labeling and marking shall be clear and legible throughout all the tests specified herein. The cooler shall have a nameplate marked with the Stock Number, the manufacturer's part number, the filling pressure and the date of manufacture.

3.6 Performance characteristics

The cooler shall meet the performance characteristics specified herein when adequate heat sinking or convective cooling is provided to ensure that any point on the cooler cylinder head shall no higher than 10°C above ambient air temperature.

3.6.1 Refrigeration Controlling and Indication Functions

The cooler's B49 hybrid controller shall be accordance with 3.6.1.1 to 3.6.1.7 at 23℃ ±2℃ ambient temperature, according to 4.6.6 test procedure.

3.6.1.1 Steady-state Cooling Capacity

The operation mode temperature sensor voltage shall be 1.048V±0.002V (equivalent to 80K±1K).

3.6.1.2 Stand By MODE (SB MODE)

At this mode the temperature sensor voltage shall be 1.029V±0.010V.

3.6.1.3 Cool-down Indication

At the operation mode: The cool-down indication is activated when the temperature sensor reaches 1.044V±0.010V，and is deactivated when the temperature sensor reaches 1.043V±0.010V.

At the SB mode: The cool-down indication is activated when the temperature sensor reaches 1.025V±0.010V，and is deactivated when the temperature sensor reaches 1.024V±0.010V.

3.6.1.4 Shut Down Control

The cooler shall have a remote shut down capability that stops the motor voltage but leaves all other voltages unchanged, and which is activated by closing S2 as described in ANNEX 2.

3.6.1.5 Power Input

The cooler is designed to operate at a rated voltage of 24VDC±1VDC. And the cooler can operate from a power supply of 18VDC-28VDC.

3.6.1.6 Chassis Isolation

The cooler has a Chromatic Anodized coating, and shall be isolated (not less than 20MΩ).

3.6.1.7 Chassis Grounding

All external metalized surfaces of the cooler shall be electrically conductive to system chassis with a maximum resistance of 0.2 Ω.

3.6.2 Accuracy and Stability of Refrigeration Controlling and Indication Functions

The fluctuations of the cold tip temperature at the operation and SB modes and of the cool-down indication at any constant ambient temperature in the range of -40℃～+70℃ shall be less than ±2K(±0.0034V).

The deviation of the values at any ambient temperature in the range of -40℃～+70℃, from the values at ambient temperature 23℃±2℃ shall be less than ±3K (±0.0051V).

3.6.3 Cool-down Time

The maximum cool-down time to reach a cold tip temperature from ambient with a 250J±20J thermal mass (from 300K to 80K) shall be in accordance with：

a) The cool-down time to reach a cold tip temperature of 80K in a simulation dewar at 23℃±2℃ambient temperature shall be less than 7 minutes.
b) The cool-down time to reach a cold tip temperature of 80K in a simulation dewar at -40℃±2℃ambient temperature shall be less than 7 minutes.
c) The cool-down time to reach a cold tip temperature of 80K in a simulation dewar at +70℃±2℃ambient temperature shall be less than 9 minutes.

3.6.4 Cooling Capacity

The cooler shall provide the minimum refrigeration capacity in accordance with：

a) The additional added electrical heat load at 80K in a simulation dewar at 23℃ ±2℃ambient temperature shall be no less than 270mW.
b) The additional added electrical heat load at 80K in a simulation dewar at -40℃ ±2℃ambient temperature shall be no less than 320mW.
c) The additional added electrical heat load at 80K in a simulation dewar at+70℃ ±2℃ambient temperature shall be no less than 120mW.

3.6.5 Power Consumption

a) The power consumption at full speed operation mode at 23℃±2℃ambient temperature shall be less than 15W, the power consumption at steady operation mode shall be less than 9W(without additional added electrical heat load).
b) The power consumption at full speed operation mode at -40℃±2℃ambient temperature shall be less than 15W.
c) The power consumption at full speed operation mode at +70℃±2℃ambient temperature shall be less than 15W.

In the temperature range of -40℃～+70℃ and at any operation conditions, the power consumption of the cooler shall be less than 17W.

3.6.6 Leak rate

The leak rate of the cooler shall be less than 8×10^{-9} Pa·m^3/sec at an ambient temperature of 23℃±2℃.

3.6.7 Acoustic noise

The cooler noise emission shall be less than 50dB at an ambient temperature of 23℃±2℃.

3.6.8 Vibration output

The cooler Vibration output shall be less than 20m/s^2 at an ambient temperature of 23℃±2℃.

3.7 Environmental conditions

3.7.1 High temperature, operating

The cooler shall not be damaged by operation up to +70°C.

Temperature: +70°C ± 2°C

Duration: 30 minutes

3.7.2 High temperature, storage

The cooler shall not be damaged by storage to +85°C.

Temperature: +85°C ± 2°C

Duration: 48 hours

3.7.3 Low temperature, operating

The cooler shall not be damaged by operation to -40°C.

Temperature: -40°C ± 2°C

Duration: 30 minutes

3.7.4 Low temperature, storage

The cooler shall not be damaged by storage to -55°C.

Temperature: -55°C ± 2°C

Duration: 24 hours

3.7.5 Temperature Shock

The cooler shall not be damaged (see 6.3.1) by sudden changes in temperature between -55°C and +85°C.

3.7.6 Vibration

The cooler shall not be damaged after exposure to the follow environmental conditions in the 3 perpendicular axes:

a) Sinusoidal(non-operating)

The vibration spectrum is:

5Hz to 9Hz:	12mm peak
9Hz to 27Hz:	4g peak
27Hz to 200Hz:	5g peak
200Hz to 300Hz:	4g peak
300Hz to 2000Hz:	2g peak
Rate:	1 octave/min.

b) Random(non-operating)

The random profile is:

5Hz to 28Hz:	linear from $0.0036g^2$/Hz to$0.08g^2$/Hz
28Hz to 250Hz:	constant at $0.08g^2$/Hz
250Hz to 2000Hz:	linear from $0.08g^2$/Hz to $0.0012g^2$/Hz
Duration:	1hours/ axis

3.7.7 Shock

The cooler shall not be damaged after exposure to shocks with the following levels:

a) Basic shocks(non-operating)

Waveform:	1/2 sine pulse
Acceleration, Duration:	25g, 6ms
Direction:	the (+) and (-) direction of 3 axis
Number:	3 shocks per axis per direction (18 shocks total)

b) High Intensity shocks (non-operating)

Waveform:	1/2 sine pulse
Acceleration, Duration:	50g, 6ms
Direction:	the (+) and (-) direction of 3 axis
Number:	3 shocks per axis per direction (18 shocks total)

3.8 Electromagnetic Radiation

The cooler (when properly connected for operation) shall comply with the following requirements.

CE102 – Conducted emission, power leads, 10 kHz～ 10MHz
CS101 – Conducted susceptibility, power leads, 25Hz ～ 50kHz
CS114 – Conducted susceptibility, bulk cable injection, 10kHz ～ 400MHz
RE102 – Radiated emission, Electric field, 10 kHz ～18 GHz
RS103 – Radiated susceptibility, Electric field, 10 kHz ～40 GHz

3.9 Reliability

The cooler shall have a Mean-time-To-Failure (MTTF) of at least 4,000 hours.

4 VERIFICATION

4.1 Classification of inspections

Inspections shall be classified as follows:

a) First article inspection (see 4.3)
b) Conformance inspection (see 4.4).

4.2 Inspection conditions

Except as otherwise specified herein, all examinations and tests shall be performed at the conditions of 3.1～3.4, GJB 150.1-1986.

4.3 First article inspections

First article inspections shall be performed by the contractor after award of contract and prior to production. First article inspection shall be performed on sample units which have been produced with equipment and procedures normally used in production.

4.3.1 Inspection requirement

Inspection requirements for First article are listed in Table 2.

4.3.2 Test

Three coolers are needed for First article inspections. 2 first article coolers shall be subjected to reliability testing and 1 first article coolers shall be subjected to all other tests listed in Table2. Tests may be conducted in any order.

4.3.3 Failure

If one or more sample coolers fail to meet any of the first article requirements and tests, the contractor shall immediately notify the government of the failure, the contractor shall determine the root cause of the failure and take appropriate corrective action. The contractor is required to submit a new set of first article samples which have incorporated the charges for inspection. A description of the

failures and corrective action taken should be included in the first article inspection reports.

4.3.4 Disposition of first article samples

First article samples shall not be considered as part of the procurement quantities.

4.4 Conformance inspection

4.4.1 Classification of Conformance Inspection

Conformance inspection shall be classified as Group A, B, C.

4.4.2 Group A inspection

Group A inspection shall be conducted on all coolers. Group A tests listed in Table2 may be performed in any order unless otherwise specified. Failure of any test shall be cause for rejection of that unit.

Table2 Inspection requirements

S	Inspection	First article inspection	Conformance inspection			Requirement paragraph	Test paragraph
			A	B	C		
1	Size	●	●	–	–	3.1	Measure
2	Weight	●	●	–	–	3.3	
3	Electrical Connectors	●	●	–	–	3.2	Visual inspection
4	Workmanship	●	●	–	–	3.4	
5	Labeling and marking	●	●	–	–	3.5	
6	Refrigeration Controlling and Indication Functions	●	●	–	–	3.6.1	4.5.1
7	Accuracy and Stability of Refrigeration Controlling and Indication Functions	●	●	–	–	3.6.2	4.5.2
8	Cool-down time	●	●	–	–	3.6.3	4.5.2
9	Cooling capacity	●	●	–	–	3.6.4	4.5.2
10	Power consumption	●	●	–	–	3.6.5	4.5.2
11	Leak rate	●	●	–	–	3.6.6	4.5.3
12	Acoustic noise	●	–	–	●	3.6.7	4.5.4
13	Vibration output	●	–	–	●	3.6.8	4.5.5
14	High temperature, operating	●	–	●	–	3.7.1	4.5.6.1
15	High temperature, storage	●	–	–	●	3.7.2	4.5.6.2
16	Low temperature, operating	●	–	●	–	3.7.3	4.5.6.3
17	Low temperature, storage	●	–	–	●	3.7.4	4.5.6.4
18	Temperature shock	●	–	–	●	3.7.5	4.5.6.5
19	Vibration	●	–	●	–	3.7.6	4.5.6.6
20	Shock	●	–	●	–	3.7.7	4.5.6.7
21	Electromagnetic Radiation	●	–	–	–	3.8	4.5.7
22	Reliability	●	–	–	–	3.9	4.5.8
Note: ●:Need inspection, –: Needn't inspection							

Table 3 Group B Sampling plan

Monthly Lot Size	Number of sample units monthly
1-99	1
100-299	3
300-499	5
500-999	7
1000 or more	10

4.4.3 Group B inspection

Group B inspections shall be conducted on coolers selected from units which have passed the tests in 4.4.2 (see 6.2). The sample(s) shall be tested in accordance with the inspections listed in Table2.

4.4.3.1 Sampling for group B inspection

Samples shall be selected in accordance with Group B sampling plan listed in Table3 may be performed in any order.

4.4.3.2 Group B failures

Actions required relative to group B failures shall be as specified in the contract.

4.4.3.3 Disposition of group B samples

Group B samples shall be accepted on contract subsequent to the tests of Table2.

4.4.4 Group C inspection

Group C inspection shall be conducted on coolers selected from units which have passed the tests in 4.4.2. Group C sampling plan shall be specified in the contract. Group C inspection shall be in accordance with Table2.

4.5 Test methods

4.5.1 Refrigeration Controlling and Indication Functions

4.5.1.1 Test Equipment

a) Simulation Test dewar: The test dewar shall enclose the cold-finger and cold-station.
The cold-station shall be as a 250J±20J copper thermal mass (from 300K to 80K). The heat load of the test dewar at 23℃±2℃ should be in the range of 190mW to 220mW.
b) High vacuum system: The vacuum is at least $3*10^{-2}$ Pa.
c) The electric test system and the control's control box.

4.5.1.2 Mount Method

a) The test dewar shall be mounted on the cooler.
b) The cooler shall be filled with high purity Helium at a pressure according to the mark of the cooler.

c) The cooler shall be connected with the high vacuum system and with the electrical control box.

4.5.1.3 Test Method

a) Connect the electric connector to the cooler. The connector includes sockets of power lines and other electric wires. Connect the power lines to a regulated power supply. Connect the other electric wires (cool down, shut down, stand by and temperature diode leads) to the control box, and connect a voltmeter to the control box. There are switchers of SHUT DOWN, STBY, OPEN/CLOSE and light of COOL DOWN on the control box.

b) Turn the remote SHUT DOWN switch to OFF, the STBY switch to OFF, and run the cooler in close cycle operation.

c) Record the temperature diode voltage required to light the COOL DOWN lamp. After the cold temperature up to 1.048V, Verify the cold temperature stabilizes at 1.048±0.002V.

d) Operate the STBY switch and verify the cold temperature stabilizes at 1.029V±0.010V. Then return the STAND-BY switch to its initial position (OFF).

e) Operate the SHUT DOWN switch and see that the cooler motor has stop working and that the temperature reading continues.
Let the cooler warm up until the COOL DOWN lamp shuts down. Record the temperature reading when the indicator shut down.
Return the SHUT DOWN switch to its initial state (OFF).

f) Vary the power supply voltage between 18-28VDC. The change of the temperature voltage shall be not more than ±3K (±0.0054V).

g) At 10:00 minutes, Turn the OPEN/CLOSE CYCLE switch to open mode and measure the cooling capacity.

h) At 20:00 minutes, Turn the OPEN/CLOSE CYCLE switch to close mode, and remove the additional heat load on the cold tip.

i) After the cold temperature stabilizes, Observe the cold temperature stability to be within ±2K(±0.0034V) at 30:00 minutes.

j) Disconnect the cooler and the vacuum system. Use a digital multi-meter, connect one clip to one of sockets of the connector, and another (with an alligator clip) to the body of the cooler. Read the resistance to be not less than 20MΩ.

k) Use a digital multi-meter, connect one clip on one point of the body, and the other clip on another point of the body. Read the resistance to be not more than 0.2Ω.

4.5.2 Accuracy and Stability, Cool-down time, Cooling capacity, Input power

4.5.2.1 Test equipment: see 4.5.1.1.

4.5.2.2 Mount method: see 4.5.1.2.

4.5.2.3 Test Method

a) Connect the cooler to the stand in the climate chamber. Set the chamber temperature to the required temperature, stabilize for 60 minutes.
b) Start the cooler.
c) Measure and record the cooling time to the required cold tip temperature, and the maximum input power.
d) Let the cooler run at the CLOSE modes, record the fluctuations of the cold tip temperature at any constant ambient temperature in the range of -40℃～+70℃. (shall be less than ±2K(±0.0034V))
e) Record the deviation of the values at any ambient temperature in the range of -40℃～+70℃, from the values at ambient temperature 23℃±2℃. (shall be less than ±3K(±0.0051V))
f) Apply a head load to the cooler, record the cold tip temperature after 10 minutes. (the fluctuations of the cold tip temperature shall be less than ±2K) The total heat load equivalent to sum of the added heat load and the self heat load of test dewar.

4.5.3 Leak rate

Place the cooler under a test bell jar connected to a helium mass spectrometer, turn on the leak detection and read the leak rate.

4.5.4 Acoustic noise

The cooler shall be set up for operation in an area where the background noise level is at least 5 dB below the sound level to be measured. The cooler shall be operated and sound pressure measurements made with the cooler oriented in 4 positions in the same plane with each position approximately 90 degrees apart. Measurements shall be made with an octave-band analyzer.

4.5.5 Vibration output

The cooler shall be turned on for 15 minutes to allow it to reach equilibrium temperature. The acceleration shall be obtained by attaching an accelerometer to the area of cooler surface.

4.5.6 Environmental tests

4.5.6.1 High Temperature, operating

Temperature: +70°C ± 2°C
Duration: 30 minutes
Test content: Test the cooler as 4.5.2.

4.5.6.2 High Temperature, storage

Temperature: +85°C ± 2°C
Duration: 48 hours
Test content: Test the cooler as 4.5.2 after 2 hours from ending storage.

4.5.6.3 Low Temperature, operating

Temperature: -40°C ± 2°C
Duration: 30 minutes
Test content: Test the cooler as 4.5.2.

4.5.6.4 Low Temperature, storage

Temperature: -55°C ± 2°C
Duration: 24 hours
Test content: Test the cooler as 4.5.2 after 2 hours from ending storage.

4.5.6.5 Temperature shock

Low Temperature: -55°C ± 2°C
High Temperature: +85°C ± 2°C
Duration: 1 hour
Alternation: No more than 5 minutes
Number of cycles: 5
Test content: Test the cooler as 4.5.2 after 2 hours from ending shock.

4.5.6.6 Vibration

a) Sinusoidal(non-operating)

5Hz to 9Hz: 12mm peak
9Hz to 27Hz: 4g peak
27Hz to 200Hz: 5g peak
200Hz to 300Hz: 4g peak
300Hz to 2000Hz: 2g peak
Rate: 1 octave/min.

b) Random(non-operating):

The random profile is:
5Hz to 28Hz: linear from $0.0036g^2$/Hz to$0.08g^2$/Hz
28Hz to 250Hz: constant at $0.08g^2$/Hz
250Hz to 2000Hz: linear from $0.08g^2$/Hz to $0.0012g^2$/Hz
Duration: 1hours/ axis

Test the cooler as 4.5.2 after 2 hours from ending vibration.

4.5.6.7 Shock

The cooler shall not be damaged after exposure to shocks with the following levels:

a) Basic shocks(non-operating)

Waveform: 1/2 sine pulse
Acceleration, Duration: 25g, 6ms
Direction: the (+) and (-) direction of 3 axis
Number: 3 shocks per axis per direction (18 shocks total)

b) High Intensity shocks (non-operating)

Waveform: 1/2 sine pulse

Acceleration, Duration: 50g, 6ms
Direction: the (+) and (-) direction of 3 axis
Number: 3 shocks per axis per direction (18 shocks total)

4.5.7 Electromagnetic Radiation

The cooler shall be capable of meeting the requirements of 3.8 and shall be tested according to GJB152A-1997.

4.5.8 Reliability

A contractor prepared reliability test plan shall be used to demonstrate the reliability requirement of 3.9 and shall be tested according to GJB899-1990.

5 PREPARATION FOR DELIVERY

5.1 General

The cooler shall be preserved and packaged and packaged for electrical, mechanical, and physical protection in accordance with the requirements specified herein. The equipment shall be adequately cushioned, blocked, and braced, using suitable materials and containers as required, in such a manner as to afford maximum protection against corrosion, deterioration, and physical damage during storage and shipment.

5.2 Packing

Packing shall be in a manner that will ensure acceptance by common carrier and safe delivery at destination. Shipping containers shall comply with the Uniform Freight Classification Rules, or regulations of other carriers, as applicable to the mode of transportation.

5.3 Marking

In addition to any special marking required by the contract or order, unit packages, intermediate packages, and exterior shipping containers shall be marked in accordance with TBD.

ANNEX 1 The outline configuration of the cooler SCI04R

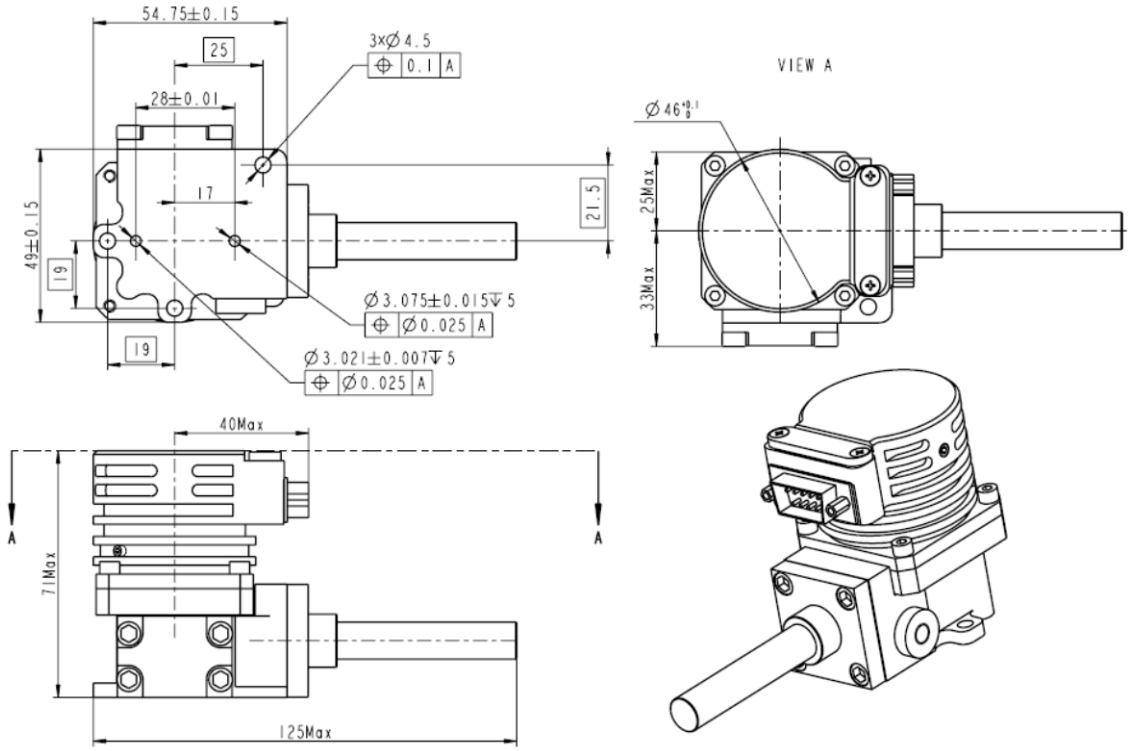

ANNEX 2 The Electrical Connectors of the cooler SCI04R

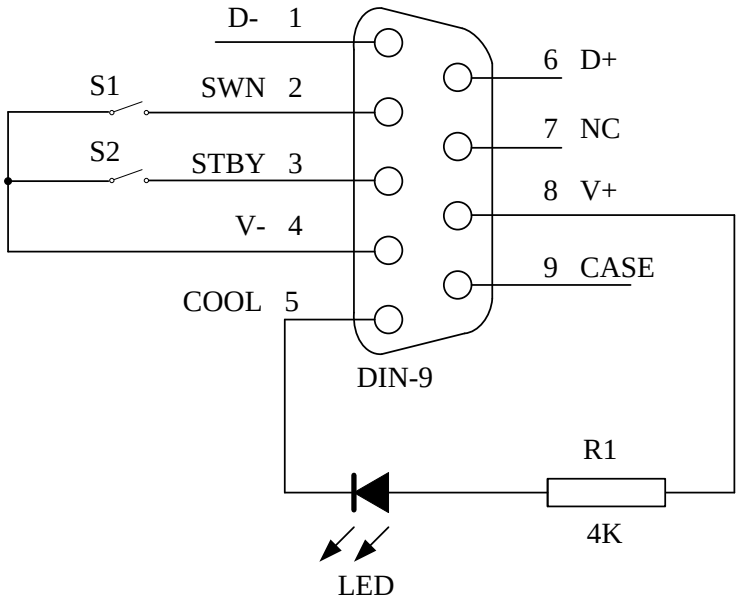

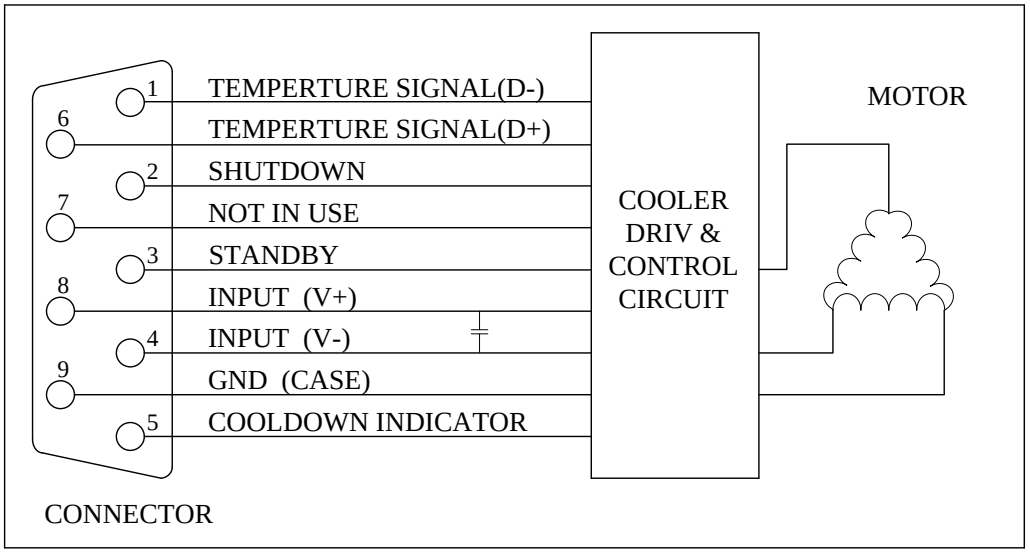

INSTRUTION SHEET

FOR Cryogenic Cooler Model C04S With B49 Temperature Controller

General

This instruction sheet assumes that the cooler's operator has the basic skills in the cryogenic filed and the electrical instrumentation.

WARNING!

The cryogenic cooler is a delicate electromechanical instrument. Take special care when moving, assembling or operating to avoid electrical or mechanical damage.

1. The cooler is designed to operate from a direct voltage source in the range of （18-28） VDC.
2. The cooler can operate in two modes, but Close loop mode is recommended.

2.1 Open loop

In this mode the temperature control function will not be used, and the cooler will operate at full cooling capacity.

2.2 Close loop

In this mode the temperature control function will be used, and the cooler will stabilize on the pre adjusted cooling temperature which has been set previously by K.I.P. according to the costumer's definition.

3. Typical current in 24 VDC will be 0.3-0.55 Amp. (Open loop).

   The current is affected by the ambient temperature and the motor temperature. Current limitation for continuous operation is 0.7 Amp.

   Low current and weak cooling may be a result of loss of gas caused by an external leak.

Keep cooling shin temperature less than 80℃ by a proper heat removal or forced ventilation by blower. Cooler performances will be improved by lowering its skin temp.

4. The cold spot is produced only at the expander tip. Efficient heat transfer from the cold area to the detector is conditioned on the thermal coupling.

   Special attention should be taken during the expander– Dewar integration to minimize the problems.
5. The cooler is manufactured from anticorrosion materials, but a continuous contact with corrosive solution or materials may cause local corrosion, avoid direct contact or cooler exposure to corrosive environment.

Opening or disassembling of the cooler is strictly forbidden without K.I.P.'s written permission! Such an action will void K.I.P.'s warranty!

Caution: This website uses cookies. By continuing to browse the site you agree to our use of cookies. Continue | →

:: Cryogenics

- Joule Thomson Mini Coolers
- Stirling Cryocoolers
  - Integral Stirling Cryocooler System with rotary drive
  - Split Stirling Cryocooler System with rotary drive
- Pure Air Monitors

Investing in your future

INTEGRAL STIRLING CRYOCOOLER – ROTARY DRIVE

Description:
The cooler is intended for use in IR applications but can be used also in other applications. Le-tehnika's New Integral rotary Stirling cryocooler model SRI401 was developed on a basis of good results of the previous family ISMO with an aim of a longer life time and a smaller power consumption.
The concept of the direct integration of a detector on a cooler cold finger (DDCA) was implemented by the Expander design.

Picture:

Advantages:

- The operation of the Stirling compressor driven via DC brushless motor is smooth and silent, with low vibrations and an acoustic noise.
- Motor windings are outside of the working gas to prevent its contamination and prolong the lifetime and reliability of the cooler.
- Digital electronic drive is integrated in the cooler.

Technical Datasheet:
Brochure

For all other informations please do not hesitate and contact us on e-mail: cryogenics@le-tehnika.si or telephone number: +386 4 20 20 280.

Experts in Cryocooling

INTEGRAL STIRLING COOLER – SRI401
(0,5W@80K)

The cooler is intended for use in IR applications but can be used also in other applications.

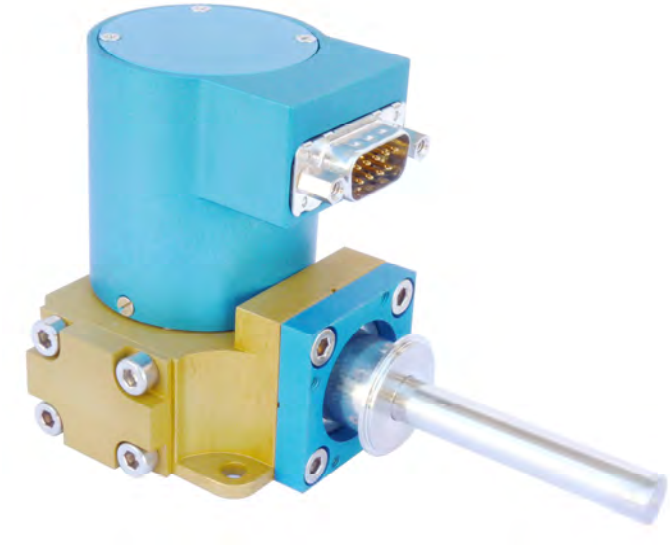

Le-tehnika's New Integral rotary Stirling cryocooler model SRI401 was developed on a basis of good results of the previous family ISMO with an aim of a longer life time and a smaller power consumption.
This model is a member of a new more reliable family of rotary driven Stirling coolers with main improvements on compressor side and also on expander.
The concept of the direct integration of a detector on a cooler cold finger (DDCA) was implemented by the Expander design.
The operation of the Stirling compressor driven via DC brushless motor is smooth and silent, with low vibrations and acoustic noise. Motor windings are outside of the working gas to prevent its contamination and prolong the lifetime and reliability of the cooler.
Small digital electronic driver with an onboard temperature controller is also fully programmable via RS232 port for a custom mission profile. Over-current protection, standby mode and remote shutdown are available as an option. The electronic board is integrated into the end of the electromotor. Different motor connections possible.

PERFORMANCE SPECIFICATIONS:
(for an ambient temperature of 23 °C)

Input Voltage: ……	21-28 VDC
Typ. Steady State Input Power: ……..	(200mW @80K @ 23°C): 8W Typ.
Cooldown time to 80K (200J): ……..	< 5 min
Maximum Input Power Required: ……..	17 W (during cooldown)
Operating Ambient Temperature Range: …….	- 40 °C to + 71 °C
Weight: …….…….…….…….	< 470gr
MTBF: …….…….…….……...	> 10000h (Expected)

Meets Environmental Conditions per MIL-STD-810D

Optional cold finger designs are possible upon request.

LE-TEHNIKA d.o.o.
Šuceva 27 , 4000 KRANJ - Slovenija
Tel.: +386 4 20 20 280, Fax.: +386 4 204 2122
cryogenics@le-tehnika.si
http://www.le-tehnika.com/cryogenics/program.htm

Dimensions:

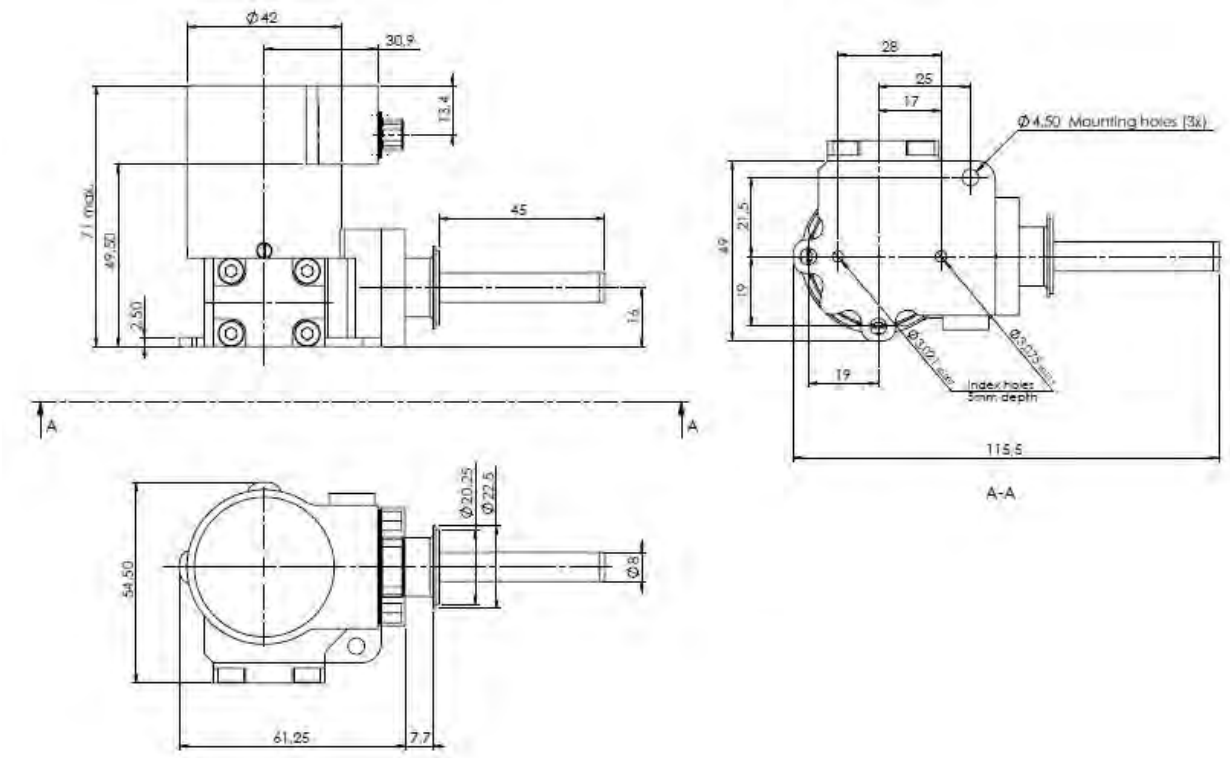

Electrical power consumption for different total cooling powers at 77K and 23°C ambient:

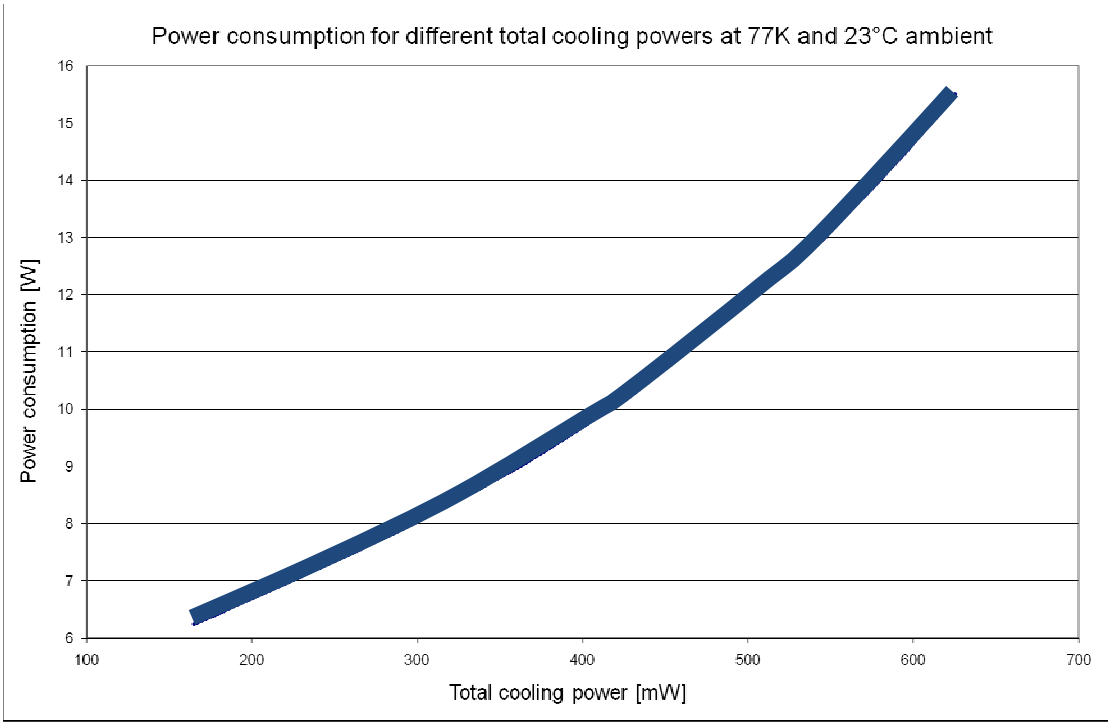

Specifications are subject to change without notice

LE-TEHNIKA d.o.o.
Šuceva 27 , 4000 KRANJ - Slovenija
Tel.: +386 4 20 20 280, Fax.: +386 4 204 2122
cryogenics@le-tehnika.si
http://www.le-tehnika.com/cryogenics/program.htm

Vision in Technology
ACHEMA 2015
15-19 June 2015
Frankfurt am Main
Germany
Visit us
Hall 4.2 Stand A29

Gas Infrared Camera for SF6 Finder MTG 80

Sulfur Hexafluoride, SF6 is an insulation gas used widely in high voltage equipment, the aging of equipments can cause SF6 leakage and emissions, and SF6 is greenhouse gas with a global warming potential of 23,900 times the potential of CO2. Gasfinder MTG infrared camera can detect accurately leakage spot from faraway distance to prevent hazards workers and public, also preserve the environment now and for future generations.

SF6 gas has significant impact of global climate change, also has strong capacity of infrared absorbance. MTG80 is particular gas camera to detect SF6 leaks and offer bright and vivid thermal images to verify the leaks location rapidly and accurately. It is ideal instrument to be used widely in gas-insulated substations, circuit breakers, and other switchgear.

Product Features

High sensitivity: with advanced technology to make it is capable to detect SF6 leaks with 194g gas leakage rate per year
Auto operation: instrument can be adjusted automatically laser intensity, make measurement easily and accurately.
Dual display design: crisp seeking imaging + LCD screen, can operate in the sunlight.
Built-in 4.0 mega-pixel digital camera: provide bright and vivid images.
Inspection safety: detect potentially dangerous leaks to be monitored from several meters away.

Application

MTG GasSee Infrared Camera is specialized for high voltage and ultra-high voltage power industry using SF6 gas as insulation. MTG GasSee product can detect SF6 gas leakage efficiently and accurately in a safe distance.

(/request/brochure-request.html)

Request for product brochure (/brochure-request)

mks
Technology for Productivity

DESIGNATED
SAFETY ACT
www.safetyact.gov
SCIENCE AND TECHNOLOGY
U.S. DEPARTMENT OF HOMELAND SECURITY
™

FTIR Gas Analysis

WWW.MKSINST.COM

AIRGARD® CWA/TIC

AMBIENT AIR ANALYZER FOR CONTINUOUS CHEMICAL WARFARE AGENT (CWA) AND TOXIC INDUSTRIAL CHEMICAL (TIC) MONITORING

RAPID RESPONSE • VERY LOW FALSE ALARMS • HIGH RELIABILITY • SELF CONTAINED

The MKS AIRGARD ambient air analyzer is an ultra-sensitive, Fourier Transform Infrared Spectroscopy (FTIR) based gas analyzer designed to rapidly detect toxic gases. The analyzer is capable of detecting parts per billion (ppb) levels of most CWAs and TICs below toxic, Immediately Dangerous to Life or Health (IDLH) levels within 20 seconds. This low level detection and fast response ensure sufficient time for an appropriate response such as: shutting down air handling systems, 'shelter in place' or evacuation of the affected area. The AIRGARD analyzer has been thoroughly tested by the Department of Defense for its sensitivity, specificity, response time, and immunity to false positive alarms caused by the sensing of, and alarming to, everyday benign, non-toxic solvents and industrial chemicals. This immunity to false alarms prevents unwarranted evacuation of buildings, associated interruptions of business, and emergency notifications when no threat materials are present in the building airflow.

Features & Benefits

- ppb detection limits – ability to discriminate and alarm to a broad range of threat substances. The AIRGARD analyzer has been tested against all ARFCAM listed threat gases, mixtures of threat agents and common interfering materials with no false positive alarms.
- Rapid response – typical time to alarm and identify threat agents < 20 seconds
- Automated, stand-alone operation – self-contained analyzer with embedded computer and sampling pump
- Continuous (24/7) air monitoring
- Ethernet connectivity and monitoring for remote troubleshooting
- Reliability – rugged design with minimum downtime
- Low maintenance – only occasional filter changes required
- High selectivity with ability to adapt to evolving threats – large "background" library file (375+ gases) with custom gas additions available
- Safety Act Designation

Applications

- Building air handling monitoring
- Enclosed public area air monitoring (arenas, subways, airport terminals, large office buildings, etc.)
- Air sampling and threat warning around CWA and TIC manufacturing and storage facilities — Chemical Facility Anti-Terrorist Standards (CFATS)

AIRGARD® Analyzer Operation

In the typical, non-alarming mode, the panel mounted "Gas Alarm" LED is green, indicating the sampled air is safe from toxic gases. If a toxic gas is detected within the concentration and probability limits set in the operational setup file, the "Gas Alarm" LED will change from green to flashing red. In addition to the visual, panel mounted status indication, the AIRGARD analyzer can communicate via Ethernet link to a sensor platform system to alert or alarm a command and control facility within the subject building. The AIRGARD analyzer will remain in this mode until a trained user acknowledges the alarm and initiates the necessary safety actions. In addition, if any of the sensor parameters (flow, temperature and pressure) are determined to be out of their optimal range, the "System Alarm" LED will turn yellow or possibly red (depending on the severity of the fault) and will communicate this information remotely via the Ethernet TCP/IP interface using an XML-based remote monitoring and control protocol. This interface uses state-of-the-art encryption technology to ensure a secure and robust connection between the remote AIRGARD analyzer and a central receiving computer.

The AIRGARD air analyzer is a totally self-contained monitoring device, having a sampling pump, FTIR spectrometer, controlling electronics and computer enclosed in a package measuring 18.5" x 24" x 7.5" which can be easily wall mounted. All AIRGARD air analyzers are individually tested for optimum signal-to-noise which ensures that consistent, reliable air monitoring will be provided in multiple deployments. The AIRGARD analyzer self calibrates after installation, constantly self checking the system health. This ensures readiness should a specified and applicable threat substance be introduced into the sampled air flow.

Specifications

Packaging

Dimensions	18.4" (W) x 25.4" (H) x 7.5" (L) [46.7 x 64.5 x 19.1 (cm)]
Weight	75 lbs. [34.1 kg]
Installation	Wall mount (bracket included)
Power Requirements	120 VAC, 50/60 Hz, 3A, 240 VAC available
Operating Temperature	10 to 40°C
Operating Humidity	Up to 65%

User Interface

Communication	TCP/IP (Ethernet); 1 USB port; XML Standard Protocol

Compliance Testing

The AIRGARD analyzer has been designed and tested to be fully compliant with the following:

- European Electromagnetic Compatibility Directive 89/336/EEC — assures product tolerance to:
  - Electrical stresses such as ESD (Electro Static Discharge)
  - EMF (Electro Magnetic Fields)
  - Transients
  - Surges
  - RFI (Radio Frequency Interference)

NOTE: Substance Specific Reports Available Upon Request

Ordering Information

Please contact your MKS Sales office for price and availability information.

Technology for Productivity

Global Headquarters

2 Tech Drive, Suite 201
Andover, MA 01810

Tel: 978.645.5500
Tel: 800.227.8766 (in USA)
Web: www.mksinst.com

MKS, FTIR/NDIR Analysis

651 Lowell Street
Methuen, MA 01844

Tel: 978.645.5500

AIRGARD - 8/13
© 2010 MKS Instruments, Inc.
All rights reserved.

AIRGARD® products may not be exported to many end user countries without both US and local government export licenses under ECCN 1A004.

Specifications are subject to change without notice. mksinst™ is a trademark and AIRGARD® is a registered trademark of MKS Instruments, Inc., Andover, MA.

THALES Cryogenics

W / 8 mm IDCA

UP / LS Contact seal coolers

LSF Flexure bearing coolers

LPT Pulse-tube coolers

Drive Electronics

Linear Drive Electronics

Rotary Drive Electronics

GUI Software

Lithium reserve batteries

LiSOCL2 batteries

RM3
550 mW / 8 mm IDCA

Category: RM Rotary monobloc coolers. Tags: IDCA, Rotary.

Description

Product Description

The RM3 is a high-performance rotary cooler for 8 mm IDCA dewars. As the drive electronics are integrated, no separate controller board is necessary for the RM3.

Properties

- Cold finger / approx. dewar bore: 8 mm IDCA
- Mass: 450 g
- Cooling power @ 110K/20°C: >550 mW
- Steady state input power: < 5.3 W
- Cooldown time to 77K @ 150J: < 6 min.
- Low noise: < 45 dBA

Related Products

RM2

RM4

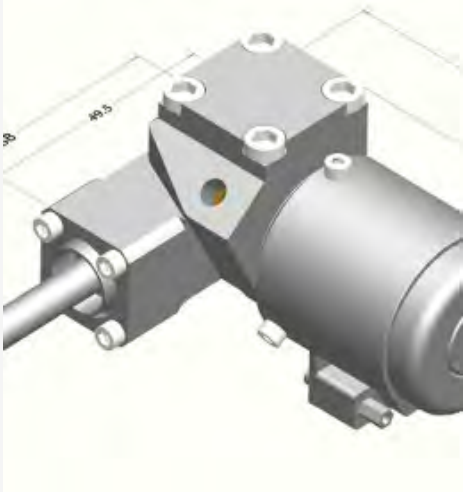

RM1

PUBLIC SUBMISSION

As of: 7/7/15 12:46 PM
Received: July 05, 2015
Status: Pending_Post
Tracking No. 1jz-8jt4-ew1f
Comments Due: July 06, 2015
Submission Type: API

Docket: BIS-2015-0016
Revisions to the Export Administration Regulations (EAR): Control of Fire Control, Range Finder, Optical, and Guidance and Control Equipment the President Determines No Longer Warrant Control Under the United States Munitions List (USML)

Comment On: BIS-2015-0016-0001
Export Administration Regulations: Control of Fire Control, Range Finder, Optical, and Guidance and Control Equipment that No Longer Warrant Control under the U.S. Munitions List

Document: BIS-2015-0016-DRAFT-0010
Comment on FR Doc # 2015-10353

Submitter Information

Name: William Robertson
Address:

MO,

Organization: None

General Comment

This action is a clear violation of the 5th amendment and another attempt by the current administration to create a back door method for gun reform. The sharing of information and ideas is the basis for a free market economy. A free market economy is a fundamental ideal that this country was founded upon and should not be restricted because of "feel good" legislation that has no hope of preventing the so called "gun crimes" in this great country.

In addition, stop trying to hide legislation such as this from the American people. This administration has a history of passing legislation without the proper notification and adequate review period for the American people to truly understand the proposed regulations. This EAR proposal is another example of this. The only information provided to the American people about this legislation is from the very websites you are seeking to control in order to prevent the spread of this information.

From: David Robeson <david_robeson@bullard.com>
Sent: Monday, July 06, 2015 4:56 PM
To: PublicComments
Subject: RIN 0694-AF75

Thanks for letting me submit a public comment on the above proposed rule. I work for Bullard (www.bullard.com) as a Logistics Manager. Bullard is a leading provider of industrial safety equipment that provides Thermal Imaging Cameras that are classified as a dual use item under the control of the Department of Commerce. Most of the cameras Bullard supplies are being used by Professional and Volunteer Fire Departments. However, Bullard does supply some cameras to the Police/Security markets and does have some Industrial users. Below are a list of my concerns about the new rule:

1. Complexity - First, the proposed rule that pertains to the BIS controls is 124 pages and cites numerous other rules that require you to refer to multiple documents. The document is very, very complex and has required our company to use many hours of resources. This type of regulation acts as a general deterrent for Mid and Small sized companies to export and seems to be at conflict with the general principles of the National Export Initiative (Executive Order I3534).

2. General Commercial Availability – Thermal Imaging Cameras (6A003) for fire fighting, security purposes are commercially available around the world. The cores are still coming from Wassenaar countries but that will probably change as the market continues to evolve. The 50HZ/60HZ Fire supply cameras are readily advertised on China ecommerce websites. I am afraid that the rules are becoming more restrictive while the commercial availability is increasing.

3. Design Flexibility Concerns – (640x480 cameras) Bullard does not supply a type of camera exclusively for military use and has never come under the ITAR rules. However, under the proposed rules the larger sized cameras would be strictly controlled through ITAR. We do not supply the larger style cameras right now. The cameras are high technology and this market changes very fast. If fire fighters start demanding larger units, Bullard will not be able to easily respond to the demands of the market.

Thanks,

David Robeson, LCB
Logistics Manager
E.D. Bullard Company
1898 Safety Way
Cynthiana, KY 41031

May 28, 2015

To: publiccomments@bis.doc.gov
From: waroot23@gmail.com

Subject: EAR Fire Control RIN 0694-AF75 05/05/2015 Proposed Rule

Relationships between ECCNs to comply with Wassenaar Dual Use List and USML XII

Two of the four singles in the original Export Control Reform Initiative were a single control list and a single agency to administer the controls. Proposed USML Category XII goes a long way in the opposite direction.

The following relationships between CCL ECCNs to comply with the Wassenaar Dual Use List and USML Category XII are technically so close as to suggest they should be controlled by only one agency, rather than two. The Department of Commerce has staff in BIS with many years of experience in these technologies. BIS would have to retain such staff, because only portions of these items would be transferred to DDTC in the Department of State. It would be needlessly expensive to duplicate this expertise in DDTC.

This analysis is incomplete. It may omit some commodities. It does omit all software and technology. The extent of the USML/CCL overlap for software and technology is particularly unclear, largely because "directly related" in XII.f is not defined, but also because software and technology is largely common to technically closely related items, one on the USML and the other on the CCL.

Regardless of agency jurisdiction in the United States, the technical descriptions in the proposed USML Category XII indicate levels of military significance which could be put to good use in Wassenaar negotiations to revise its Dual Use List.

It is recommended that each of the following portions of proposed USML Category XII (and others like them) be removed from that proposal and, instead, be incorporated in U.S. proposals to revise the Wassenaar Dual Use List:

CCL ECCN	USML XII
3A001.b.7	e.13
3A001.c.3	e.10,11
4A003 Note 1	e.10,11
6A002.a.2.a.2.a	e.2.i
6A002.a.2.a.3.a	c.1.i
6A002.a.2.a.3.a	e.2.ii

6A002.a.2.a.3.b	e.2.iii
6A002.a.2.a.3.b,c	c.1.ii
6A002.a.2.b.2.a	e.2.i
6A002.a.2.b.2.b	e.2.iv
6A002.a.2.b.3	e.2.iii
6A002.a.2.c.1	e.2.i
6A002.a.2.c.2	e.2.iv
6A002.a.2.c.3	e.2.iii
6A002.a.3.a.1	c.1, c.19
6A002.a.3.b.2.b	c.7,8
6A002.a.3.f	c.2
6A002.a.3.f	e.4.iii
6A002.a.3.g.1	c.1, c.19
6A002.a.3.g.3	c.7, c.16.iv
6A002.b	e.4.iv
6A002.c	e.2.iii
6A002.c.1	c.12.i
6A002.c.2	c.12.ii, iii
6A002.c.2	c.12.xi
6A002.d.2	c.9
6A002.d.2.a	e.7.i
6A002.d.2.b	e.8
6A002.d.3	e.2.vii
6A003.b.3	c.12.i
6A003.b.4.a,b	c.12.ii, iii
6A003.b.4.b	c.12.v, vi
6A003.b.4.b	c.12.viii, x
6A004	e.1
6A004	e.9
6A004.d.3	c.10,11
6A005.c.3.b	b.10
6A005.d.1.a.2	b.11
6A005.d.1.b.2	b.10
6A005.d.1.b.3	b.12
6A005.d.1.d.1.d	b.13.i
6A005.d.1.d.2.d	b.13.ii
6A005.d.1.d.3.b	b.13.iii
6A005.d.1.d.3.b	b.13.iv
6A007.b	d.4
6A007.c	d.5

6A008.d	b.7
6A008.e	d.6.iii
6A008.j	b.6
6A008.j.2	b.8.iv
7A001.a.1.a,	d.2
7A001.a.1.b	d.2
7A002	d.3
7A003	d.1
7A005.a	d.6.ii
7A005.b	d.7,8
7A105*	d.7,8

* As revised per MTCR recommendation above

<u>Comments in the order they appear in the proposal</u>

734.4(a)(5) delete this proposal

This would impose a U.S. license requirement on a foreign-produced commodity located outside the United States incorporating no USML-controlled component and only a *de minimis* CCL-controlled component "described in" 0A919.a.1 (*i.e.*, incorporating commodities classified under 6A002, 6A003, 6A990, or 6A993.a).

No foreign government would enforce such a U.S requirement.

Foreign persons would wish to avoid U.S. pressure to comply.

This would be a documented USG policy which would lead some foreign manufacturers to expand their "ITAR-free" mindset to "ITAR and EAR-free"; and, therefore, to design their products to avoid any US-controlled components, instead of only ITAR-controlled components.

See 740.16 comments below re "described in" 6A002 or 6A003.

See 0A919 comments below re 0A919.a.1 wording.

See 6A993 comments below re using a decontrol Note to define a control.

740.2(a)(7) Delete or revise this change

Making technology for production of 6A002.a.2 , 6A002.a.3, or 6A990 ineligible for all EAR license exceptions is inconsistent with eligibility of technology for production of comparable USML XII.c and e.4,5 for ITAR license exceptions.

Development technology (in 6E001) may be more sensitive than production technology.

740.16(a) and (b)(2) Delete expansion of ineligibility for these APR license exceptions from selected sub-items to all "commodities described in" 6A002 and 6A003

1. Note 2 to 6A002.a.2, Note to a.2.c.3, Note 2 to a.3, Notes to a.3.d, b.1, .c, and d.3 describe what is not controlled by 6A002 and Notes to 6A003.a.1, .b, b.2, Note 2 to b.4, and Notes 2, 3, and 4 to b.4.b describe what is not controlled by 6A003.

2. The 6A002 Note immediately following Related Controls describes a commodity jurisdiction procedure which could result in findings that "space qualified" detectors "defined" in a.1 or imaging sensors "defined" in b.2.b.1 are not controlled by ITAR and are also not controlled by 6A002 because of other applicable control parameters in 6A002.
3. Even changing "described in" to "controlled by" would apply to some products not, in fact, controlled, such as:
a. Instrumentation cameras without the plug-ins referred to in the 6A003 Note immediately following 6A003.a; or
b. 6A003.b.5 imaging cameras incorporating detectors "specified by" 6A002.a.1, if the specifications are 6A002.a.1.a or a.1.b but do not include both a.1.a.1 and a.1.a.2 or a.1.b.1 and a.1.b.2.

740.16(b)(3) Substitute Country Group A:1 for the list of countries.
This was done in the 05/21/2015 final rule on "country policy."

740.20(b)(2)(ii, x) delete these expansions of STA ineligibility
ITAR proposal does not remove eligibility for ITAR license exceptions for Category XII
740.20(b)(2)(x) If expansions not deleted, limit ineligibility for 6A002 to 6A002.a.2 and a.3; and limit ineligibility for 6E001 and 6E002 to "technology" for the "development" or "production" of 6A002.a.2 or a.3
For consistency with proposed 740.2(a)(7).

742.6(a)(8) Do not require licenses to Canada, United Kingdom, or Australia beyond those required for comparable USML items.
Usually DDTC does not propose 126 Supplement revisions for a USML Category until days before the effective dates of final rules for ECR revisions to that Category. BIS should not act prior to DDTC.

742.6(b)(1)(i) In the sentence on (a)(1) delete "arms embargo"
Many of the countries named in 126.1 and D:5 are not subject to arms embargoes.
In the sentence on F-14, delete "or otherwise required"
9A619.x is limited to "specially designed." The words "or otherwise required" include EAR99.

742.6(b)(1)(iv) Remove "use" software and technology from presumption of denial.

744.9(a,b) Change "described in" to "controlled in fact by" in both (a) and (b)
See comment above re 740.16.
Change 6A002 to 6A002.a.2 or a.3
For consistency with 740.2(a)(7).
Change 6A003 to 6A003.b.3, b.4.b, or b.4.c

0A919 Delete Related Controls (1) and (2) and substitute:

"Military commodities" are subject to ITAR controls if located in the United States, wherever produced, or produced in the United States, wherever located, including U.S.-produced components incorporated in foreign-produced items; but are not subject to ITAR controls if they are both located and produced outside the United States and if they do not incorporate ITAR-controlled components produced in the United States.

In proposed 0A919.a.1, change:

classified under 6A002, 6A003, 6A990, or 6A993.a (having a maximum frame rate equal to or less than 9 Hz and thus meeting the criterion of Note 3.a to 6A003.b.4)

to:

controlled by 6A002.a.2 or a.3; 6A003.b.3, b.4.b, or b.4.c; 6A990; or 6A993 (assuming 6A993 is revised to cover only 6A003.b.4.b regardless of frame rate)

0A987 heading Change "for firearms (including shotguns controlled by 0A984)" to:

"not controlled by USML Category XII"

Proposed XII.a.1 fire control and XII.f for XII.a.1 could be construed to cover all of 0A987 and 0E987. This is because all of the sub-items of WML 5 are under the WML 5 heading of "fire control, and related (items)." The logical bright line to separate the two is to limit XII to what is for firearms controlled by the USML and to exclude from 0A987 what is controlled by USML Category XII so modified.

0A987 Related Controls (1), delete from what is subject to ITAR:

", or laser aiming or laser illumination equipment not specified in 0A987.f"

and substitute the following sentence:

"0A987 applies only to the extent not controlled by USML XII."

The order for review is to look at the USML first and only consider the CCL after determining that the item is not USML-controlled.

2A984

USMLXII.c.17 has a resolution less (better) than 0.5 milliradians whereas 2A984 has a resolution between 0.5 and 1.0 milliradian. It thus appears that 2A984 makes sense only if XII.c.17 covers the same equipment with a resolution better than that covered by 2A984. However, there are several differences between the texts of the two items:

1. 2A984 Concealed object detection equipment vs. XII.c.17 terahertz imaging equipment or systems
2. 2A984 operating in frequency range vs. XII.c.17 peak response in frequency range
3. 2A984 spatial resolution vs. XII.c.17 resolution
4 2A984 at a standoff distance vs. XII.c.17 at a standoff range
5. 2A984 parts and components n.e.s. vs specially designed parts and components for Category XII, whether controlled in Category XII or in 6A515.x.

Except for parts and components, the other differences may have no substance. For example, the word "terahertz" adds no different substance to XII.c.17, since both texts include "3,000 Ghz," which is 3 terahertz. Similarly, "concealed object detection" adds no substance to 2A984, since that is the purpose of infrared "imaging" equipment. Nevertheless, removing the above five

differences would add clarification. It is recommended that:

1. In 2A984, “parts” and “components,” n.e.s be changed to “specially designed” “parts” and “components” therefor;
2. The word “terahertz” be deleted from XII.c.17; and
3. Except for the different resolution figures and the deletion of terahertz, the remainder of 2A984 be revised to use XII.c.17 terminology, unless DDTC prefers to achieve harmonization by using some verbiage from 2A984.

6A002.a.2 Note 1 Revise as follows:

Image intensifier tubes described in 6A002.a.2 as being controlled by 6A002.a.2 having a luminous sensitivity exceeding 500 microamps per lumen are subject to the ITAR.

Tubes described in 6A002.a.2 Note 2 or in the Note following 6A002.a.2.c.3 as being not controlled by 6A002.a.2 are not described as being controlled by 6A002.a.2 and, therefore, should not be included in what is subject to the ITAR.

6A002.a.3 Note 3 Revise as follows:

Focal plane arrays described in 6A002.a.3 as being controlled by 6A002.a.3 that are not in a “permanent encapsulated sensor assembly” ~~subject to the EAR~~ are subject to the ITAR.

Focal plane arrays described in 6A002.a.3 Note 2 or in the Note following 6A002.a.3.d as being not controlled by 6A002.a.3 are not subject to the ITAR, whether or not they are in a permanent encapsulated sensor assembly.

6A615 at the end of the following 6A615 sub-items, add:
“not controlled by USML Category XII (indicated sub-item)”

6A615	XII
a	b.8.i
b	c.10, c.11
d	c.1, c.19
e	b.3
f	c.16.ii
g	c.7, c.12, c.16.iv

6A615 In the heading of the following ECCNs in the ECCN column, insert:
“not controlled by (USML Category XII (indicated subitem) and/or 6A615 (indicated sub-item)”

ECCN	XII	6A615
6A008.j	b.8.i	a
6A004.d.3	c.10,11	b
6C004.a		c
6A002.a.3.g.1	c.1, c.19	d
6A005.e.2, f.2	b.3	e
6A002.a.3.g.3	c.7, c.12, c.16	g

6A615.a

Before “laser range-gated systems or equipment” insert “other”
Change “16,500 ft or greater” to “greater than 16,500 ft”
For consistency with XII.b.8.i

6A993 Revise to cover only what was removed from 6A003.b.4.b by part (a) of Note 3, i.e., frame rate equal to or less than 9 Hz.
None of the decontrol conditions in part (b) of Note 3 make sense in defining 6A993 controls

6E001 TSR exception (3) Revise as follows:
TSR: Yes except for the following: ... (3) “Technology” for “software” controlled by 6D001 or 6D002 “specially designed” for “space qualified” “laser” radar or Light Detection and Ranging (LIDAR) equipment ~~defined in~~ controlled by 6A008.j.1 ~~and controlled by 6D001 or 6D002~~; ...
TSR has relevance only to what is otherwise controlled. Note 2 states: “6A008.j does not apply to LIDAR equipment “specially designed” for meteorological observation.” That Note is part of what is “defined in” 6A008.j.1; but it describes what is otherwise not controlled, not what is otherwise controlled.

Relationships between ECCNs, USML XII, and Missile Technology Control Regime

6A007.b, 6A107.a XII.d.4 MTCR 12.A.3.a
It is recommended that “not controlled by USML XII.d.4" be added to 6A007.b and 6A107.a

6D002, 6D102, 6E001,2, 6E101,2, 7D101, 7E001,2, 7E101 XII.f for XII.b.6,7,8
MTCR 11D1, 11E2
It is recommended that “not controlled by USML XII.f for XII.b.6,7,8" be added to these ECCNs

6E101 XII.f for XII.d.4 MTCR 12E1
It is recommended that “not controlled by USML XII.f for XII.d.4" be added to 6E101

7A001, 7A101 XII.d.2 MTCR 9.A.3, 9.A.5
It is recommended that “not controlled by USML XII.d.2" be added to 7A001 and 7A101

7A002, 7A102 XII,d.3 MTCR 9.A.4
MT is missing from XII.d.3 in the proposed rule. It is recommended that
1. MT be added to XII.d.3; and
2. “not controlled by USML XII.d.3" be added to 7A002 and 7A102.

7A103.c XII.d.1 MTCR 9.A.7

MT description omits MTCR 9.A.7 navigational accuracy 200 m CEP or less.
It is recommended that:

1. MT be revised to include navigational accuracy 200 m CEP or less and be moved from d.1 to d.1.i.
2. "not controlled by USML XII.d.1" be added to 7A103.c

7A005, 7A105 XII.b.4; d.6,7 MTCR11.A.3

The MT portion of XII.b.4 (for "missiles") as it relates to XII.d on GNSS is consistent with MTCR 11.A.3.a for "missiles."
d.6.i, is for military application, which comes from MTCR 11.A.3.b.2; but the high speed MT description of d.6.i comes from MTCR 11.A.3.b.1 which omits military application.
d.6.ii encryption or decryption comes from MTCR 11.A.3.b.2 which includes for military or governmental services but includes only decryption, omitting encryption.
d.6.iii null steering antenna and d.7 anti-jam come from MTCR 11.A.3.b.3; but the proposed rule omits an MT description and 11.A.3.b.3 is broader than d.7.
d.6.iv is substantively the same as MTCR 11.A.3.a.

Therefore, it is recommended that:

1 d.6.i be revised to apply to high speed instead of military;
2 d.6.ii be amended to apply to encryption or decryption for military applications;
3 b.4 MT be expanded to apply not only to "missiles" but also to airborne applications at speeds in excess of 600m/s, decryption for military or governmental services, or anti-jam features;
4 7A005 heading "after (GNSS) receiving equipment" insert "not controlled by USML XII.b.4 or d.6
5 7A005 Related Controls delete "(2) For equipment "specially designed" for military use, see Categories XI and XV of the U.S. Munitions List (22 CFR 121)"
6 7A105 heading be revised to apply to MTCR 11.A.3.b.3 "not controlled by USML XII.d.6.iii or d.7" instead of to MTCR 11.A.3.b.1
7 7A105 Related Controls delete "(2) See Categories XI and XV of the U.S. Munitions List (22 CFR 121.1) for controls on similar equipment "specially designed" for defense articles."

7A006, 7A106 XII.b.6, b.7, b.8 MTCR 11.A.1

XII.b.6,7,8 make no mention of altimeters and 7A006 makes no mention of ITAR. Therefore, there appears to be no need to add "not controlled by USML XII.b.6,7,8" to the 7A006 or 7A106 altimeter controls. It is recommended that 7A106 be revised to delete "These items are subject to the ITAR."

7A117 XII.b.4 MTCR 2.A.1.d

The MT description in XII.b.4 targeting and guidance omits the MTCR 2.A.1.d guidance set accuracy of equal to or less than 3.33% of range. 2.A.1.d overlaps not only XII.b.4

but also many other parts of XII.a, b, and d. Even so, 2.A.1.d is broader than all these parts of XII combined, because of other limiting features therein which are not included in 2.A.1.d. Therefore, it is recommended that

1. 7A117 be revised to delete "These items are subject to the ITAR" and to insert "not controlled by USML XII" after "Guidance sets"; and
2. Accuracy be added to MT description of XII.b.4.

7D101, 7E001,2, 7E101 XII. f. for b.4 & d.6 MTCR 2D3, 2E1, 11D2, 11E2
It is recommended that "not controlled by USML XII.f for XII.b.4 & d.6" be added to these ECCNs

7D002,3, 7D101, 7D102b,c, 7E001,2,3, 7E101 XII.f for XII.d.1,2,3 MTCR 9D1,3,4, 9E1
It is recommended that "not controlled by USML XII.f for XII.d.1,2,3" be added to these ECCNs

Input on the nine issues on page 25800 of the 05/05/2015 Federal Register

(1) Lack of Wassenaar Coverage

WML 5 includes the following which are not included in the March 5 proposed rules:
5.b` data fusion, sensor integration equipment (broader than XII.e..11.ii)
5.c countermeasure equipment for WML 5.a or 5.b (broader than XII.d.7, d.8)
5.d field test or alignment equipment specially designed for WML 5.a, 5.b, or 5.c.

Conversely, unlike the existing USML Category XII, the following portions of proposed Category XII are not limited by "for military use" (or the rough equivalent "for defense articles") and are, therefore, broader than WML 5:
XII all of .a
XII.b except b.8.vi, b.9, b.14
XII.c except c.10, c.16.ix, c.21
XII.d except d.9
XII all of .e
XII.f for the above

(1)(a) Lack of MTCR Coverage

BIS did not ask for examples of lack of MTCR coverage, but should have done so to be consistent with the request for examples of lack of Wassenaar coverage.

7A106 (for MTCR 11.A.1) and 7A117 (for MTCR 2.A.1.d) are annotated on the CCL as "subject to the ITAR." However, XII.b.6,7,8 do not cover all of MTCR 11.A.1 and XII.b.4 does

not cover all of MTCR 2.A.1.d. Therefore, in order to remedy lack of U.S. coverage of commitments to MTCR, “subject to the ITAR” must be removed from 7A106 and 7A117 and be replaced by “not controlled by USML XII.b.6,7,8" for 7A106 and “not controlled by USML XII.b.4" for 7A117.

(2) Proposed CCL controls not controlled on Wassenaar Munitions or Dual Use List:

734.4(a)(5); 740.2(a)(7), 740.16(a)(2), (b)(2), (b)(3); 744.9; 0A919, 0A987; 2A984; 6A990; 6A993; 6D991; 6D994; 6E990; 6E994

Wassenaar does not require extra-territorial controls nor any controls on items controlled unilaterally by the United States

(3) Bright line between USML and CCL

USML Category XII should be limited to items needed for weapons controlled by the USML. Otherwise it could be construed as covering all of 0A987 and 0E987.

XII.c.17 and 2A984 should harmonize terminology to confirm their close relationship.

Revision recommendations above would brighten the lines between the USML and CCL re: 0A919; 6A002.a.2 Note 1 and a.3 Note 3; numerous MTCR controls; and numerous Wassenaar controls.

(4) Inadvertent ITAR or “600 series” controls on items in normal commercial use

ECCNs to comply with the Wassenaar Dual Use List are a rough approximation of items in normal commercial use. The table on pages 1 and 2 above identifies over 50 proposed new relationships between ITAR USML Category XII and CCL ECCNs to comply with the Wassenaar Dual Use List. The tables above under the 6A615 heading identify proposed new relationships between “600 series” and other ECCNs. These are not “inadvertent.” However, they are unprecedented in the scope of transfers from EAR to ITAR or “600 series.”

(5) Different parameters to cover items exclusively or primarily in military use

Limit USML Category XII to items for weapons controlled on the USML.
Leave components with dual military and civil use on the CCL.
Transfer to “600 series” components now on the USML which are not technically defined.

(6) Wassenaar Dual Use List items for items proposed for USML Category XII in normal commercial use

See table on pages 1 and 2.

(7) Use of phrase "permanent encapsulated sensor assembly"

Above recommended revisions to Note 3 to 6A002.a.3 would reduce unintended scope of this phrase but would not overcome technical problem that encapsulation may not prevent removal of a component without destroying or damaging it. A better approach would be to recognize that purchase of expensive equipment just to extract a component is unlikely.

(8) Removal of license exceptions

See above comments on 734.4(a))(5), 740.2(a)(7), 740.16(a) and (b)(2), and 740.20(b)(2)(ii, x).

(9) New license requirements to Canada

See above recommendation re 742.6(a)(8) not to get ahead of ITAR in reducing license exceptions to Canada. EAR should apply treaty arrangements not only to Canada but also to United Kingdom and Australia.

SCHOTT

SCHOTT North America,Inc.
400 York Avenue
Duryea, Pa. 18642
Phone: (717) 457-7485
jim.purcell@us.schott.com

Via DDTCResponse Team@state.gov

July 3, 2015

U.S.Department of State
Office of Defense Trade Controls Policy
Directorate of Defense Trade Controls
2401 E Streets, N.W.
12th Floor, SA-1
Washington DC 20522

Attention: Mr. Ed Peartree, Director, Office of Defense Trade Controls Policy, U.S. Department of State.

Regarding: Request for comments to proposed changes to ITAR Category XII.

Dear Mr. Peartree,

SCHOTT North America Inc., is a glass material, part and component manufacturer who supplies the United States and international marketplace. Our Advanced Optics Group supplies optical material, parts and components, the SCHOTT Lighting and Imaging Business Unit produces fiber optic parts and components, and our Electronic Packaging Business Unit produces electronic packaging parts and components. All of them service the commercial and defense markets, depending upon customer requirements.

SCHOTT North America Inc., recognizes and appreciates the current initiative to revise the previous export rules and regulations.

We would like to take this opportunity to comment on the proposed changes to Category XII of the ITAR.

Specific Comments and Request regarding Category XII.

1. Export control reform of Category XII creates the new category 6A615. Of particular concern to SCHOTT, is the inclusion of "blanks" of certain types of material.

   6A615 Military fire control, range finder, and optical, equipment, and "specially designed" "parts," "components," "accessories," and "attachments," as follows (See List of Items Controlled).

   c. Zinc selenide, zinc sulfide, germanium or chalcogenide optics blanks, being flat or initially curved, and having any of the following:
   c.1. Diameter exceeding 3 inches and thickness exceeding 1.5 inches;
   c.2. Diameter exceeding 5 inches;
   c.3. Length and width both exceeding 3 inches and thicknesses exceeding 1.5 inches; or
   c.4. Length and width both exceeding 5 inches.

SCHOTT

SCHOTT North America,Inc.
400 York Avenue
Duryea, Pa. 18642
Phone: (717) 457-7485
jim.purcell@us.schott.com

One of the materials, specifically listed in the new BIS category 6A615, is zinc sulfide. SCHOTT has a method of manufacturing this material that differs from the manufacturing process controlled in the EAR. Through a Commodity Classification Determination in May of 2014, this material was deemed EAR99 by the U.S. Commerce Department, no license required to most destinations. **The new proposal, 6A615, appears to control this raw material in the blank form.**

Please note, that it is common practice for a company to list blanks in a range of sizes in their catalogue. Normally, these shapes and sizes of "non-controlled" material would not be subject to export controls, they are usually considered Commercial off the Shelf (COTS). Now, as we understand it, zinc sulfide material falling into the specific listed sizes in 6A615, would be considered controlled.

We believe that this material should be controlled at the component/part level, not at the blank level. We hope that DDTC will consider the following comments, and remove the specific language regarding these blanks from the new category 6A615.

Additional notes:

- The new proposal listing IR blanks appears to be contrary to the initial spirit of Export Control Reform. Rather than reduce the levels of control, it expands that control.
- U.S. Optical material manufacturers are presently working in an extremely competitive global marketplace.
    - **This material is readily available throughout the world.**
    - International Competition from foreign manufacturers in the U.S. for the commercial market.
    - Regarding U.S. government purchases, exemptions and value determinations in the "Buy America" act allow U.S. component manufacturers to buy their raw materials from international suppliers.
    - Now with the new ECR proposal regarding "blanks", international customers, who already have an aversion to filling out our end user certificates for components and parts, and who have gone so far as to design out U.S. export controlled materials, will now have to supply the same information for "blanks", and face licensing for raw materials. This new proposal will create a disincentive to potential international customers to deal with a U.S. company.
- There are also many markets for this material, other than military:

SCHOTT

SCHOTT North America,Inc.
400 York Avenue
Duryea, Pa. 18642
Phone: (717) 457-7485
jim.purcell@us.schott.com

- IR Microscopes/Telescopes
- Surveillance cameras
- Machine Vision
- Agricultural inspection(hyperspectral imaging)
- Medical imaging
- Building inspection windows for IR illumination of runways
- Electrical windows for switchgear inspection

We respectfully request that the specific language regarding the control of "blanks" be removed from the new category 6A615.

2. **The determination of the export control level of Image intensification Tubes is made more difficult with the new regulations.**

- SCHOTT is a manufacturer of components that can be used in concert with Image Intensification Tubes. We are not a system or image intensification tube manufacturer. The level of detail required to apply the new rules are burdensome for component manufacturer. A clearer delineation between what is an ITAR and EAR controlled would help greatly.

- While the new regulations in the ITAR do not make use of the "Special Designed" statement, the new corresponding EAR classification does:

  - **6A002 Optical sensors and equipment and ''components'' therefor, as follows (see List of Items Controlled).**

    Related Controls: (1) The following commodities are ''subject to the ITAR'' (see 22 CFR parts 120 through 130): (a) ''Image intensifiers'' defined in 6A002.a.2 and ''focal plane arrays'' defined in 6A002.a.3 ''specially designed,'' modified, or configured for military use and not part of civil equipment;

We respectfully request simplification of the delineation between ITAR and EAR controlled Image Intensification Tubes. These rules appear overly detailed, and as a result are extremely burdensome for a material, part and component manufacturer to apply.

General Comment Regarding the Export Control Reform.

We would like to also take this opportunity to make some general observations regarding the Export Control Reform initiative. We feel that it is important for DDTC to be aware of some of the issues that we have discovered since the beginning of ECR.

The new rules are not designed for material, component or part manufacturers, but for the manufacturer of end products.

1. Material, component and part manufacturers are at a strict disadvantage applying the new rules. The amount of information regarding the product end use required to make an export determination, in most instances, is not readily available to material, component and part

SCHOTT

SCHOTT North America,Inc.
400 York Avenue
Duryea, Pa. 18642
Phone: (717) 457-7485
jim.purcell@us.schott.com

manufacturers. To apply the new export control rules to a component or part, the customer must supply us with significant detail regarding:

i) What is the part, and what is it going to be used in ?
ii) The end use and performance parameters of the actual device (or component parts in that device).
iii) And now with Category XII, when the part will be incorporated into the device, in the United States, or outside of the U.S?

As a manufacturer of optical, fiber optic, and electronic packaging material, components and parts, we have to go back to the customer, sometimes more than once, for additional information. Some of this information was required in the past, but never at this level of detail. This places us at a disadvantage in the market place. Many, if not all of our parts, can be sourced outside of the United States. It is also fair to note that there are often legitimate reasons where a customer is unwilling to share detail with their suppliers, i.e., proprietary or competitive.

The number, specificity, and sometimes contradictory nature of the "notes" system, can be difficult to apply. For example, in CatXII, note to paragraph E, essentially states that an ITAR part is subject to the EAR, if it is included as an integral part of an item subject to the EAR, if it can't be removed without destroying it. If it is not yet incorporated, and it is shipped separately, it remains an ITAR controlled part. **How does a component manufacturer know if something can be removed from the end use without damaging it?**

2. For a manufacturer of materials, components and parts, making an export control determination simply takes longer, and is more difficult. All exporters, big or small, will have additional compliance costs, however, manufacturers of customer requested parts, components and materials in particular, will be working at a disadvantage. For this type of a manufacturer, every new order has potentially never been seen before, therefore creating a constant requirement for compliance review.

We appreciate the opportunity to comment on the new proposed rules. Hopefully our comments will contribute to a more beneficial system for everyone.

Thank you for your time and consideration.

SCHOTT North America Inc.,

James Purcell
International Trade Compliance Manager.
Empowered Official

From: Bill Parrish <Bill@thermal.com>
Sent: Monday, July 06, 2015 2:35 PM
To: PublicComments
Cc: Bill Parrish
Subject: RIN 0694-AF75: Proposed Revisions to the EAR
Attachments: Social & Economic Benefit of Thermal Imaging.pdf; ATT00001.htm; Recommendations for the proposed modifications to Category XII.pdf; ATT00002.htm

The attached two documents are submitted as comment to RIN 0694-AF75: Proposed Revisions to the EAR. Although specific recommendations are made to ITAR Amendment—Category XII, these recommendations would necessarily require coordination with DoC and are therefore included.

Respectfully,

William Parrish
Seek Thermal, Inc.

Recommendations for the Proposed Modifications to Category XII

Readout Integrated Circuits (ROICs)

To date, ROICs for IRFPAs have not been controlled by ITAR. The proposed regulations would have a very confusing and chilling effect on domestic developments. Published papers and documents can not be taken out of circulation, patents unpublished, the Internet sanitized, or international contracts unilaterally modified. It is unrealistic and illogical for ROIC designs in open design, development, or production today to be treated under ITAR tomorrow.

The underlying ROIC technology, analog CMOS integrated circuit, has been around for over 40 years and is taught as part of most university electrical engineering curriculum around the world. International publications such as the IEEE Journal of Integrated Circuits and The International Society of Optics and Photonics, present the latest circuit and architectures for ROIC design. SPIE offers short course classes in ROIC design at international symposiums.

Foreign IRFPA competitors have clearly demonstrated ROIC design capability – witness the current wide assortment of very capable IRFPAs offered by nations across the globe. Some US designed ROICs are actually manufactured offshore (TSMC), while companies in Europe and Asia offer custom silicon design services including ROICs.

Further, and perhaps most damaging to US IRFPA capability, domestic semiconductor companies offering custom foundry services to fabricate ROIC wafers have little interest in imposing ITAR on their high volume highly competitive CMOS production lines just to process relatively few ROIC wafers leaving US IRFPA manufacturers, especially defense contractors looking for the most advanced capability, with few alternatives.

The preamble and selling points of the regulation change proposal highlight the changes to have little interference with commercial offerings, often using "specifically designed" as a key separation. In fact, the proposed regulations use the "specifically designed" designation for ROICs destined to be fabricated into IRFPAs. Unfortunately, this language has the opposite effect in this context as it encompasses ROICs "specifically designed" for commercial IRFPAs not intended for use as defense articles. As an example, the ROIC for Seek Thermal's 206 X 156 pixel microbolometer IRFPA was designed, developed, and privately funded for the specific purpose of commercial thermal imaging. Yet at 32,136 pixels, the design exceeds the proposed limit of 19,200 pixels.

We recommend not adding ROIC control to the regulations by deleting proposed Category XII (e)(4) & (e)(5). Alternatively, if removal is found not to be acceptable, modifying Category XII (e)(4)(iii) to read:

"A microbolometer IRFPA having greater than ~~19,200~~ <u>787,000</u> elements"

to be consistent with the resolution of widely commercially available foreign IRFPAs.

Retaining the "specifically designed" designation, Category XII (e)(4) could be modified as follows:

"Read-Out Integrated Circuits (ROICs) specially designed for defense article application for an IRFPA controlled in paragraph (c)(2) of this category or detector elements therefor, as follows:"

In light of keeping our warfighters supplied with the most advanced capability, this option (or going forward with the proposed ROIC control regulations) handicaps US defense contractors in not being able to use the most advanced and economical production resources and is therefore not recommended.

"Permanent encapsulated sensor assembly"

With significant foreign commercial availability of IRFPAs, the requirement for a "*permanent encapsulated sensor assembly"* (Category XII (c)(2) and (5) and Note 1 to Paragraph C) is not necessary and should not be incorporated into export regulations.

The definition and specific requirements need clarification if this limitation is incorporated. We recommend that this definition allow for:

"permanently attaching a wafer level vacuum packaged IRFPA to a printed circuit board with associated electronics that makes the assembly inoperable if attempts to disassemble or tamper with the assembly are made."

Social and Economic Benefits of Thermal Imaging

The social and economic benefits of thermal imaging outweigh any remaining US military advantage to be gained by continued export control of commercial microbolometer products. Let's take a look at why.

Thermal Imaging saves lives.
Thermal imaging has become an important tool in health and medicine. It has found applicability from cancer research to coronary bypass surgery. News articles tout thermal imaging as a meaningful aid in suppressing the current MERS epidemic.

Passengers wearing masks to prevent contracting Middle East Respiratory Syndrome (MERS) walk past a thermal imaging camera (unseen) at Incheon International Airport in Incheon, South Korea, June 2, 2015. REUTERS/KIM HONG-JI

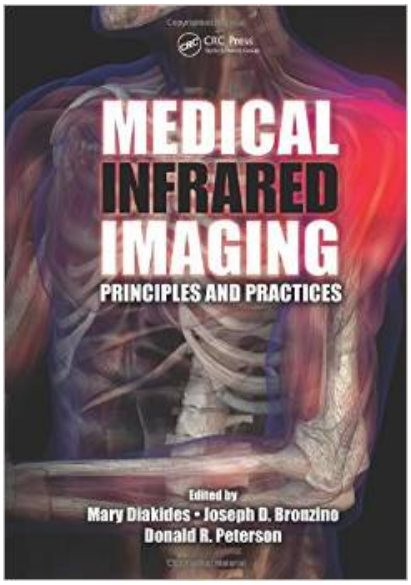

Firefighters around the globe consider the TIC (thermal imaging camera) as basic safety equipment. Introduced for firefighting aboard ships by the British Royal Navy in the 1970s, the technology allows the fireman to safely navigate in a rooms filled with smoke and in total darkness, often aiding lifesaving rescues. Search and rescue teams use handheld and airborne thermal cameras to locate the lost or injured in the wilderness or earthquake collapsed buildings. Thermal cameras were rushed to the scene of the 9/11 rescue operation.

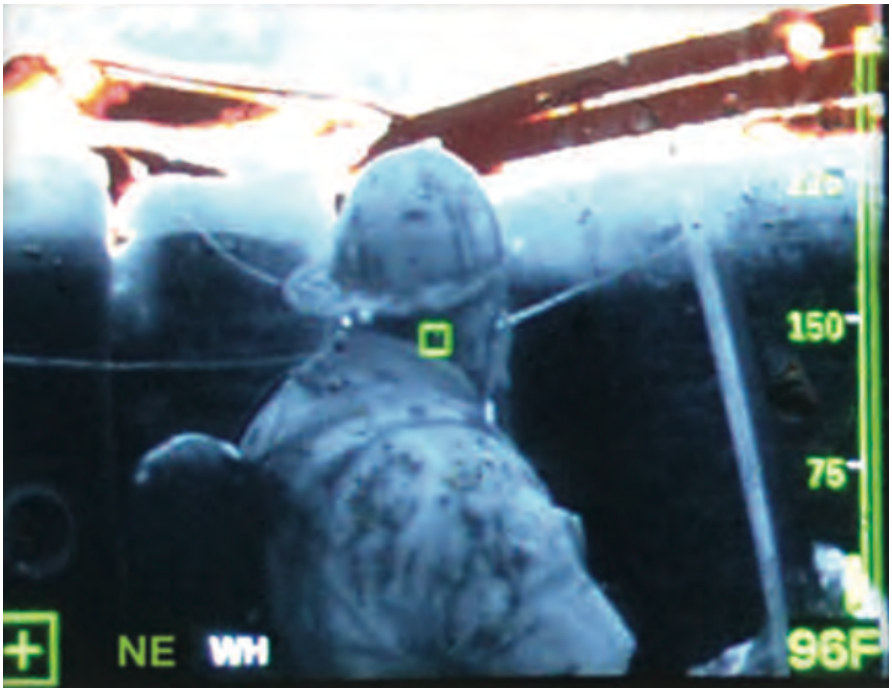

Thermal imaging is big on the automotive safety roadmap. Moving from dash displays to autonomous warning and braking systems, thermal imaging systems will be helping to prevent tens of thousands of pedestrians from being killed each year in vehicle accidents worldwide. Thermal imaging will also be key to the prevention of the over one million collisions with deer we have in this country alone. Projections are by 2020, more than a million automobiles will be equipped with thermal night vision systems.

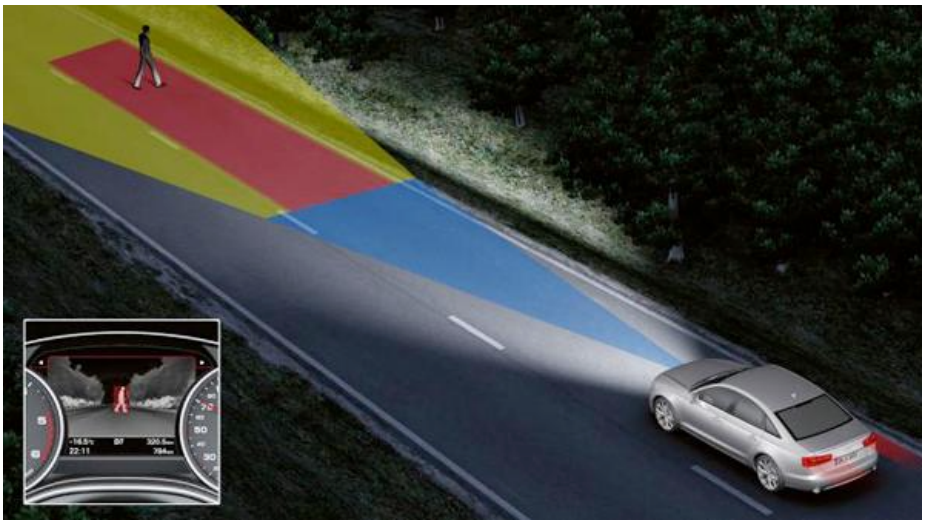

Thermal Imaging saves energy.

Seeing energy saves energy. The heat escaping from buildings is clearly low hanging fruit in the global mission to reduce energy usage. Our Department of Energy tells us nearly half of our total daily energy consumption in homes and commercial buildings is from heating or cooling which in turn represents a lion's share of the world's overall energy consumption. Thermal imaging is helping us to dramatically reduce the waste. A structural thermal survey, recommended by the DoE and mandated by our Euro-partners, finds the leaks that rob energy. Insulation deficiencies, poor weather stripping, and inadequate windows can easily be detected using a thermal imaging camera and thereby repaired.

By counting people in a room, a thermal imaging sensor can tune HVAC systems and save significant energy. Reducing heating/cooling of unoccupied areas will have a big effect on the world's energy appetite.

Incorporating appropriate optical filters and signal processing, a thermal infrared sensor can visualize natural gas. Leaking natural gas is an undesirable trifecta in today's society – a strong greenhouse gas, a dangerous and potentially explosive fire hazard, and, of course, a pricey wasted energy resource.

Thermal Imaging keeps us safe.
We all saw the capture of the Boston Bomber located by a helicopter mounted thermal camera while covered up by a tarp in the bottom of a parked boat.

Our security is improved by being able to detect intrusion especially at night using this technology. Police forces and local security companies are relying on the "people glow in the dark" nature of thermal imaging to provide protection and improve safety. With the recent dramatic cost reduction of this technology due to its adoption by the non-military world, thermal security cameras are now commonly installed to protect businesses and even residences. Whether a walk across a dark parking lot at night or why the dog is barking, a thermal camera can help keep us safe.

Thermal Imaging is making a better world.
Thermal imaging is another technology with global economic impact evolving from our military research– the next in line after commercial aircraft, computer chips, GPS, the Internet, and liquid crystal displays. The implications of thermal imaging are significant. Saving precious energy resources, dramatically improving preventative maintenance of high value equipment, crop monitoring of irrigation and fertilization from drones, security at night, food storage and preparation safety, and many other uses beyond contribute to a better tomorrow. Very low cost thermal imaging monitors are poised to be an important player in the Internet of Things. The positive impact of this technology on humanity is undeniable.

Thermal Imaging is a Global Technology
The thermal imaging industry itself will continue to generate billions in revenue providing jobs here in the United States, but only if we are not hamstrung in competing globally. Worldwide today, 9 out of 10 microbolometer thermal cameras are sold commercially. In 2019, just a few years away, that number will become 19 out of 20. [1] Global research investment from the commercial sector now far exceeds that of our military while worldwide microbolometer production capacity dwarfs any planned military deployment. Microbolometer arrays of commercial resolution and performance are currently being produced in foreign countries in both Europe and Asia and freely sold around the globe.

Restricting performance levels to less than foreign made devices (such as limiting picture updates to less than nine per second verses thirty of traditional television video) seriously handicaps US commercial suppliers competing in foreign markets. Foreign competitors are eager to make these differences very visible. Offered side by side next to more capable products of unconstrained offshore competitors in foreign marketplaces, *Made in the USA* is far less likely to be put in shopping carts.

---

[1] Uncooled Infrared Imaging Technology & Market Trends, Yole Development, July 2014.

On the flip side, incorporation of commercial microbolometer arrays and sensor assemblies into foreign military equipment will not be curtailed by tough export regulations. Within our boarders, fully capability (array size, frame rate, sensitivity, etc.) matchbox size thermal imagers hang on sales hooks in hardware, sporting goods, online, and big box stores across the country, some priced as low as a couple of hundred dollars and sold by the hundreds of thousands, eventually millions, produced by both foreign and domestic manufacturers. At this level of consumer and industrial proliferation, control becomes pointless.

Export policy needs to be visionary as technology is hardly static. Advancements in just one or two years are often dramatic. Waiting for foreign transfer of technology from research labs to production before making a protracted review of export regulations is akin to politely asking the rest of the world to take the lead. Without exportability, the economics just don't justify investment to keep ahead or even keep up. Commercial investment at home to develop the next "new and improved" will not occur until there is a dependable worldwide level playing field to compete.

ITAR can easily cripple our domestic capability. Today, readily accessible high volume semiconductor microelectronic manufacturers both here and abroad offer custom foundry services to produce wafers of silicon integrated circuits used as the starting substrate in the fabrication of microbolometer sensors. Placing ITAR on the design and production of silicon wafers designed for commercial (or military) microbolometer fabrication would be acknowledged by a "no-bid" from these manufacturers. Microbolometer silicon "readout integrated circuit" (ROIC) business volumes are minuscule compared to other traditional consumer, automotive, and industrial microelectronic production. Asking semiconductor companies to impose ITAR compliance on these very large and highly competitive production lines is unrealistic. Although today the technology level required for these devices can be fabricated by foundries domestically, as microbolometer technology progresses, more technologically advanced silicon fabrication will be necessary. Unfortunately, custom design foundry services for the most advanced production processes have moved to Asia - clearly a real pickle in developing future generations of advanced microbolometer sensors under ITAR.

There is foreign availability of these microbolometer silicon readout circuits (ROICs). Foreign IRFPA competitors have clearly demonstrated ROIC design capability – witness the current wide assortment of very capable IRFPAs offered by nations across the globe. This technology is publically well documented in published literature and patents. Foreign design houses accept contracts for new custom designs.

By encumbering export of microbolometer arrays, sensors, and cameras from the United States, our narrow technical leadership will be readily overtaken. Ironically, this results in looking to foreign supply to fill our military needs with the most advanced and economical technology. We only need to ask where the other electronic components in our tanks, ships, and aircraft are being produced. This country owes itself an unobstructed opportunity to compete worldwide in a technology that has such broad and compelling social and economic benefit.

July 6, 2015

Ms. Hillary Hess
Director
Regulatory Policy Division
Room 2099B
Bureau of Industry and Security
U.S. Department of Commerce
14th Street & Pennsylvania Ave., N.W.
Washington, D.C. 20230

Mr. Ed Peartree
Director
Office of Defense Trade Controls Policy
U.S. Department of State
2401 E Street, N.W.
Washington, D.C. 20037

Re: Revisions to the Export Administration Regulations (EAR): Control of Fire Control, Range Finder, Optical, and Guidance and Control Equipment the President Determines No Longer Warrant Control Under the United States Munitions List (USML) (*Federal Register* Notice of May 5, 2015; RIN 0694-AF75) and Amendment to the International Traffic in Arms Regulations: Revision of U.S. Munitions List Category XII (*Federal Register* Notice of May 5, 2015; RIN 1400-AD32)

Dear Ms. Hess and Mr. Peartree:

The Semiconductor Industry Association ("SIA") is the premier trade association representing the U.S. semiconductor industry. Founded in 1977 by five microelectronics pioneers, SIA unites over 60 companies that account for nearly 90 percent of American semiconductor production and the semiconductor industry accounts for a sizeable portion of U.S. exports.

SIA is pleased to submit the following public comments in response to the request for public comments issued by the Commerce Department's Bureau of Industry and Security ("BIS") on proposed revisions to the Export Administration Regulations ("EAR") pertaining to items the President determines no longer warrant control under United

States Munitions List ("USML") Category XII ("Proposed EAR Revisions"),[1] and revisions to the USML Category XII ("Proposed ITAR Revisions").[2]

I. Summary

As the notes to Category XII underscore, a clear and straightforward definition in the International Traffic in Arms Regulations (ITAR) of the term "directly related" is needed. SIA recommends a definition that closely adheres to the natural meaning of the words: "required and peculiarly responsible for the controlled features of the associated item." Such a definition could utilize the definition of "required" and "peculiarly responsible" as contained in the pending Commerce Department regulatory proposal. It should be construed in a manner at least consistent with the ITAR definition of "specially designed." Among other things, this would mean that software is not "directly related" to a defense article if the software has equivalent performance, characteristics or functionality to software that can be used in or with a civilian article.

The proposed revision to Export Control Classification Number ("ECCN") 6A002 stating that certain "space qualified" devices are subject to ITAR control runs directly counter to the overall thrust of the President's Export Control Reform Initiative ("ECRI"), as it would necessarily and without justification take items currently subject to EAR control and render them subject to ITAR control.

Classifying an unfinished civilian good as subject to ITAR control when the finished good is subject to EAR control is illogical and has serious adverse implications for semiconductor devices. The properties and capabilities of a focal plane array that is not in a "permanent encapsulated sensor assembly" are identical to those of a focal plane array that is in a "permanent encapsulated sensor assembly." Any distinction between those products is based purely on form, not substance, and for that reason should not affect national security sensitivities.

The proposed rule would prohibit exporters from using License Exception STA for any item covered by several different ECCNs. Licensing flexibility that is useful to industry should not be eliminated unless there is a compelling reason to do so.

II. Proposed ITAR Changes

A. Definition of "Directly Related"

No definition of the term "directly related" currently exists in the International Traffic in Arms Regulations ("ITAR"). Moreover, SIA is disappointed that no definition of

[1] Revisions to the Export Administration Regulations (EAR): Control of Fire Control, Range Finder, Optical, and Guidance and Control Equipment the President Determines No Longer Warrant Control Under the United States Munitions List (USML), 80 Fed. Reg. 25,798 (May 5, 2015) ("Proposed EAR Revisions").

[2] Amendment to the International Traffic in Arms Regulations: Revision of U.S. Munitions List Category XII, 80 Fed. Reg. 25,821 (May 5, 2015) ("Proposed ITAR Revisions").

that term has been proposed by the State Department in its harmonization proposal.[3] Given the importance of "directly related" in determining the types of technical data, software and defense services subject to ITAR control,[4] a definition of "directly related" within the ITAR has been sorely needed. A clear and straightforward definition of "directly related" should be promulgated that adheres closely to the natural meaning of the words, *i.e.*, "required and peculiarly responsible for the controlled features" of the associated item.

As part of the President's Export Control Reform Initiative ("ECRI"), several years of effort have gone into formulating a definition of "specially designed." While the "specially designed" definition applies throughout the Commerce Control List ("CCL") administered under the EAR, it is generally used with respect to hardware on the USML. For the same reason that a "specially designed" definition was needed to clarify ITAR controls on hardware, a counterpart and correlative definition of "directly related" -- an even more ambiguous and elastic term than "specially designed" -- is needed to clarify ITAR controls on technical data, software and services.

While the State Department is proposing a long overdue amendment to the controls on software (by making software a defense article, rather than technical data), "directly related" is likely to continue to play a significant role in determining controls on technical data, software and defense services. First, any technical data "directly related" to ITAR software will necessarily be "directly related" to a defense article and thus controlled. Second, the State Department has indicated that it will add catch-all categories covering software to various USML categories[5] and those new software catch-all categories likely will include "directly related" as a control criterion.

The term "directly related," is applied in the proposed rulemaking for USML Category XII. Specifically,

- In proposed Note 1 to paragraph (f) of USML Category XII, the State Department states that technical data and defense services "directly related" to various defense articles controlled in other paragraphs of USML Category XII "remain subject to the ITAR even if the technical data or defense services could also apply to items subject to the EAR."

- In proposed Note 2 to paragraph (f) of USML Category XII, the State Department states that software that converts a defense article into an item subject to the EAR or that converts an item subject to the EAR into a defense article is "directly related" to the defense article.

---

[3] International Traffic in Arms: Revisions to Definitions of Defense Services, Technical Data, and Public Domain; Definition of Product of Fundamental Research; Electronic Transmission and Storage of Technical Data; and Related Definitions, 80 Fed Reg. 31525 (Jun. 3, 2015) ("ITAR Harmonization Definitions")

[4] *See*, *e.g.*, Temporary Modification of Category XI of the United States Munitions List, 80 Fed. Reg. 37,974, 37,975 (Jul. 2, 2015).

[5] ITAR Harmonization Definitions at 31,527.

The scope attached to "directly related" in these proposed notes is detached from any plain meaning of the term.

The guidance provided in proposed Note 1 to paragraph (f) of USML Category XII indicates that technical data not "specially designed" for a defense article nonetheless is directly related to the defense article. Such an overly broad reach of "directly related" is misguided and does violence to the plain meaning of the term. If certain technical data apply equally to items subject to the EAR as to items subject to the ITAR, then the technical data necessarily, under the recently promulgated "specially designed" definition, are not "specially designed" for defense articles, and so should not be deemed "directly related" to any defense article. "Directly related" should not be taken to mean merely "capable of use with." Both the State and Commerce Departments explicitly repudiated the "capable of" standard in their definition of "specially designed."[6] That over-reaching standard should not be embedded in "directly related."

The guidance provided in proposed Note 2 to paragraph (f) of USML Category XII indicates that software is directly related to a defense article if the software converts the defense article into an item subject to the EAR. Software that converts a defense article into an item subject to the EAR necessarily infuses the article with characteristics that do not warrant control under the ITAR. Such software should not be deemed "directly related" to a defense article. "Directly related" as it pertains to software should at least have the limitations contained in the definition of "specially designed." Currently, software is subject to both terms, compounding the uncertainty and confusion.

A definition of "directly related" is needed in order to clarify the export control status of myriad technical data used in or with both defense articles and items subject to the EAR as well as with respect to software. A definition of "directly related" should be promulgated that adheres closely to the natural meaning of the words, *i.e.*, "required and peculiarly responsible for the controlled features" of the associated item. Both "required" and "peculiarly responsible" have commonly understood definitions among the exporting public and those commonly-understood definitions should apply in this context. Alternatively, those terms could be assigned meanings similar to those currently being proposed by the State and Commerce Departments.[7]

Software or technical data that is not peculiarly responsible for the controlled feature(s) of a defense article should not be deemed "directly related" to the defense article even if the software or technical data are used in the design and production of the defense article. For example, a semiconductor producer may receive a defense customer's own proprietary Read Only Memory ("ROM") software code that would be used to produce a specific or custom ROM-coded version of a commercial microcontroller for its defense

---

[6] Amendment to the International Traffic in Arms Regulations: Initial Implementation of Export Control Reform, 78 Fed. Reg. 22744 (Apr. 16, 2013); "Specially Designed: Definition, 77 Fed. Reg. 36410 (Jun. 19, 2012).

[7] Revisions to Definitions in the Export Administration Regulations, 80 Fed. Reg. 31,505, 31,519 (Jun. 3, 2015); ITAR Harmonization Definitions at 31,535-36

customer. Such custom ROM-coded microcontrollers are "specially designed" for the defense customer's ITAR-controlled equipment, and the customer's proprietary software ROM code should be deemed "directly related" to the customer's defense article because that software is peculiarly responsible for the controlled features of both the "specially designed" microcontrollers and the defense article. In contrast, other software or technical data used to produce the ROM-coded devices should not be considered "directly related" to those devices or the defense article because those other software and technical data, while used in the design and production of the custom ROM- coded devices, are not peculiarly responsible for the controlled feature of either the "specially designed" devices or the defense article. Instead, that other software and technical data relate to the commercial microcontroller underlying the ROM-coded device produced for the defense customer and so do not warrant designation as being "directly related" to a defense article. The only software that is directly related to the defense article (the ROM-coded microcontroller) in this example is the defense customer's proprietary software code.

Lastly, it should be made clear that software is not "directly related" to a defense article if the software has equivalent performance, characteristics or functionality to software that can be used in or with a civilian article. Such software is too broadly related to defense and civilian articles to be *directly* related to a defense article.

B. Proposed USML Category XII(c)(2)

As currently drafted, proposed USML Category XII(c)(2) will cover (among other things):

> {P}hoton detector, microbolometer detector, or multispectral detector infrared focal plane arrays (IRFPAs) having a peak response within the wavelength range exceeding 900 nm but not exceeding 30,000 nm and not integrated into a permanent encapsulated sensor assembly, and detector elements therefor.[8]

No limit is placed on the number of detector elements included in microbolometer IRFPAs covered by this proposed USML category. In contrast, proposed USML Category XII(c)(5), which pertains to microbolometer IRFPAs integrated into a permanent encapsulated sensor assembly, covers only those microbolometer IRFPAs having greater than 328,000 detector elements.[9]

Microbolometer IRFPAs with fewer than 328,000 detector elements commonly are being used in civilian end uses. In particular, original equipment manufacturers ("OEMs") are developing cameras to meet automotive manufacturers' ever-increasing demand for automotive systems that enhance driving safety, and such cameras frequently include microbolometer IRFPAs with fewer than 328,000 detector elements, but peak responses within the wavelength range between 900 nm and 30,000 nm. It would be inappropriate

[8] Proposed ITAR Revisions at 25,826.

[9] Id.

and counterproductive to U.S. economic competitiveness[10] for the State Department to impose ITAR controls on microbolometer IRFPAs that are used in civilian end uses. Moreover, there is no valid justification for the State Department to limit the scope of controls on microbolometer IRFPAs incorporated into permanent encapsulated sensor assemblies in a different manner than it limits the scope of controls on microbolometer IRFPAs not incorporated into permanent encapsulated sensor assemblies. The properties and capabilities of a focal plane array that is not in a permanent encapsulated sensor assembly are identical to those of a focal plane array that is in a permanent encapsulated sensor assembly. Any distinction between those products is based purely on form, not substance, and for that reason should not affect national security sensitivities.

Accordingly, the State Department should revise proposed USML Category XII(c)(2) as follows:

> {P}hoton detector, microbolometer detector, or multispectral detector infrared focal plane arrays (IRFPAs) having a peak response within the wavelength range exceeding 900 nm but not exceeding 30,000 nm **and greater than 328,000 detector elements,** and not integrated into a permanent encapsulated sensor assembly, and detector elements therefor

Such a revision would largely, if not entirely, eliminate the capture by this USML category of devices for civilian end uses, and so would comport with the stated intent of the U.S. government.

C. Proposed USML Category XII(c)(7)

As currently drafted, proposed USML Category XII(c)(7) will cover:

> Charge multiplication focal plane arrays having greater than 1,600 elements in any dimension and having a maximum radiant sensitivity exceeding 50 mA/W for any wavelength exceeding 760 nm but not exceeding 900 nm, and avalanche detectors therefor[11]

This level of control would sweep in image sensors that are incorporated in high volume civil applications such as automobile onboard day/night cameras for road safety, electronic toll collection for Intelligent Traffic Systems, digital pathology solutions in the medical field, scientific instruments used in astronomy and microscopy, and surveillance cameras used in parking lots or inside banks. As sensor prices continue to decline and complementary technologies (such as the "Internet of Things") increase the value of sensors, the volumes for these civil applications will increase exponentially.

---

[10] U.S. developers of microbolometers IRFPAs for automotive OEMs compete directly and intensely with European developers of microbolometers IRFPAs having the same characteristics and performance capabilities, none of which are subject to European military export controls.

[11] ITAR Revisions at 25826.

In addition, there is both foreign competition from image sensors meeting the proposed control parameters but not subject to similar controls, and competing technology that serves these markets but is not covered under the proposed control parameters.

Given the rapidly growing commercial applications for low light imaging sensors and alternative technologies in the market, charge multiplication focal plane arrays should remain on the EAR and not be moved to the ITAR. Alternatively, if charge multiple focal plane arrays are to be controlled in a new USML Category XII(c)(7), that USML category should be revised as follows:

> Charge multiplication focal plane arrays having ~~greater than 1,600 elements in any dimension and~~ ~~having~~ a maximum radiant sensitivity exceeding ~~50~~ **250**mA/W for any wavelength exceeding 760 nm but not exceeding 900 nm, **and average radiant sensitivity exceeding 175 mA/W within the same spectral region of interest** and avalanche detectors therefor

Such a revision would largely eliminate the capture by this USML category of devices for civilian end uses, and so would comport with the stated intent of the U.S. government.

III. Proposed EAR Changes

A. ECCN 6A002

1. Related Controls Note

Among the proposed revisions to Export Control Classification Number ("ECCN") 6A002 is a new *Related Controls* discussion, part (1) (b) of which states that "space qualified" solid-state detectors, "space qualified" imaging sensors and "space qualified cryocoolers defined in 6A002.a.1, 6A002.b.2.b.1 and 6A002.d.1, respectively, are subject to ITAR control.[12] That proposed change runs directly counter to the overall thrust of the President's Export Control Reform Initiative ("ECRI"), as it would necessarily and unambiguously take items currently subject to EAR control and render those items subject to ITAR control. No justification is provided for doing so.

To be clear, no modification is proposed to the definitions contained in 6A002.a.1, 6A002.b.2.b.1 and 6A002.d.1. Instead, items currently within those ECCNs would simply be moved to the ITAR. SIA understands that re-classifying products clearly and unambiguously subject to the EAR to the U.S. Munitions List ("USML") is contrary to the purpose of the ECRI.

[12] Proposed EAR Revisions at 25,811.

2. Note 3 to 6A002.a.3

Among the proposed revisions to 6A002.a.3 is a new Note 3 stating that non-"space qualified" focal plane arrays that are not in a "permanent encapsulated sensor assembly" subject to the EAR are "subject to the ITAR."[13] The term "permanent encapsulated sensor assembly" is defined as

> {A} permanent encapsulated sensor assembly (e.g. sealed enclosure, vacuum package) containing an infra-red focal plane array (IRFPA) that prevents direct access to the IRFPA, disassembly of the sensor assembly, and removal of the IRFPA without destruction or damage to the IRFPA.[14]

This proposed EAR revision would subject unfinished and semi-finished goods to ITAR control, notwithstanding that if the goods were finished they would not be subject to ITAR control.

This approach -- classifying an unfinished civilian good as subject to ITAR control when the finished good is subject to EAR control – is illogical and has serious adverse implications for semiconductor devices. As noted above, the properties and capabilities of a focal plane array that is not in a "permanent encapsulated sensor assembly" are identical to those of a focal plane array that is in a "permanent encapsulated sensor assembly." Any distinction between those products is based purely on form, not substance, and for that reason should not affect national security sensitivities.

Accordingly, BIS should remove Note 3 to ECCN 6A002.a.3.

B. License Exception STA

If implemented, the proposed rule would prohibit exporters from using License Exception STA for any item covered by several different ECCNs.[15] No justification is provided for this proposed limitation on the use of License Exception STA. Licensing flexibility that is useful to industry should not be eliminated unless there is a compelling reason to do so.

* * * * *

[13] Proposed EAR Revisions at 25,812.

[14] Proposed EAR Revisions at 25,810.

[15] EAR Revisions at 25,800-01, 25,809

SIA appreciates the opportunity to comment on the Proposed Revisions and looks forward to continuing its cooperation with the U.S. Government on export control reform. Please feel free to contact the undersigned or Joe Pasetti, Director of Government Affairs at SIA, if you have questions regarding these comments.

Cynthia Johnson

Mario R. Palacios

Cynthia Johnson
Co-Chair, SIA Export Control Committee

Mario R. Palacios
Co-Chair, SIA Export Control Committee

1 July 2015

Via DDTCPublicComments@state.gov
Via publiccomments@bis.doc.gov

U.S. Department of State
Directorate of Defense Trade Controls
Office of Defense Trade Controls Policy

U.S. Department of Commerce
Bureau of Industry and Security
Regulatory Policy Division

To Whom It May Concern:

The Sensors and Instrumentation Technical Advisory Committee (SITAC) hereby submits the following documentation in response to the Department of State's proposed rule, *Amendment to the International Traffic in Arms Regulations: Revision of U.S. Munitions List Category XII* (RIN 1400-AD32) and the Department of Commerce's proposed rule, *Revisions to the Export Administration Regulations (EAR): Control of Fire Control, Range Finder, Optical, and Guidance and Control Equipment the President Determines No Longer Warrant Control Under the United States Munitions List (USML)* (RIN 0694-AF75).

The SITAC has compiled this documentation over the years to demonstrate foreign availability and the scope of items in normal commercial use with respect to infrared detection. Based on this documentation and the comments submitted separately by companies with representation on the SITAC, we believe that the proposed rules regarding USML Category XII require significant structural revisions in order to fulfill the objectives of Export Control Reform and preserve the U.S. industrial base.

SITAC continues to be committed to assisting the USG Inter Agency Group with this essential collaboration effort in order to provide industry insights into technology evolution, market drivers, and the competitive landscape.

Best Regards,

Steven J. Tribble
SITAC Chair

Enclosures – SITAC Subcommittee Reports
- SWIR Devices and Cameras
- Cryocoolers
- Optics
- EMCCD Devices and Systems
- Lasers
- Readout Integrated Circuits (ROIC)

SITAC: SWIR Detectors and Cameras Subcommittee Recommendations

July 10, 2013

Executive Summary

Technology Background

Foreign Availability

Current Export Controls, Provisos and Known CJs

General Discussion

Appendices:

- Appendix 1: Foreign Available Sources of InGaAs Detectors and Cameras
- Appendix 2: Export-relevant SWIR Technology Definitions
- Appendix 3: SWIR Military and Civil Applications
- Appendix 4: Performance Metrics for 2D and 1D InGaAs Arrays

SITAC: SWIR Detectors and Cameras Subcommittee Recommendations

Executive Summary:

The SITAC SWIR Subcommittee reviewed export controls for a variety of SWIR imaging sensors and is providing the following recommendations pertaining specifically to those products based on InGaAs sensor technology.

1. The level of control for SWIR imaging technology needs to take into consideration military utility, Wassenaar Agreement levels of control and foreign available technology. Without serious consideration of all three, export controls may be too tight resulting in policy imposed on US companies that are far too restrictive and do not provide any additional protection to national security.
2. Levels of control need to be established based on figures of merit, features and specifications that can be determined clearly and easily be someone somewhat knowledgeable with the product group. We suggest that for InGaAs detectors and non-application specific cores/cameras, the following criteria would need to be considered to determine the jurisdiction of military and commercial products:
    - In order to remain competitive with high-production foreign sources, minimum sensitivity for commercial products should be reduced from 200 e- rms (for the most sensitive operating mode) to 100 e- rms for devices having detectors with pixel size 25µm. The noise floor for products having arrays of other pixel sizes, the temporal noise level is adjusted by the factor of the pixel area. Devices having better sensitivity would have additional export restrictions depending on the customer-type and location. For example, export license provisos for InGaAs cameras should have the following minimum noise floor:
        - For NATO & NATO+ MOD and Government Agencies (and emergency responders) - no noise floor restrictions.
        - For non MOD and Government agencies of NATO and NATO+ - not less than 100 e- rms.
        - Outside of NATO and NATO+, the - noise floor not less than 200 e- rms for all end user types.
    - Camera cores based on detectors having only a rolling-mode readout ROIC should be considered commercial and not military products.
    - Camera cores having more restrictive military controls would have conformal coated boards, and are qualified to pass MIL-SPEC-810G shock, vibration and temperature cycling for gun-mount or airborne qualified environments and temperature ranges.
    - Low SWaP camera modules with size smaller than 32 x 32 x 32 mm, and weight less than 100 g, and total power at operating temperature below 2 W should be treated as military products. Larger SWaP camera modules with sensitivity in line with the area/noise ratio of 6.25 or less would be considered commercial products.
    - As low D*, high dark currents and poor uniformity, even at cooled temperatures, limit effective use of Extended InGaAs for wavelengths beyond the natural cutoff of standard

'lattice matched' InGaAs, Extended InGaAs FPAs and camera modules with them should be treated as commercial products since military applications are unlikely.

3. Non-space qualified camera modules or higher level assemblies with 1-D arrays of square or tall pixels, but with limited noise floors above 100 e- rms for square pixels should be treated commercial products.
4. Application-specific cameras and higher level assemblies for scientific, medical or industrial applications which require external power, external displays and/or computer control or image processing, would be controlled as commercial products.
5. For those products based on SWIR technology that was funded by the US government for military purposes, these should be considered military products independent of the above criteria for a limited time of 3 years before the criteria alone determines their jurisdiction.

Technology Background:

This report focuses on imaging sensor modules that have peak photon responsivity within the wavelengths of 0.9 to 2.5 microns, which can be referred to as the Short-Wave Infrared (SWIR). The primary sensing element of such modules usually consist of a photodiode array (PDA) layer made with Indium Gallium Arsenide (InGaAs), Germanium, or Mercury Cadmium Telluride (referred to as MCT or HgCdTe), though different formulations of those materials may only cover part or all of the full SWIR range listed above but in each case with performance tradeoffs. The PDA converts the received photons into electrons at a rate known as Quantum Efficiency (QE), a rate that varies across all wavelengths but is usually specified as exceeding a certain % over the materials' nominal response range. The PDA is then hybridized with a Readout Integrated Circuit (ROIC) to make the Focal Plane Array (FPA). The ROIC provides the means to convert the flow of electrons output by the PDA into measureable signals per unit time. The combination of the PDA and ROIC must be designed together to define:

- fundamental array organization (1- or 2 dimensional: 1-D or 2-D),
- pixel pitch (10 to 40 micron pitches currently available)
- image format (# of rows and columns – 320x240, 320x256, 640x512, 1280x1024, 1x256, 1x512, 1x1024, 1x2048 currently available in InGaAs)
- PDA to ROIC interconnect (method of hybridization: generally bump-bond in 2-D, wirebond in 1-D),
- ROIC pixel unit cell design (detector bias, integration method, sampling method, amplification, full well capacity),
- readout architecture (how the individual diode signals are multiplexed together and transmitted to the external camera electronics).

Most current FPA designs require external camera electronics to provide control (of gain, integration time, biases for a variety of operating modes), synchronization/timing signals, digitization, non-uniformity correction (both dark and amplifier fixed pattern noise), output formatting (standard video in EIA-170, CCIR, NTSC, PAL, SDI, HDMI formats, or digital video for computer processing via Camera Link, USB, Ethernet or CoaXpress digital interfaces). Increased integration of digital with analog circuitry may lead to completely self-contained FPAs for volume applications: NIT (France), for example, has an FPA capable of integrating external analog video timing signals to output composite video directly (though an external buffer amplifier is recommended), for automotive applications. However, even in this case, and for all other cases, core camera electronics are needed to make a complete imaging device capable of capturing and transmitting to external image display, capture or recording devices. These cores may be offered with just proprietary digital interfaces accessed over a ribbon cable, or industry standard interfaces and I/O connectors. They may also be offered with open mechanical structures for easier integration into larger systems, or with enclosures to provide robust shielding for EMI and RFI emissions reasons and for ESD protection. All such variations are still essentially camera cores, as they require the addition of other system elements to be powered on, to have scenes or spectra focused onto their sensors, and to display or record imagery or spectra.

Foreign Availability:

Current controls on US-made IRFPAs are tight, with each 2-D camera core or 2-D FPA export, even demonstrations, requiring an end user license. The effect of those controls over the past decade have convinced international customers to develop non-US sources for SWIR ROICs, FPAs, and camera cores, such as **Xenics** (Belgium , a spin-off of the consortium IMEC (Interuniversity Microelectronics Centre), **sInfraRed** (Singapore – owned by Xenics for low cost fab, development and Asian sales), the Alcatel-Thales **III-V fab** (France) , now owned by Sofradir (France), **New Imaging Technologies** (France – high dynamic range InGaAs ROICs), **New Infrared Technologies** (Spain – PtSi with 1 to 5 um range), **ChungHwa/Leading-Light** (Taiwan), **Semiconductor Devices** (SCD – Israel), and **Mikro-Tasarım** (Turkey – megapixel ROICs with 12.5 um pitch for InGaAs). (See also Appendix 1a International Sources of SWIR FPAs).

Organizations in China have published papers at SPIE conferences discussing development of area array InGaAs detectors, such as **China Electronics Technology Group Corp.** (2009 – 320x256x25µm http://proceedings.spiedigitallibrary.org/proceeding.aspx?articleid=1339863) and **Shanghai Institute of Technical Physics** (China) working with **Vision Engineering Ltd**. (China – 2012 – 640x512x25µm - http://proceedings.spiedigitallibrary.org/proceeding.aspx?articleid=1477037) .

In addition to camera modules built by most of the above FPA developers, a number of global companies purchase FPAs from these or US manufacturers to create their own camera modules, either for sale as standalone cameras or for integration into higher level assemblies or systems. (See also Appendix 1b International Sources of SWIR Cores/Cameras).

Current Export Controls, Provisos and Known CJs:

Currently, the USML Category XIIc states the following that captures InGaAs detectors, cores and cameras:

"Military second and third generation image Intensification tubes and military infrared focal plane arrays identified in this subparagraph are licensed by the Department of Commerce (ECCN 6A002A and 6A003A)) when part of a commercial system (i.e., those systems originally designed for commercial use)."

US exporters of SWIR products have experienced the following interpretations of the above (communicated through personal CJs and license provisos):

1) It seems that export control policy makers strongly discourage industry from "self-declaring" using the above carve-out. They recommend that prospective exporters submit a CJ on the "commercial system".
2) Exporters are encouraged to incorporate tamper-proofing to ensure the FPA cannot be removed and repurposed.
3) Export licenses for InGaAs cameras have provisos for the noise floor depending on the customer type:
    a. For NATO & NATO+ MOD and Government Agencies (and emergency responders) - "No" noise floor restrictions.
    b. For non MOD and Government agencies of NATO and NATO+ - not less than 200 electrons.
    c. Outside of NATO and NATO+, the - noise floor not less than 400 electrons for all end user types.

Some makers of 2-D SWIR FPAs and makers of most 1-D SWIR FPAs sell their FPAs as component devices to camera or spectrometer manufacturers to make camera cores or higher level assemblies, however, most 2-D SWIR FPAs are only sold as part of camera core assemblies. All SWIR 2-D FPAs and camera modules are currently believed to be controlled as USML Category 12(c), except for the following published Commodity Jurisdiction listings:

Princeton Instruments	PIoNIR: 640: Thermoelectrically Deep-Cooled NIR imaging and spectroscopy system (frame rates to 110 fps).	ECCN 6A003.b.4.a.	11/10/2011
InView Technology Corporation	The camera is a short wave infrared camera. 1024x768 pixels and a TE cooled InGaAs sensor element based on compressive processing, which slows image capture to under 10 fps.	ECCN 6A003.b.4.a	07/19/2012
DCG Systems, Inc.	HgCdTe and InGaAs 256x256 and InGaAs 1024x1024 cameras and photo-emission systems built around those cameras. (slow frame rate)	ECCN 6A003.6.4	06/06/2012
Princeton Lightwave, Inc.	6000 Element Shortwave Infrared Linear Imaging Sensor (InGaAs) Installed in cameras for earth resource monitoring (for an Indian Satellite program)	ECCN 6A002.a.l.c	08/04/2011
Teledyne Judson Technologies in the U.S. and Teledyne DALSA in	1-Dimensional Industrial Infrared Linescan Cameras in 1K (1024), 2K (2048) & 4K (4096) Formats (InGaAs –	ECCN 6A003.b.4	02/10/2012

Canada	not currently advertised for sale)		
Infrared Laboratories, Inc.	IREM-III Emission Microscope for Failure Analysis (InGaAs – low frame rate)	ECCN 6A003.b.4	03/07/2013
Specim Spectral Imaging Oy Ltd., Oulu, Finland	AisaDual Visible-Near Infrared (VNIR) and Short Wave Infrared (SWIR) Hyperspectral Sensor System (Includes Xenics 320x256 InGaAs camera)	ECCN 6A003.b.4.a	05/24/2011
Wasatch Photonics, Inc.	Hyperspectral System, .45-2.5 micrometer 140029-ASY. This hyperspectral imaging unit provides imaging data across the spectral range of 450nm to 2,500nm. (unknown content – not currently advertised)	ECCN 3A999.f	11/09/2012

Source: http://pmddtc.state.gov/commodity_jurisdiction/determination.html with searches for InGaAs, SWIR, Infrared, Hyperspectral, or company names. Web site only provides information on CJs since 2010. Applicants can withhold permission for publication of CJ determinations, so the above listing does not include all SWIR CJs. As an example, the Rice Camera web site currently lists an Exportable 640x512 camera, but provides no details (http://www.ricecamera.com/Products---Services/Machine-Vision-Cameras/SWIR/Exportable-SWIR-Camera.aspx).

The reference of 200 e- rms system noise is a typical proviso experienced by exporters used in license applications for a 25 x 25 micron pixel. For other pixel sizes, the change in photon collection area for the same exposure time has an impact on equivalent sensitivity (NEI). So NVL came up with using the ratio of the pixel area / the temporal noise. Since the area of a 25 um pitch pixel is 625 sq um, and the provisos have used 200 e- rms as a proxy for the nighttime conditions they are worried about, the pixel size independent metric is 625/200, or 3.125 to one. If that metric is applied to a 20 x 20 micron pixel, we would divide 400/3.125 to find that the equivalent noise floor for that pixel is 128 e- rms. That is, if the camera electronics for a 20 um pitch camera achieve a noise floor of 128 e-, it is not more sensitive than a 25 um pitch camera with 200 e- system noise floor.

General Discussion:

For civil, homeland security and military applications, the basic camera module has similar functions and overlapping performance specifications. For the safety of US forces and the effectiveness of US operations, cameras with performance specifications key to successful US operational missions are controlled under ITAR by listing such camera modules on the USML under Category 12(c). However, it is the view of the SITAC sub-committee on SWIR that there are versions of these camera modules which won't compromise US missions, but will help US manufacturers compete with the foreign competitors. The foreign availability already demonstrates that current export controls on US made FPAs and camera cores have not prevented or curtailed global access to the technology. Helping US companies generate global sales by easing the licensing restrictions on cameras with little potential to be used by hostile forces, will help defray the infrastructure costs of SWIR FPA manufacture and therefore lower the costs of modules for US Government purchases. And, for those commercial products, if tamper-proofing is an important requirement, it needs to be clarified so that industry can design products appropriately.

As technology continues to evolve, the ability of export license regulations to prevent access to SWIR technology weakens and becomes counter-productive. Even technology developments funded by the US Government, and thus fitting the phrase 'specially designed for military', at some point becomes commonplace. The committee agrees that military (USML) controls are required for newly developed technologies that provide a measure of tactical or strategic advantage. The challenge is that unduly long and limiting export controls eventually serve to defeat that purpose, drive up DoD procurement costs, and can even put our armed forces at risk. Once a technology is older than three years or significant overseas availability arises, these technologies should transfer from the USML to the CCL. Wherever there might be a concern about an export the EAR export license application under the appropriate ECCN classification gives the relevant agencies a chance to prevent risky exports. A sunset policy to USML listings of infrared imaging technology would allow significant controls while minimizing the completive disadvantage US businesses face when competing with global competitors that advertise freedom from US ITAR controls.

Appendix 1a International Sources of SWIR FPAs

FPAs

Vendor	Country	Material	Product	Format	Pitch	Noise in most sensitive configuration	Note
Chunghwa Leading Photonics Technology	Taiwan	InGaAs	Large FPA	640 x 512	25 µm	5E11 Jones @ 16 ms implies 2500 e at 70% QE	
Chunghwa Leading Photonics Technology	Taiwan	InGaAs	Small FPA	320 x 256	30 µm	5E11 Jones @ 16 ms implies 3000 e at 70% QE	
FLIR/Indigo+Aerius	US	InGaAs					
Hamamatsu Photonics, K.K	Japan	InGaAs					Line Scan Cameras;FPA;Linear Arrays
Mikro-Tasarim Ltd.	Turkey	InGaAs	MT6415CA ROIC	640 x 512	15 µm	5 e readout, probably ROIC only	2-D ROICS - has InGaAs demo camera, CTIA
New Infrared Technologies	Spain	PbSe					Area Cameras;FPA;Linear Arrays
New Infrared Technologies	Spain	PbSe		320 x 256	25 µm		
New Infrared Technologies	Spain	PbSe	TACHYON 6400 FPA	80 x 80	130µm	VPD PbSe	Up to 2000 fps readout/uncooled
Raytheon	US	InGaAs, MCT					
SemiConductor Devices (SCD)	Israel	InGaAs	InGaAs Digital Detector	640 x 512	15 µm	45 e at 20 °C, 0.2 ms 81 e at 20 °C, 32 ms	
SOFRADIR	France	InGaAs		640x512 320x256			0.9-1.7µm
SOFRADIR	France	MCT	SATURN SW	1000 x 256			0.8 - 2.5 microns
UTC/Sensors Unlimited	US	InGaAs					
Xenics	Belgium	InGaAs	XFPA-1.7-640-LN2	640 x 512	20 µm	20 e readout at 77 K	Cyro SFD

Appendix 1b International Sources of SWIR Cores/Cameras

FPA or Core/Came	Vendor	Country	Material	Note
Core	Allied Vision Technologies GmbH/VDS Vosskuhler	Germany	InGaAs	Area Cameras
Core	Artray Co., LTD.	Japan	InGaAs	Area Cameras
Cores	Defense Vision Systems Inc.	UK	InGaAs	Area Cameras
Cores	EHD Imaging GmbH	Germany	InGaAs	Area Cameras
Cores	EVK	AUSTRIA	InGaAs	Systems
Cores	EVK	AUSTRIA	MCT	Systems
Cores	FLIR/Indigo+Aerius	US	InGaAs	
Cores	Hamamatsu Systems Division	Japan	InGaAs	Area Cameras;Line Scan Cameras;Systems
SubSystems	High Finesse GmbH	Germany	InGaAs	Area Cameras;Linear Arrays;Systems
SubSystems	KHS Instruments	Germany	InGaAs	Line Scan Cameras
Cores	Mikro-Tasarim Ltd.	Turkey	InGaAs	
Cores	New Imaging Technologies	France	InGaAs	Area Cameras
Cores	New Infrared Technologies	Spain	PbSe	Area Cameras;FPA;Linear Arrays
SubSystems	NEXVISION SAS	France	InGaAs	Area Cameras
SubSystems	NikkoIA SAS	France	InGaAs	
SubSystems	Photon, Etc	Canada	InGaAs	MCT-SWIR Area Cameras
Core	Photonic Science	UK	InGaAs	Area Cameras
Core	Photonic Science	UK	InGaAs	Area Cameras
Core	Raptor Photonics	Northern Ireland	InGaAs	Area Cameras
Cores	Raytheon	US	InGaAs, MCT	
Cores	SemiConductor Devices (SCD)	IL	InGaAs, MCT	Area Cameras
Core	Teledyne		InGaAs	
Cores	UTC/Sensors Unlimited	US	InGaAs	Area Cameras
Cores	VDS Vosskuhler	Germany	InGaAs	Area Cameras
Core	Xenics	Belgium	InGaAs	No spec tab on web
Core	Xenics	Belgium	InGaAs	Line Scan - TE Cooled

Appendix 2: Export-relevant SWIR Technology Definitions

A basic infrared ReadOut Integrated Circuit (ROIC) is an silicon CMOS integrated circuit designed to:

- Mate or hybridize with a detector array of sensors that convert infrared electromagnetic energy into electrical charges, such as a PIN photo-diode array, quantum dot array, or micro-bolometer, Note that because the detectors for the infrared are made from different materials than silicon, it is not possible to make monolithic detector/readout integrated circuits, such as used in visible and NIR sensors. Also note that CCD structures, where signals are shifted noiselessly across the surface of the image array, are not possible in infrared detectors.
- Accumulate the electrical charge into a measurable signal per unit time via a read cell (the combination of the sensor and ROIC read cell is also-known-as [aka] a pixel);
- Provide signal shaping, gain control, bandwidth control and sensor bias voltages to optimize measurement performance for multiple modes of operation that may be needed to serve a variety of applications;
- Provide sampling and timing circuits to multiplex the signals from the many individual sensors to be readout to external support electronics via a common signal path or paths (for parallel processing);
- Provide I/O circuitry to follow master control and timing signals from the external support electronics, while minimizing the number of external lines.

An advanced ROIC may add:

- Circuitry to minimize fixed pattern offset and gain differences between individual sensors, or between the ROIC read cells (non-uniformity correction is usually done external to the FPA)
- Digital convertors to enable the output of digital measurement values
- Circuits to permit smart adaptation of the ROIC to changing conditions or to application requirements (controls determined and applied by camera electronics)
- Algorithms or circuit modifications to significantly increase intra-scenic dynamic range via multiple sample periods, logarithmic amplifiers or other methods
- High-speed timing circuits to measure signal arrival time differences for each sensor instead of or in-addition to signal intensity
- Circuitry to bias and control high-bias voltages for avalanche photodiodes for range-gating, LADAR imaging, or ultra-low light level detection in passive illumination
- Circuitry to implement pseudo-time-delay-integration (TDI)

Fundamental design characteristics separating one FPA/camera module design from another:

- **Imager format:** the number of rows and columns in the FPA on a repeating pitch dimension. The combination of pitch and format dictate the imager size, and when combined with lens optics, determine the imager field of view (FOV) and resolution.
  Two major format classes with current or future examples are:
  - 2-D (aka: area or matrix of columns and rows) such as 160x120, 320x240, 320x256, 640x480, 640x512, 1280x1024, 1280x720, 1920x1080. Pitch ranges from 5 to 60 square microns

        - Military interested in large field of view (FOV) for context with fine pixel resolution to permit digital zoom to resolve hostile intent from distances of 0.1 to 20 km; can also be interested in largest pixel size for passive illumination sensitivity.
        - Commercial interest in high-resolution and field of view for SWIR microscopy for silicon IC and MEMs wafer inspection, bio-logical imaging at key wavelengths, high-spatial and wavelength hyperspectral imaging. VGA resolution satisfactory for most uses, with some use of quarter-VGA for economy. However, VGA and 1280 resolutions required for many.

    - 1-D (aka: line or strip arrays of 1) such as 128x1, 256x1, 512x1, 1024x1, 2048x1, 4096x1 or 8192x1. Pitch ranges from 10 to 50 microns.
        - Military has limited interest in 1-D arrays as sensitivity limited (several times less than area cameras). To build an image of an equivalent FOV as an area camera captures in 1/30th of a second takes many times longer (by the number of lines in the virtual image if the same exposure time is used) for the 1-D camera limiting usefulness for most military missions. Some potential to use 1-D arrays in airborne 'pushbroom' imaging. 1-D arrays with square imaging pixels are currently restricted on the CCL for this purpose while tall imaging pixel types are EAR99.
        - Commercial uses are for primarily for spectroscopy, which requires the pixel height to be 10 to 21 times the pixel pitch for maximum sensitivity. The larger pixel and need to design for large full well capacities for shot noise limited signal capture dictates the use of larger integration capacitors than used for area cameras, making the 1-D arrays less sensitive than 2-D arrays due to a higher read noise. As the market for 1-D arrays is limited, the same ROIC design is used for both tall and square pixels.

          Commercial machine vision applications for SWIR square pixel 1-D arrays are for inspection of hot hollow-bottles, metal coatings, agricultural products, paper products for moisture uniformity, recycled plastics and pharmaceutical products.

- **Readout type:** The design of ROIC pixel integration and readout operation architecture can vary in several respects. The design can either be rolling mode or snapshot mode, with either type including options for multiple taps, random access or integrate-then-read functionality.
    - **Rolling mode**, where readout of a line starts the integration for the next frame. This imposes a time skew from the top to the bottom of the image that is detrimental to imaging moving objects or pulsed illumination
        - Military interests are limited as no operational advantage over snapshot mode.
        - Commercial: Many microscopic inspection applications and art reflectography are compatible with rolling mode readout operation
    - **Snapshot mode**, where all pixels start and stop integration simultaneously

        - Military missions are usually from mobile platforms, image mobile targets, use pulsed illumination, or may need to capture encoded light flashes, and thus prefer snapshot ROICs/FPAs
        - Commercial applications include machine vision of moving product, automotive HOV lane imaging, scientific pump/probe laser imaging
    - **Multiple tap** (output) for reading portions of the array in parallel to increase full-image-frame readout rates (can be either rolling or snapshot) while limiting pixel readout bandwidth for lower noise; advanced ROICs may include ADC (digitizers) per column or sets of columns for this purpose. Note that most 2-D ROIC designs include 1-4 taps capability and the camera electronics designer chooses whether to provide ADCs for each tap.
        - Military missions that need high frame rates for fast servo control of communications laser trackers, fast target trackers, adaptive optics guide star trackers, etc., or to provide wide FOV to helmet mounted viewers during rapid head movements, will require the fastest frame rate cameras
        - Commercial applications for SWIR 2-D cameras rarely need higher than video frame rates. SWIR 1-D bio-medical imaging cameras require line rates of >100,000 fps with high resolution pixel arrays (>= 2048 pixels) to freeze patient movements. A related 2-D application that is developing will need >1 million pixel cameras with frame rates > 100 fps but at low gain. This will need ROICs with multiple taps.
    - **Random access** switching to readout one or more regions of interest (ROI). When data flows through a single or small number of ADCs (whether in the external electronics or within the ROIC) at a fixed pixel rate, the frame rate of the ROI goes up. A common feature of current designs.
        - Military missions use this common feature to may enable fast tracking of communications lasers, guide stars, or missiles from fixed or mobile platforms.
        - Some commercial communications laser tracking and adaptive optics imaging may use this feature.
    - **Integrate-then-read** circuits add sampling circuitry to transfer signals from the pixel integration element to an intermediate stage to permit start of integration for image frame 'n+1' while readout of image frame 'n' proceeds. This minimizes dead time between frames. This design feature is standard in most 1-D and 2-D SWIR ROICs on the market, except for older 1-D devices. Both commercial and military applications prefer this capability to minimize dead time between images.
    - **Correlated double sampling (CDS)** is an optional feature used when a reset switch is used to initialize the voltage across the integration capacitor prior to a new measurement. When the switch opens, the voltage across the capacitor will settle to a random value. CDS samples the value at the beginning of the exposure period and that value is then subtracted from a second sample taken at the end of the exposure period. CDS is used on all SWIR CTIA designs unless the exposure period is very short.

- **Sensor materials**, their associated wavelength ranges and sensor conversion types.
  The material governs the detection wavelength range, with variations of material preparation, formulation and illumination direction (front or back-illumination) limiting response to a subset of the maximum range shown in the table below. The D* (detectivity), dark current generation as a function of sensor temperature, and transducer type require significant differences in the readout unit cell design. This limits the ability of one ROIC design to serve different material and transducer types, particularly when optimizing performance for specific applications. Examples of sensor materials and transducer types, with associated maximum wavelength response ranges are shown in the table:

Material type	Transducer type	Max. Spectral range (µm)	Wavenumber (cm-1)
Indium gallium arsenide (Lattice Matched – front illuminated)	photodiode	0.7–1.68	14300–5950
Indium gallium arsenide (Lattice Matched – back illuminated)	photodiode	0.98 – 1.68	10200–5950
Indium gallium arsenide (Lattice Matched – thinned back illuminated)	photodiode	0.7 – 1.68 0.4 – 1.68	14300–5950 25000–5950
Extended Indium gallium arsenide	photodiode	1 – 2.2 1.1-2.6	10000–4550 9090-3800
Germanium (Ge)	photodiode	0.8–1.7	12500–5900
Lead sulfide (PbS)	photoconductive	1–3.2	10000–3200
Lead selenide (PbSe)	photoconductive	1.5–5.2	6700–1900
Indium antimonide (InSb)	photoconductive	1–6.7	10000–1500
Indium arsenide (InAs)	photovoltaic	1–3.8	10000–2600
Platinum silicide (PtSi)	photovoltaic	1–5	10000–2000
Indium antimonide (InSb)	photodiode	1–5.5	10000–1800
Mercury cadmium telluride (MCT, HgCdTe)	photoconductive	0.8–25	12500–400
Lithium tantalate (LiTaO3)	pyroelectric	The range of pyroelectric detector is determined by the window materials used in their construction.	
Triglycine sulfate (TGS and DTGS)	pyroelectric		

Source: http://en.wikipedia.org/wiki/Infrared_detector

The relative D* (measure of Detectivity) of the materials with SWIR response at specific operating temperatures, are illustrated in the chart below (copied from the Hamamatsu Solid State Corp., Technical Information SD-12, Characteristics and Use of Infrared Detectors)·

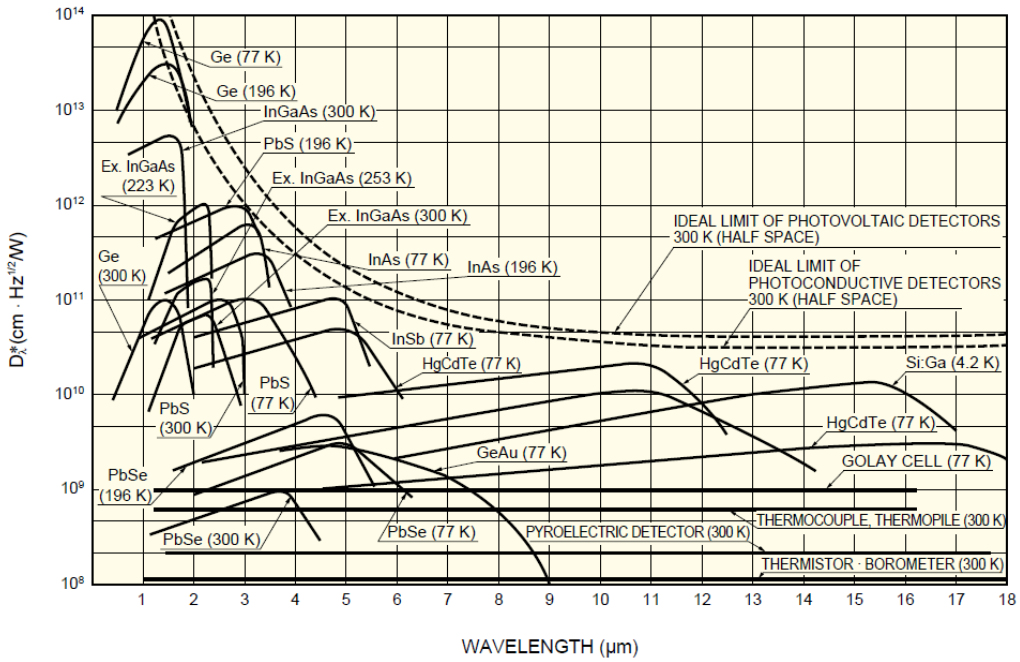

The above chart illustrates that Extended $In_{(82)}Ga_{(18)}As$, with a wavelength cutoff of ~2.5 µm, even when cooled to -50 °C, has 1/5th the D* of standard uncooled $In_{(53)}Ga_{(47)}As$. With both types at room temperature, extended has 1/75th the D* of the standard material where the InGaAs detector crystal is matched to the lattice constant of the substrate material InP. Extended InGaAs with In:Ga ratios between that of 53:47 and 82:18 are all greatly poorer D* then standard InGaAs as many growth steps to gradually adjust the crystal strain for non-matched This demonstrates that extended InGaAs has far less sensitivity than standard uncooled InGaAs, and need not be controlled as USML, particularly for its current use with 1-D arrays. ChungHwa currently offers a 320x256 pixel array with extended cutoff of 2.2, which is $In_{(74)}Ga_{(26)}As$ material, but the higher dark current, lower D*and thin-film non-uniformity of extended InGaAs detectors limits imaging applications to applications like laser beam profile, even with significant cooling.

- **ROIC pixel unit-cell design type:** The circuit receiving the signal from the sensor array must be a good match both the sensor material type and the application requirements to achieve the best performance. The unit-cell provides detector bias, signal shaping, signal quantification, and signal transfer to subsequent stages, while striving for low noise, low power consumption, high linearity across the range of photon flux levels experienced in the application, and wide dynamic range, while serving applications with a wide range of timing requirements. Factors like material dark current, FPA operating temperature range, resistivity, sensor pixel capacitance, interconnect impedance, along with associated noise sources influence the choice of unit-cell design type. By itself, unit cell design is independent of military or civil applications. Common designs include (source of information: http://trs-new.jpl.nasa.gov/dspace/bitstream/2014/35593/1/93-1313.pdf):
    - Source follower

- Direct injection and buffered direct injection (DI and BDI)
- Gate modulated and buffered gate modulated (GMOD and BIGM)
- Cascode Amplifier
- Capacitance Transimpedance Amplifier (CTIA)

- **Radiation hardening:** Silicon IC performance is subject to degradation if exposed to radiation damage, a hazard that may result from space missions with long dwell times in proximity to planetary radiation belts, the sun, or for terrestrial missions in nuclear power stations. Fabrication of the ROICs and other ICs must be made in special foundries and by following special design rules in order to minimize the degradation. This is known as radiation hardening. Generally, this capability is unique to military needs, though may be of use to civil satellite weather and crop health applications.

Appendix 3: SWIR Military and Civil Applications

The applications for SWIR imaging detectors cover a variety of tasks, with many common performance requirements and some differences between civil and military or national security applications. This section will summarize the applications for each type of user.

- **Military:** US Government organizations are interested in 2-D InGaAs or SWIR-MCT sensor arrays for day through night imaging of battlefield targeting lasers, range-finders, and guide stars, including those with eye-safe higher power wavelengths at 1.31 and 1.55 µm, and also for covert illumination at those wavelengths. As many of the lasers are pulsed for power or signaling purposes, snapshot readout technology is required over rolling mode readouts, and fast full-frame display rates (>100 fps for VGA) or even faster for smaller regions of interest (>4,300 fps for a window of 32 x 32 pixels). General surveillance with or without covert illumination over continuous day/night operation can be used for force perimeter, and driver situational awareness. This requires camera system temporal noise floor levels of <100 e- rms. SWIR camera cores and higher level systems can be used for seeing through haze at long distances, seeing through light fog, dust and smoke that obscure vision for shorter wavelength cameras, detecting some types of camouflage in various conditions. There is increasing interest in fusion of SWIR imagery with other wavelength band imagers (LWIR, MWIR or visible color) to identify items detected by thermal cameras, or to better detect chemical signatures associated with munitions or IEDs, or to image while LWIR detection may be limited by thermal transition of the ambient temperatures from day to night or night to day. Multi-spectral and hyperspectral imaging within one detector's wavelength range, also for chemical signatures, is a developing technology with potential military applications.

  Most military applications require robust, self-contained hardware (camera, display, controls, and controls for man-portable cases) that meet MIL-SPEC reliability testing specifications for shock, vibration, exposure to moisture, dust, fungus, and easy to use with gloves, helmets and/or rifles. To achieve maximum environmental robustness for military applications, module designs specify conformal coated boards. Helmet, or rifle mount and small UAV applications have additional requirements for very small size (< 32 x 32 x 32 mm), ultra-light weight (< 100 g without lens) and low-power consumption (<2 W).

  Military uses for SWIR 1-D arrays are limited as current technology makes InGaAs 1-D arrays far less sensitive than 2-D arrays, primarily due to the photodiode size (with its associated capacitance) and need for the typical absorbance spectroscopy applications to use much larger CTIA integration capacitances. This is because this application for 1-D arrays takes advantage of the resulting larger full-well capacity to discern small changes in high light levels needed to resolve small variations in chemical concentrations. Typical read-noise levels for 1-D arrays are 800 e- rms for 1024 pixel x 25-micron pitch x 500-or 25-micron tall pixel arrays, or 250 e- rms for a new 2048 pixel x 10 micron x 210-micron tall pixel array, in contrast to the 200 e- rms level frequently imposed as a sensitivity limit proviso for many approved ITAR export licenses for 2-D arrays. Given the lower sensitivity, 1-D exposure times have to be longer than for a 2-D array or camera

modules for the same photon flux. To acquire a 2-D image of 512 rows of a scene at a sensitive exposure time of 32 ms will take 512 times the time it would take a video rate VGA camera module, or over 16 seconds. For capture of pulsed battlefield lasers, a scanned 1-D array would rarely capture the signal. A developing homeland security application for a handheld Raman spectrometer to identify explosive components mixed with organic materials as a disguise. This will used 1-D arrays integrated with spectrometers, laser Raman source, and laser blocking notch filter.

Current CCL classifications define a non-space qualified InGaAs 1-D array with a pixel aspect ratio of >3.8: 1 (pixel aperture or height over 3.8 times the pixel width) as EAR99, and pixel designs whose aspect ratio is below that ratio as exportable under EAR with the designation of ECCN 6A003. a.3.d.2.a. The controlled usage would be for airborne 'pushbroom' surveillance. All space qualified 1-D arrays with peak response between 1200 and 30,000 nm, of any aspect ratio are designated 6A003.a.1.c for similar reasons.

- **Civil:** Commercial interests in SWIR are for spectroscopy, spectral contrast on materials due to absorbance molecular vibrations for machine vision inspection and sorting, many times mounted on a microscope to inspect inside integrated circuits or MEMs devices, direct imaging in silicon blocks or ingots, for biomedical imaging in tissue using spectral interferometry techniques, imaging defects inside hot glass, civil auto and truck vision enhancement, business jet pilot vision enhancement, port security and management in conditions of haze and light fog, with growing interest in hyperspectral imaging of agricultural growing fields.

  The normal applications are for use in scientific lab or industrial settings, where the camera module is plugged into wall AC to DC supply, and the camera output is wired to external video displays or PCs via industry standard digital video interfaces. 2-D images or 1-D line data is rarely just displayed; it is almost always analyzed by machine vision object identification software for dimension measurement, defect detection or counting purposes. Alternatively, spectroscopy mounted array data would be displayed as spectra and analyzed for chemical analysis with spectroscopy software.

  The microscopy inspection applications with 2-D cameras are of static objects like ICs or MEMs devices. The field of view is usually limited by the microscope optics imaging through a 25-mm diameter tube, so small pixel sizes and high pixel count formats are of particular civil interest. The recently introduced mega-pixel CTIA cameras with rolling mode readout utilizing the small pixel size of 15-micron pitch, combined with system read noise of 80 e- rms have the sensitivity equivalent to that of the 25-µm pitch with a noise floor of 222 e- rms, well above the proviso noise floor limit imposed on many approved export licenses for 25-µm pixel InGaAs cameras. The limited military use for rolling mode cameras, and strong civil need for high resolution make this FPA size appropriate for the CCL. Foreign microscopy customers will also have a strong interest in the newer 12.5 micron pixel 1280 x 1024 cameras, but their snapshot readout and slightly improved noise floor will probably require stronger license controls.

High line-array resolution is generally needed for better spectral resolution in commercial applications, unless cost or size drivers select shorter arrays for handheld devices. Spectroscopy arrays and line-scan cameras are mounted on spectrometers and use tall pixels to better collect the light available across the slit height of the spectrometer or multiple fiber inputs. A significant market driver for high-resolution (>=2048 pixels), high-readout-rate arrays (>70,000 lps) is for Optical Coherence Tomography, a technique used to image several mm into opaque tissue, but with depth resolution of 10 microns.

Appendix 4: Performance Metrics for 2D and 1D InGaAs Arrays

Infrared 2-D (aka matrix or area imaging) ReadOut Integrated Circuits (ROICs) for InGaAs sensor arrays.

a.) Description of product type: Integrated circuits with sensor formats of multiple rows and columns designed to image electromagnetic radiation via a detection mechanism that converts the radiation into an electrical signal that is measured for each pixel, with the values for pixel multiplexed into a signal path for output to external camera electronics.

b.) Typical performance specifications: read noise proportionate to pixel size, at video frame rates, as proxy for minimum detectable signal. Imaging format and pixel size, combined with lens system in front of the imager, define the field of view (FOV) and resolution within the FOV.

c.) Military Specifications:
Current license provisos for limiting InGaAs camera sensitivity for general applications have established that cameras requiring tighter control are those with <= 200 e- rms temporal system noise for 25 µm pixel pitch at the maximum exposure time at video frame rates. The ratio of this pixel collection area to the system noise is 3.125. Concern has been stated that hostile forces could use cameras with greater sensitivity to detect US/Allied use of eye-safe illuminators, which would otherwise be covert to standard night vision goggles. State of the art 25 µm pixel camera noise floors with minimal frame lag are available with < 35 e- rms noise floors (for a ratio of 17.8). Development work on smaller pixel, higher resolution ROICs has not been able to match this sensitivity metric, with SUI recently reaching system noise of 35 e- for a 12.5 micron BIGM pixel with a format of 640 x 512. This produces an area/noise ratio of 4.5, equivalent of a system noise of 139 e- for a 25 µm pixel size. (Note: system noise includes dark current noise at the most sensitive operating mode of the camera electronics).

Current maximum InGaAs ROIC format sizes are 1280 x 1024 with 15 or 12.5 µm pitch, with rumors of HD formats of 1920 x 1080 in development.

Infrared 1-D (aka line arrays imaging or spectroscopy) ROICs for InGaAs sensor arrays.

a) Description of product type:
Integrated circuits with sensor formats of one rows and multiple columns designed to image electromagnetic radiation via a detection mechanism that converts the radiation into an electrical signal that is measured for each pixel, with the values for pixel multiplexed into a signal path for output to external camera electronics.

b) Typical performance specifications:
Read noise proportionate to pixel size, at video frame rates, as proxy for minimum detectable signal. Imaging format and pixel size, combined with lens system in front of the imager, define the field of view (FOV) and resolution within the FOV. For spectroscopy applications the pixel height is typically 10 to 21 times taller than the width.

c) Military Specifications:
Pixels whose height is less than 3.8 times their width can be used for 'pushbroom' imaging.

However, compared to area pixels, the ratio of square pixel area to temporal noise is usually less than 2 and frequently less than 1. This significantly limits the potential for military missions.

Draft 2.0
07/18/2013

SITAC Cryocooler Subcommittee Recommendations on Revising USML Category XII

As part of the Obama Administration's broader export control reform initiative, the goal of these recommendations is to propose wording specific to cryocooler devices and related items for a revised U.S. Munitions List ("USML") Category XII that will serve to protect national security interests while not impeding the growth of the U.S. dual-use cryocooler industry. In many areas of cryocooler design and manufacturing technology, the United States does not have a monopoly on cryocooler design and manufacturing technology. Wording that is too broad will capture current and future cryocooler items that have legitimate dual-use applications and thus thwart the ability of U.S. companies to compete in that commercial market space.

In light of the goal to convert the U.S. Munitions List as much as possible to a "positive list" (*i.e.*, one that specifically enumerates items to be controlled as defense articles through their performance levels, characteristics, or functions), the following initial draft wording was circulated among Subcommittee members for their consideration and comment:

> *(4) "Focal plane array" integrated dewar cooler assemblies and "specially designed" components as follows:*
>
> *(i) Mechanical cryocoolers;*
>
> *(ii) Active cold fingers;*
>
> *(iii) Variable or dual aperture mechanisms;*
>
> *(iv) Dewars "specially designed" for articles controlled in XII(a), XII(b) or XII(c);*
>
> *(5) Joule-Thomson (JT) self-regulating cryostats "specially designed" for missile seekers;*

Unfortunately, this wording is unacceptable. It does not meet the Obama Administration's export control reform goal of "strengthening national security and the competitiveness of key U.S. manufacturing and technology sectors by focusing on current threats, as well as adapting to the changing economic and technological landscape."[1] Specifically, the first line in subparagraph (4) would capture too much in that it would place ***all*** "focal plane array" integrated dewar cooler assemblies under ITAR control. This would severely limit the ability of U.S. cryocooler companies to develop and manufacture such assemblies for legitimate and growing dual-use applications such as commercial security, agricultural surveying, and scientific research. Because a product incorporating an ITAR-controlled part or component becomes ITAR-controlled itself via the U.S. Department of State's so-called "see through" rule, they would find they could not compete globally because few, if any, foreign end-users would want to incorporate an ITAR-controlled item into their dual-use products and thus limit their ability to sell

[1] *See* http://www.export.gov/ecr/eg_main_047329.asp.

those products. Moreover, U.S. companies seeking to incorporate such assemblies into their products for the foregoing dual-use applications would likewise find they could not compete globally for the same reason. In sum, placing ***all*** "focal plane array" integrated dewar cooler assemblies under ITAR control would significantly discourage U.S. companies from developing products for these dual-use applications. This, in turn, would have the likely unintended consequences of retarding innovation generally in the U.S. cryocooler industry and leaving the global market to foreign manufacturers of such assemblies as Selex, Thales, AIM, Ricor, and Sofradir.

The second reason the initial draft is unacceptable is that its structure is inconsistent. The first line of subparagraph (4) suggests that only dewars "specially designed" for *"Focal plane array" integrated dewar cooler assemblies* should be controlled, and yet subparagraph (4)(iv) would capture dewars "specially designed" for not just such assemblies, but *any* defense article enumerated in USML Categories XII(a), XII(b), or XII(c).

Finally, subparagraph (5) is unacceptable because it is not clear what is meant by the term "missile seekers." If the intent was to capture Joule-Thomson (JT) self-regulating cryostats "specially designed" for "heat-seeking" missiles, then the term needs to be revised, preferably in a way that more specifically enumerates the missiles that are of concern.

The SITAC Cryocooler Subcommittee is aware of the following military applications for cryocoolers:

- Soldier carry IR
- Vehicle mounted IR
- Aircraft mounted IR
- Missile mounted IR
- Superconducting RF filter
- Superconducting quantum flux sensors for electromagnetic sensing
- Space

SITAC Cryocooler Subcommittee considered what cryocooler technical parameters might characterize cryocooler devices used predominantly in the aforementioned applications and yet not capture other cryocooler devices. It is important to remember that any technical parameters agreed upon now for USML Category XII may not be easily revised down the road to take account of future dual-use cryocooler technological developments. The wording needs to be flexible enough to capture what is truly of military concern at any given moment, but not so much as to hamper the U.S. cryocooler industry in pursuing legitimate dual-use opportunities.

Cryocoolers in the first four applications are typically used in airborne, soldier, or vehicle-mounted surveillance systems, where size, weight, and performance for a particular cryocooler heat lift is the highest priority. Using such criteria to distinguish cryocooler devices used predominately in such defense applications would capture too much, if not now then in future years. The latest IR detector technology is moving to 120K operating temperatures, up from closer to 77K. The result is considerably smaller and lighter cryocoolers due to reduced heat lift requirements for *both* defense and dual-use applications. In terms of performance, cryocoolers in the 1/3-1/2W range were once reserved for defense articles, but are now commonly available. The next generation of cryocoolers for defense applications

will be less than 1/3W in the smallest form factor, but cryocooler technology meeting these performance parameters are likely to spread quickly to the dual-use market in applications such as commercial surveillance, agricultural surveying, and scientific research.

For the applications of superconducting RF filters and superconducting quantum flux sensors for electromagnetic sensing, the primary technical requirement is to get the superconducting filter at or around 77K. There is not any other driving specification, and thus it would be very difficult to separate unique defense uses from broader commercial uses based on this criterion.

For space applications, the primary parameters of concern are size, weight, performance, reliability, and vibration. To determine a specification that contained all these criteria that would apply to only space applications would again, be next to impossible.

Thus, the recommendation of the SITAC Cryocooler Subcommittee is that USML Category XII should enumerate the following with respect to cryocooler devices and related parts and components:

> *(4) "Focal plane array" integrated dewar cooler assemblies "specially designed" for defense articles and "specially designed" mechanical cryocoolers, active cold fingers, and variable or dual aperture mechanisms for such assemblies;*
>
> *(5) Dewars "specially designed" for defense articles controlled in XII(a), XII(b) or XII(c);*
>
> *(6) Joule-Thomson (JT) self-regulating cryostats "specially designed" for defense articles;*

A key component of the new definition of the term "specially designed" in ITAR § 120.41 is its "catch and release" approach. All cryocoolers will be initially "caught" by either subparagraph (a)(1) that would cover cryocooler devices having "properties peculiarly responsible for achieving or exceeding the controlled performance levels, characteristics, or functions described in the relevant U.S. Munitions List paragraph" or subparagraph (a)(2) that would broadly cover any cryocooler device used "in or with a defense article." Yet, the majority of cryocoolers for legitimate dual-use applications, now and in the future, would then be released from ITAR control under one of the (b) subparagraphs. The Subcommittee believes this is the best way to strike the balance between cryocooler technology unique to U.S. defense needs at any given moment and enabling the U.S. cryocooler industry to compete globally over the long-term. In particular, it is the best way to ensure an *innovative* U.S. cryocooler industrial base that can be a secure and reliable supplier, now and in the future, to meet the needs of U.S. armed services.

Appendix A
Foreign Availability

Manufacturer	Country of Origin	Cooler	Weight	cooling power @77K
AIM	Germany	SF070	850gr	500mW
AIM	Germany	SX095	760gr	600mW
AIM	Germany	7062	450 gr	500mW
Le Tehnika	Slovenia	SRI401	470 gr	230mW
Le Tehnika	Slovenia	SRL301	650gr	400mW
Ricor	Israel	K5625S	185 gr	300mW
Ricor	Israel	K527	345 gr	500mW
Ricor	Israel	K563	290 gr	280mW
Ricor	Israel	K5641	290 gr	250mW
Thales	Netherlands	RM1	250 gr	400m W @110K
Thales	Netherlands	RM2	275 gr	400m W
Thales	Netherlands	RM3	450 gr	550m W
Thales	Netherlands	UP8497	650 gr	650 mW
Thales	Netherlands	UP 7086	1300gr	600 mW

Appendix B
Future definition of specially designed (Oct 15, 2013 implementation)

§ 120.41 Specially designed.

a) Except for commodities or software described in paragraph (b) of this section, a commodity or software (see Sec. 121.8(f) of this subchapter) is "specially designed" if it:

(1) As a result of development, has properties peculiarly responsible for achieving or exceeding the controlled performance levels, characteristics, or functions described in the relevant U.S. Munitions List paragraph; or

(2) Is a part (see Sec. 121.8(d) of this subchapter), component (see Sec. 121.8(b) of this subchapter), accessory (see Sec. 121.8(c) of this subchapter), attachment (see Sec. 121.8(c) of this subchapter), or software for use in or with a defense article.

b) A part, component, accessory, attachment, or software is not controlled by a U.S. Munitions List "catch-all" or technical data control paragraph if it:

(1) Is subject to the EAR pursuant to a commodity jurisdiction determination;

(2) Is, regardless of form or fit, a fastener (*e.g.*, screws, bolts, nuts, nut plates, studs, inserts, clips, rivets, pins), washer, spacer, insulator, grommet, bushing, spring, wire, or solder;

(3) Has the same function, performance capabilities, and the same or "equivalent" form and fit as a commodity or software used in or with a commodity that:

(i) Is or was in production (i.e., not in development); and

(ii) Is not enumerated on the U.S. Munitions List;

(4) Was or is being developed with knowledge that it is or would be for use in or with both defense articles enumerated on the U.S. Munitions List and also commodities not on the U.S. Munitions List; or

(5) Was or is being developed as a general purpose commodity or software, i.e., with no knowledge for use in or with a particular commodity (*e.g.*, a F/A-18 or HMMWV) or type of commodity (e.g., an aircraft or machine tool).

Note 1 to paragraph (a): The term "enumerated" refers to any article on the U.S. Munitions List or the Commerce Control List and not in a "catch-all" paragraph.

Note 2 to paragraph (a): The term "commodity" refers to any article, material, or supply, except technology/technical data or software.

Note to paragraph (a)(1): An example of a commodity that as a result of development has properties peculiarly responsible for achieving or exceeding the controlled performance levels, functions, or characteristics in a U.S. Munitions List category would be a swimmer delivery vehicle specially designed to dock with a submarine to provide submerged transport for swimmers or divers from submarines.

Note to paragraph (b): A "catch-all" paragraph is one that does not refer to specific types of parts, components, accessories, or attachments, but rather controls parts, components, accessories, or attachments if they were specially designed for an enumerated item. For the purposes of the U.S. Munitions List, a "catch-all" paragraph is delineated by the phrases "and specially designed parts and components therefor," or "parts, components, accessories, attachments, and associated equipment specially designed for."

Note 1 to paragraph (b)(3): For the purpose of this definition, "production" means all production stages, such as product engineering, manufacture, integration, assembly (mounting), inspection, testing, and quality assurance. This includes "serial production" where commodities have passed production readiness testing (*i.e.*, an approved, standardized design ready for large-scale production) and have been or are being produced on an assembly line for multiple commodities using the approved, standardized design.

Note 2 to paragraph (b)(3): For the purpose of this definition, "development" is related to all stages prior to serial production, such as: design, design research, design analyses, design concepts, assembly and testing of prototypes, pilot production schemes, design data, process of transforming design data into a product, configuration design, integration design, layouts.

Note 3 to paragraph (b)(3): Commodities in "production" that are subsequently subject to "development" activities, such as those that would result in enhancements or improvements only in the reliability or maintainability of the commodity (*e.g.*, an increased mean time between failure (MTBF)), including those pertaining to quality improvements, cost reductions, or feature enhancements, remain in "production." However, any new models or versions of such commodities developed from such efforts that change the basic performance or capability of the commodity are in "development" until and unless they enter into "production."

Note 4 to paragraph (b)(3): With respect to a commodity, "equivalent" means its form has been modified solely for fit purposes.

Note 1 to paragraphs (b)(4) and (5): For a defense article not to be specially designed on the basis of paragraph (b)(4) or (5) of this section, documents contemporaneous with its development, in their totality, must establish the elements of paragraph (b)(4) or (5). Such documents may include concept design information, marketing plans, declarations in patent applications, or contracts. Absent such documents, the commodity may not be excluded from being specially designed by either paragraph (b)(4) or (5).

Note 2 to paragraphs (b)(4) and (5): For the purpose of this definition, "knowledge" includes not only the positive knowledge a circumstance exists or is substantially certain to occur, but also an awareness of a high probability of its existence or future occurrence. Such awareness is inferred from evidence of the conscious disregard of facts known to a person and is also inferred from a person's willful avoidance of facts.

SITAC: Lens and Optics subcommittee

General Comments:

There are two areas of reference for control the United States Munitions List (USML) and the Commerce Control List (CCL). The USML doesn't have specific optics called out and as far as optics are concerned, the reference is primarily in Category XII(E) (section 11 in the rewrite) , "Specially designed for controlled categories". The detailed CCL list is presented below in the following section "Specific".

The committee interpreted that the term "specially designed" means that some fraction of optical assemblies were produced as part of a "defense service" (as defined in § 120.9). For example, a lens designed with specifications for a military project would be part of the ITAR and should come under that form of control. However a stock lens that is sold to many customers for many different applications and is not modified but simply purchased as a stock item by a foreign military would be outside of the USML.

As part of this, the committee also decided that older technologies (greater than 3 years) should move from the USML to the CCL.

The reasoning behind this consensus is that we want to control under the ITAR any new technology that gives an asymmetric advantage to our country's armed forces and prevent the spread of that technology to potentially harmful third parties. However when controls stay in place for too long, it encourages competition overseas.

For example, in the lens world, Ophir Optics (see attached catalog) has essentially equivalent products to most US infrared producers of lenses and are "ITAR FREE". In addition, Israel is a non-signatory to Wassenaar. The result is that even with identical price, warranty and support, the non-ITAR products are preferred and US companies have a distinct disadvantage. This has two effects; older designs are no longer wanted inside the US and cannot be sold abroad, so R&D and staffing must be reduced to sustain the business and secondly, the same foreign competitors can produce volume overseas and offer volume pricing for single units, resulting in even lower sales *inside* of the US. It should be understood that the likelihood of a defense article being obtained for use against US forces is proportional to the total market availability. Therefore, once foreign markets grow towards the size of the US market volume, the efficacy of defense controls on those items should be reconsidered. *The combination of these effects has the perverse effect of driving up DoD procurement costs, reducing capabilities of the US industrial base, and encouraging foreign research and development, while not offering a sustainable technical advantage to our armed forces.* Other examples of internationally sourced suppliers of lenses and optics are:

http://www.edmundoptics.com/market-solutions/applications/swir-imaging/
http://www.kowa-usa.com/kowanewweb/lenses/fa2.html
http://news.thomasnet.com/fullstory/SWIR-Imaging-Lenses-are-offered-in-25-and-50-mm-versions-579860
http://www.optec.eu/ita/swir/swir_lenses.htm

Although this committee is primarily concerned with optics, a second good example is with the SWIR camera market. In the US, the major two suppliers of SWIR cameras are both large corporations. They are both conservative in their stance and as of this writing SWIR camera technology is controlled under the ITAR. Realizing this, IMEC (Interuniversity Microelectronics Centre) in Leuven, Belgium, invested and successfully developed SWIR technology and have spun it off into a company called Xenics which has become a strong competitor both within and outside the US. There are other similar success stories for infrared technology producers in France, Ireland, Japan, China and Israel, with a new Turkish ROIC designer generating high-resolution, high performance ROIC designs likely to foster additional entrants. These non-ITAR companies are doing extremely well as they are free to sell the world over without restriction while their US competitors are under ITAR restriction.

To summarize, we agree that military (USML) controls are required for newly developed technologies that provide some sort of tactical or strategic advantage. However, unduly long and limiting export controls eventually serve to defeat that purpose, drive up DoD procurement costs, and for a variety of reason put our armed forces at risk. Wherever a question exists a Commodity Jurisdiction should be used to give the relevant agencies a chance to weigh in. Once a technology is older than three years or significant overseas availability arises, these technologies should transfer from the USML to the CCL. This would allow rational controls and allow US businesses to compete effectively.

Specific Items

By Optics Categories:

Optical Blanks

a.) Description of product type: Optical materials capable of allowing electromagnetic energy (in wavelength bands of interest) to pass through the material with minimal or controlled effects, formed into a starting form that then can be molded or cut into the desired geometry for grinding, polishing or, in the case of optical waveguides, drawing to the final optical-mechanical specifications. Such processing needed to turn blank into a useful final product such as optical windows, filters, lens components, and/or complete lens assemblies

b.) Typical performance specifications: Source material(s), material purity, transmission at specific wavelengths or wavelength bands, refractive index, optical clarity, blank shape, blank dimensions (thickness, height/width or diameter), surface (flatness or -curvature, parallelism, and finish), coatings (hardness, or anti-reflection)

c.) Until additional processing takes place optical blanks have few characteristics specific or unique to military applications or national security concerns. Military surveillance missions likely need lenses

that pass or focus SWIR, MWIR and LWIR wavelengths, especially for long distances with the ability to distinguish between hostile threats or innocent civilian activities. In addition, high resolution lenses will require larger diameters, thicknesses, and indices of refraction. High-powered lasers for directed energy may require optics with higher purity, higher clarity, greater homogeneity, etc.

CCL category text	Example Products	What military would be concerned about (specs, end control)	Foreign Availability and implications
*6a004.*b ZnSe or ZnS with transmission from 3-25 microns and being any of the following:	Commercial use: Could be used in any commercial lens and has strong dual use, such as biological, machine vision, glass making, process control Military: Military gun sites	SWIR imaging could also be used as a telescope for night maneuvers that will allow for tracer fire to be seen as well as imaging in low light level conditions	See Datasheets attached many equivalent products
b.1. exceeding 100 cm^3 in volume or			
b.2. exceeding 80 mm in diameter or length of major axis			
c.2 Any substrate that is space qualified having surface coatings or protective films			
c.4. space qualified materials that also are composite materials having a coefficient of linear thermal expansion = < 5X x10E-6 in any coordinate			
*6c002.*a Elemental Tellurium of purity levels of 99.9995%	AO Modulator, beam directors	Directed communications	
6c002.4 Single crystals of any of the following			
b.1. Cadmium Zinc Telluride with zinc content less than 10e-6 by mole fraction;	X-ray and gamma-ray detectors; MWIR photorefractive gratings. Medical imaging. Astronomy.	Unknown.	
b.2. Cadmium Telluride	LWIR windows/lenses, solar cells. 6-22 µm.	Unknown	
b.3. Mercury Cadmium Telluride	Already controlled under detectors, we		

CCL category text	Example Products	What military would be concerned about (specs, end control)	Foreign Availability and implications
	do not know why it is under optics control		
6c004.b.1 Potassium Titanyl Arsenate	Non-linear harmonic frequency generation in 1-5 µm region.	Unknown	
6c004.b.2 Silver Gallium Selenide	0.9-16 µm transmission range. SHG. OPOs. LIDAR. IR waveplates.	Unknown	
6C004.b.3 Thallium arsenic selenide	Non-linear harmonic frequency generation.	Unknown	
6c004.c Nonlinear materials have a third order susceptibility of 10e-6 m^2/v^2 and a response time of less than 1 milli-seconds	Commercial: Research use in the US for high density data storage Military: Rapid Access storage for optical based target Tracking	Target Tracking	
6c004.d substrate blanks of Silicon Carbide or Beryllium/Beryllium exceeding 300 mm in diameter or major axis	Commercial/Military Space based applications specifically telescopes	Space based applications specifically telescopes	
6c004.e Glass including fused silica, phosphate glass, fluorophosphates glass, zirconium fluoride, hafnium fluoride having the following properties:	Commercial: All coating materials; could be used for a large swatch of industry including just about any lenses that image. ZrF4 – component of ZBLAN glass. Military: Critical component in a variety of sensors	Could be used in the design of notch filters that could be used for spectral analysis of threats such as bombs, chemical weapons etc.	China has a large supplier CDGM that has many of these glasses.
e.1 a hydroxyl ion concentration of less than 5 ppm			
e.2 integrated metal purity levels of less than 1 ppm			
e.3. high homogeneity (index of refraction variance) of less			

CCL category text	Example Products	What military would be concerned about (specs, end control)	Foreign Availability and implications
than 5 x 10E-6			
f. Synthetically produced diamond material with an absorption of less than 10e-5/cm			
6c005.a. Titanium doped sapphire	Commercial: Sapphire Lasers could be used potentially for any high powered laser applications such as welding, automobiles. Science research Military: Battlefield Lasers	Could theoretically be made into a battle ready laser system	
6c005.b Alexandrite	Unknown		
6c994.a.1 bulk fluoride compounds containing ingredients with a purity of 99.999% or better or	Unknown		
6c994.a.2. Bulk fluoride glass made from compounds controlled elsewhere			
6c994.b Optical fiber performs made from bulk fluoride compounds containing ingredients with a purity of 99.999% or better			
Silicon – NOTE FROM A CJ RULING NOT CURRENTLY ON THE CCL	Commercial: Could be used for literally any infrared applications from 2-14 microns. In this form of the material the amount of applications is nearly unlimited, port surveillance, security, CPU processors, computers	If made big enough could be used in infrared telescopes once it is processed, coated, assembled into a system, mated with a camera, and then mounted inside a gimbal. We strongly recommend removing this control as in the	China

CCL category text	Example Products	What military would be concerned about (specs, end control)	Foreign Availability and implications
	manufacture, glass making, machine making, process control…	current form very broad reaching.	
Germanium – NOT CURRENTLY ON THE CCL FROM A CJ	Commercial: Could be used for literally any infrared applications from 2-14 microns. In this state the amount of applications is nearly unlimited, port surveillance, security, CPU processors, computers manufacture, glass making, machine making, process control…	If made big enough could be used in infrared telescopes once it is processed, coated, assembled into a system, mated with a camera, and then mounted inside a gimbal. We strongly recommend removing this control as in the current form very broad reaching.	

Components

a) Description of product type:
Optical piece parts ready for assembly into higher-level systems or sub-systems: polished windows, filters, individual refracting objectives for focusing or collimating light, individual mirrors for focusing or reflecting light.

b) Typical performance specifications:
Material type, size, weight, surface flatness or curvature, wavelength passband and rejection ranges, defect density of material or coatings, refraction constants, reflection/transmission characteristics versus wavelength, lens shape type, focal length, coatings

c) Military Specifications:
High power lasers may require unusual tight flatness, lowest defect density, lowest reflectivity, very narrow bandpass filter.
Individual lens or mirror elements are not usually uniquely directly applicable to military missions as narrow field of view over long distances needs compound lens assemblies. Some lens materials may be unique in infrared wavelengths for high performance designs. Narrow bandpass filters for target designator laser wavelengths may have significance for daytime targeting. Ultra low weight or material density for large diameter objectives would be important for airborne or satellite imaging

CCL category text	Example Products	What military would be concerned about (specs, end control)	Foreign Availability and implications
Optical Mirrors 6A004.a			
a.1 Deformable Mirrors- continuous or multi-element and capable of reposition at rate of >100 Hz	Commercial: free space communications, mobile to mobile Military: Adaptive optics correction: space or airborne or mobile platforms for targeting or directed energy	Adaptive optics correction: space or airborne or mobile platforms for targeting or directed energy	
a.2 Lightweight monolithic mirrors density <30 kg/m^2 and a total mass exceeding 10 kg		Space based imaging optics	
a.3. Lightweight composite or foam mirror structure of less than 30 kg/m^2 and a total mass exceeding 2kg.		Space based imaging optics	
a.4 Beam Steering mirrors more than 100 mm in diameter or length of major axis, flatness of half wave or better, and bandwidth exceeding 100 Hz	Commercial: Telecommunications, adaptive correctors for land based telescopes.	Military: Adaptive optics correction: space or airborne or mobile platforms for targeting or directed energy	

CCL category text	Example Products	What military would be concerned about (specs, end control)	Foreign Availability and implications
Space qualified components 6a004.c			
c.1. light weighted to less than 20% equivalent density compared with a solid blank of same aperture and thickness	Commercial: Anywhere weight is desired to be reduced. This could include any vehicle mounted system for police, fire or commercial systems where weight is a concern.	Low launch weight with rigidity for low distortions. Useful for components in a space environment.	

CCL category text	Example Products	What military would be concerned about (specs, end control)	Foreign Availability and implications
	Military: Telescopes		
c.3. segments or assemblies of mirrors designed to be assembled in space into an optical system with a collecting aperture equivalent to or larger than a single optic 1 meter in diameter	Scientific grade telescopes for measuring environmental conditions on earth	Optical Space based telescopes used as part of targeting systems.	

CCL category text	Example Products	What military would be concerned about (specs, end control)	Foreign Availability and implications
6A004.e Aspherical optical elements having ALL of the following:			
e.1. largest dimension of the optical aperture > 400 mm	Large Size Image systems such as ground based telescopes, high end UV system for semiconductor processing: Military: Lightweight or improved performance (e.g., high transmission) telescopes.	Long distance surveillance to resolve differences between weapons or civil.	
e.2. surface roughness less than 1 nm (rms) for sampling lengths equal or greater than 1 mm and		Low stray light, low aberrations	
e.3. Coefficient of linear thermal expansion's absolute magnitude less than 3x 10e-6/k at 25C		Combined with roughness and aperture likely for space/satellite telescope to minimize stray light from strong	

CCL category text	Example Products	What military would be concerned about (specs, end control)	Foreign Availability and implications
		sunlight	

CCL category text	Example Products	What military would be concerned about (specs, end control)	Foreign Availability and implications
*6A994.a.*1 Optical Filters for wavelengths longer than 250 nanometers comprised of multi-layer optical coatings and having either:			
a.1.a bandwidth equal to or less than 1 nm FWHI and peak transmission of 90% or more OR .1 nm FWHI and peak transmission of 50 %	Commercial: Cellular biology analysis such as used in micro titer plates Military: Laser blocking filters for binoculars	If specifications for filters should be common knowledge could allow for potentially blinding lasers to be used on the battlefield against US soldiers.	
6A994.a.2 wavelengths longer than 250 nm	Commercial: Military:		
a.2.a. Tunable over a spectral range of 500 nm or more	Science: biological or materials spectral analysis, airborne monitor of crop health Military: spectral signatures for propellants, IEDs	We would not want details of our countermeasures to become public knowledge	
a.2.b Instantaneous optical bandpass of 1.25 nm or less	Commercial: Military: targeting laser wavelength identification	Code of the day information would be of high interest to protect for national security reasons.	
a.2.c. Wavelength resettable within 0.1 ms to an accuracy of 1 nm or better within the tunable spectral range and	Commercial: Military: targeting laser wavelength		

CCL category text	Example Products	What military would be concerned about (specs, end control)	Foreign Availability and implications
	identification, wavelength code of the day identifiers		
a.2.d. a single peak of 91% transmission or more	Commercial: High transmission useful for commercial binoculars and or monocular viewers used for hunting. Military: military grade viewing devices and/or designators		
a.3. Optical opacity switches with a FOV of 30 degrees or wider and a response time equal or less than 1 nanosecond	Commercial: telecommunications or free space communication Military: range gated imaging for rejecting back scatter, seeing through obscurants		
6a994.b Fiber cable having an attenuation of less than 4 dB/km in the wavelength range exceeding 1 micron to 3-3000 microns	Commercial: Long range Telecommunications Military: Telecommunications		

Optical Lens Systems

a) Description of product type: Assemblies of optical components for focusing light from a source down to a spot, or to focus an image of an object at a distance onto an imaging sensors, and/or assemblies for collimating light to control source beam diameter or other properties.

b) Typical performance specifications:
Focal Length, magnifications – fixed or zoom range, f/# - maximum or range of f/# when the aperture is adjustable or variable based on magnification, image and object distances, diameter of the light collecting optic, diameter of image size at the focal plane or image sensor class the lens is designed to match (1 inch sensor format size has illuminated image diagonal of 16 mm), field of view for supported sensor format, telecentricity.

c) Military Specifications:

The draft USML categorizes 12(e) (11) as 'Infrared lenses, mirrors, beam splitters or combiners, and associated treatments and coatings, "specially designed" for any article controlled in [Category XII];'

CCL category text	Example Products	What military would be concerned about (specs, end control)	Foreign Availability and implications
There do not appear to be CCL categories for Optical Lens Systems. However, implications of control listings for blanks and components are that they enable lens assemblies for long-distance surveillance in the infrared imaging bands, particularly from space or from mobile platforms.	*Lens assemblies with fixed or adjustable focus, iris, focal lengthes forwide angle (nominally < 20 mm)for vehicle field of view or telescopic (>100 mm)*	*1) Lenses with long focal lengths for small field of view and high magnification to determine hostile intent.* *2) f/# of 1.3 or smaller* *3) Zoom ranges of > 6:1*	*Broad global availability of lens assemblies for f/1.4, 8 to 100 mm focal lengths, UV, Visible, NIR, SWIR, MWIR and LWIR. Infrared zooms are rare*
*6a004.d.*2 equipment having steering tracking, or stabilization or resonator alignment bandwidths equal to or more than 100 Hz and an accuracy of 10 micro-radians	*Not optics, lenses or optical materials*		
*6a004.d.*3. Gimbals having ALL of the following:	*Not optics, lenses or optical materials*		
d.3.a maximum slew exceeding 5degrees	*Not optics, lenses or optical materials*		
d.3.b a bandwidth of 100 Hz or more	*Not optics, lenses or optical materials*		
d.3.c angular pointing errors of 200 micro-radians or less and having ANY of the following	*Not optics, lenses or optical materials*		
d.3.d.1 exceeding .15 meter but not exceeding 1 meter in diameter and capable of angular accelerations exceeding 2 radians/s^2	*Not optics, lenses or optical materials*		
d.3.d.2 exceeding 1 m in diameter or major length of any axis and capable of angular accelerations exceeding .5 radians/s^2	*Not optics, lenses or optical materials*		
d.4 Specially designed to	Commercial:		

CCL category text	Example Products	What military would be concerned about (specs, end control)	Foreign Availability and implications
maintain the alignment of phase array or phased segment mirrors systems consisting of mirrors with a segment diameter or major axis length of 1 meter or more	Military:		

Control Equipment

a) Description of product type:
Equipment for manufacturing optical blanks, components, or systems to specification limits

b) Typical performance specifications:
Surface curvature, or flatness, roughness, coating defect density, thickness uniformity

c) Military Specifications:
Equipment that can produce the ultra-smooth, ultra-parallel, thickness uniformity surfaces, particularly for ultra-light, high strength components that are used in space telescopes.

CCL category text	Example Products	What military would be concerned about (specs, end control)	Foreign Availability and implications
6a004.d.1 Equipment **specially** designed to maintain the surface figure or orientation of the space qualified components in 6a004.c.1. or 6a004.c.3	Commercial: Same instrumentation can be used for making commercial optics.	Monitor spread of capabilities	
6e004.d. Optical surface coating and treatment technology required to achieve an optical thickness uniformity of 99.5% better for optical coating 500 mm in diameter, total loss of less than 5e-3	Commercial: Machinery that allows for high yield optical filters for commercial uses Military: Filters used for optical telescopes	Monitor spread of capabilities	

SITAC: Image Intensifier and EMCCD Subcommittee Recommendations

I. Image Intensifiers, Subsystems and Cameras
- Executive Summary
- Background
- Current Export Controls
- Discussion and Recommendations
- Appendices:
  - A. Image Intensifier International Manufacturers
  - B. Sample Specifications: Internationally Manufactured image Tubes

II. EMCCDs, Subsystems and Cameras
- Executive Summary
- Background
- Current ITAR and CCL Export Controls
- Discussion and Recommendations
- Appendices:
  - A. EMCCD Manufacturers

I. Image Intensifiers, Subsystems and Cameras

Executive Summary

The Subcommittee proposes the following two general rules to help set the level of export control for image intensifiers, subsystems and cameras:

1. For derivative military products that use image intensifier tubes that are manufactured outside the US (such as second generation image intensifier based systems), US controls should be no more stringent on those products than export controls established by Wassenaar countries. Any additional level of control imposed by the US Government would result in an unfair disadvantage to US product integrators as compared to non-US integrators since both would be able to provide the same level of technology to international markets. (If US companies incorporate other controlled technology in those integrated products, the level of control may be affected).

2. For image intensifier tubes and derivative military products that use image intensifier tubes that are manufactured in the US should continue to be analyzed with Figures of Merit and other performance features of comparison with non-US products. In particular, products having the same or lower performance than foreign sources must be given the same level of export control as foreign available products and their derivatives (as described above). Otherwise US image intensifier manufacturers and product integrators will be unfairly disadvantaged by export controls in participating in world markets and will not be able to maintain the volume of business and technology edge that will allow them to flourish. Figures of merit (FOMs) must be established that are fair and justifiable as a means of comparing image intensifier product performance. Autogating capability and improved resolution must be added to the list of exportable features.

3. For dual-use products that use image intensifier tubes and specifically products that do not incorporate a direct view of the output of the image intensifier tube, commercial export controls are required enabling US companies to better manage units for demonstration and to engage representatives and distributors.

Background

The following facts regarding current states of international production of image intensification tubes and devices are the basis for these recommendations:

1. Second generation image intensification tubes are no longer manufactured in the United States. They are, however, manufactured in 6 Wassenaar countries and three non-Wassenaar countries (see Appendix A).
2. Current second generation image intensification tubes manufactured outside the US include the following the following capabilities listed below (see Appendix B for more detailed information):
    a. Autogated image tubes
    b. FOM ratings well in excess of 1600
    c. S20, S25, Multialkali, Cs-Te, Bi-Alkali, CsI, and SB Photocathodes
    d. P20, P23, P31, P40, P43, P46, P47 & FS Phosphor Screens
3. Photonis (of France/The Netherlands) manufactures XD-4 and XR-5 second generation image tubes which compete very favorably with third generation tubes except in the critical area of photoresponse (Luminous Sensitivity) where third generation tubes exceed very high end generation two tubes by factors of 1.7 to 2.8. (Gen III overall performance is impacted by the presence of a thin film).
4. Second generation image intensification tubes manufactured by Photonis contain microchannel plates with hole-to-hole pitch in the 4-6 micron range.
5. Third generation image intensification tubes and systems are manufactured in 3 Wassenaar countries (Appendix 1A). It has not been confirmed that third generation image tubes are manufactured outside the listed Wassenaar countries.
6. US business is significantly disadvantaged by being unable to export autogated image tubes as well as those with Figures of Merit in excess of ITAR-dictated ceilings when manufacturers from Wassenaar countries can and do routinely export the these same image tubes and devices. In fact, US system assemblers and device manufacturers can import autogated and high-FOM image tubes from international suppliers but cannot re-export them to compete in the international marketplace.

Current ITAR and CCL Export Controls

Image intensifier tubes, night vision devices and Cameras (that incorporate Image Intensifier tubes) are controlled by Category XII of the ITAR and sections 6A002, 6A992 and 6A003 and 6A993 of the Commerce Control List. Specific criteria listed category for ITAR control of image intensifier tubes and night vision devices include:

- "…specifically designed, modified or configured for military use"
- "…second generation and above military image intensification tubes…specifically designed, developed, modified, or configured for military use"
- "…any military system comprised of non-military specification components"
- "Replacement tubes…exported for commercial systems…"
- "Components, parts, accessories, attachments and associated equipment…except for such items as are in normal commercial use"
- Technical data

Category XII, ITAR specifically provides for licensing "Military second and third generation image intensification tubes…" by the Department of Commerce (ECCN 6A002A and 6A003A) when part of a commercial system.

Category XII parameters defining second and third generation image intensification tubes include:

- Peak response within 0.4 to 1.05 micron wavelength range
- Incorporation of a microchannel plate having a hole pitch of less than 25 microns, and:
    - S-20, S-25 or multialkali photocathode; or
    - GaAs, GaInAs or other semi-conductor photocathode

Discussion and Recommendations

a. The Manufacture of second generation image tubes ONLY by non-US entities argues for no more restrictive control within Wassenaar countries than those detailed by Wassenaar agreement.
b. ITAR export restrictions of image intensifier tubes and systems using Figure of Merit (FOM) calculi, Autogated function, and photocathode materials other than GaAs, GaInAs and GaAsP are obsolete due to the capabilities of most internationally manufactured image tubes.
c. Based on the international production - especially Photonis of France/The Netherlands - of microchannel plates with hole-to-hole pitch in the 4-6 micron range, a new standard should be set for ITAR control of this characteristic.

As such, we recommend:

a. Control of third generation image intensification tubes and devices should continue to be based on figures of merit.
b. Figures of merit need to be revised and continue to evolve based on real foreign available products and technology.
c. Controls for exportable products need to be no more restrictive than those agreed to by Wassenaar
d. Retain high level of control for specific devices designed or developed for military by the USG regardless of generation.
e. Image intensified end products not designed for military applications must be controlled as commercial products as does Wassenaar.
f. Establish control of all second generation image intensification tubes to be no more restrictive than that agreed to by Wassenaar, to include the auto-gating function.
g. Establish control to be no more restrictive than that agreed to by Wassenaar for specific second generation devices using components NOT designed or developed for the military by the USG, even if such devices can be worn on a headgear or helmet and/or employ autogated image intensification tubes.

Appendix A Image Intensifier International Manufacturers

	Countries	Wassenaar	Manufacturers	
			Gen 2	Gen 3
1	France/Netherlands	YES	Photonis*	
2	Germany	YES	Harder ProxiVision*	Harder*
3	Japan	YES	Hamamatsu*	Hamamatsu*
4	Russian Federation	YES	Katod* Ekran Melz	Katod*
5	United Kingdom	YES	Photek*	
6	United States	YES		L-3 & ITT (no 25mm)
7	China	NO	Hioptic* NORINCO	
8	Taiwan	NO	Acuri Tech	
9	India	NO	BEL	

*** Indicates known production of autogated image tubes**

Appendix B Sample Specifications: Internationally Manufactured image Tubes

The sample specifications listed below are representative of the more than 160 models of image intensification tubes surveyed from international manufacturers:

Seq	Gen	Country	Company	Photo-Cathode	Model	Luminous Sensitity (µa/lm)	Limiting Resolution (lp/mm)	SNR	Phosphor Screen	Gated	FOM (max)
1	3	Germany	Harder	GaAs	HD1521	1500-2500	57-72	19-28			2016
2	3	Japan	Hamamatsu	GaAs	V6833P	1500	64				
3	3	Russia	Katod	GaAs	EPM102G-05-22	1500-1800	51-64	21-24	P22/P43	YES	1536
4	2	China	Hioptic	S25+	1XZ18/18WHS-1 (xx2040)	600	60	20	P31		1200
5	2	France/Neth	Photonis	S20 S25	XR-5		64-72	28	P22/P43	YES	2016
6	2	Germany	ProxiVision	S25	XX1800B	300	28		P20		
7	2	Germany	Harder		HD2102	500-750	57-72	18-23			1656
8	2	Japan	Hamamatsu	Multi-Alk	V7669U-01	550	64				
9	2	Russia	Ekran	S25	EPM 225 G	450-700	45-60	18-22	P22/P43		1320
10	2	Russia	Melz EVP		EPM70G	500-600	58	22+			1276
11	2	Russia	Katod	S-25	EPM44G	500-600	51-64	17-21	P22/P43	YES	1344
12	2	Taiwan	Acuri Tech, Ltd		INS-1870G	650	64	23			1472
13	2	UK	Photek	CsI			40-50		P20 P43 P46 P47 FS	YES	

Indicates autogated tubes or FOM >1600

II. EMCCDs, ~~EMCCD~~ Subsystems and ~~EMCCD~~ Cameras

Executive Summary

The Subcommittee proposes the following general rule to help set the level of export control for EMCCDs, ~~EMCCD~~ subsystems and ~~EMCCD~~ cameras:

1. Products that are designed for military applications must continue to be controlled as military items. This includes portable devices that use a near-eye display.
2. For products for commercial applications, since the EMCCDs are manufactured outside the US by only one company (e2v, Chelmsford, England), the US controls should be no more stringent than export controls established by Wassenaar countries so it sets a level playing field for US manufacturers to compete with the manufacturers from Wassenaar countries. Any additional level of control imposed by the US Government would result in an unfair disadvantage to US product integrators as compared to non-US integrators since both would be able to provide the same level of EMCCD technology to international markets. (If US companies incorporate other controlled technology in those integrated products, the level of control may be affected).

Background

The following facts regarding current states of international production of EMCCDs is the basis for these recommendations:

1. The EMCCDs are only manufactured outside US by e2v of Chelmsford, England a Wassenaar country and they were never manufactured by any companies in the United States.
2. Texas Instruments (Japan) previously manufactured these devices but recently discontinued those products.

Current ITAR and CCL Export Controls

The EMCCDs are controlled by sections 6A002 and 6A992 of the Commerce Control List and the subsystems and cameras are controlled by 6A003 and 6A993 of the Commerce Control List.

Discussion

Products designed for military use (such as portable products with a near-eye display) need to continue to be controlled as military products. Dual-use products as well as

products designed primarily for commercial applications need to take into consideration the significant availability of the technology and competitive products outside the US since the primary sources of supply are located there. As such, these EMCCDs, EMCCD subsystems and EMCCD cameras should continue to be controlled under commercial product export controls without any encumbrances so that US products are no more restrictive than those agreed by Wassenaar countries.

Appendix A: EMCCD Manufacturers

EMCCD					
P/N	Type Device	Device Format	Pixel Size	Manufacturer / Country	Comments
CCD60	FF-EMCCD	128x128	24x24um	e2v / England	CCD device
CCD65	FF-EMCCD	576x288	20x30um	e2v / England	CCD device
CCD97	FFT-EMCCD	512x512	1616um	e2v / England	CCD device
CCD97	BFT-EMCCD	512x512	1616um	e2v / England	CCD device
CCD201	BFT-EMCCD	1024X1024	13X13um	e2v / England	CCD device
NOTES:					
1]	FF	Full Frame			
2]	FFT	Front Illuminated Frame transfer			
3]	BFT	Back Illuminated Frame Transfer			

July 13th, 2013, rev. 3
Draft Version

SITAC: Lasers Subcommittee

Dave Dozor, Kanishka Tankala, Breck Hitz, Roger Stettner, George Gasparian, Scott Johnson

Introduction:

Lasers are optical sources providing highly coherent light. Laser light is both spatially and temporally coherent. Spatial coherence is responsible for being able to focus the beam to a very small spot or to provide collimated light (i.e., a spot diameter that varies slowly over a large distance)[1]. Temporal coherence implies that the light is polarized at a single wavelength, whose phase is correlated over large distances. Temporal coherence is responsible for laser being nearly monochromatic (i.e., having narrow line widths) and being able to provide extremely short pulses[2]. *These properties of laser light are responsible for defining its quality, which enables various commercial and defense applications.*

Lasers are controlled by both the ITAR/USML, as munitions ("Defense Articles") and the EAR/CCL, as commercial items ("Dual-Use Items"). USML categories that are explicit in their enumeration of lasers are Category XII-Fire Control, Range Finder, Optical and Guidance and Control Equipment and Category XVIII-Directed Energy Weapons. Lasers are controlled implicitly in Category XI: Military Electronics (specifically Countermeasures), although they appear as parts, components, accessories, and attachments in other categories. CCL Category 6: Sensors and Lasers, controls lasers and their parts, components, accessories, and attachments.

Objectives of the Lasers Subcommittee:

The Lasers Subcommittee was concerned with these tasks:

1) Provide descriptions of the products in the Lasers category. Describe the features of the products and its performance characteristics.
2) Provide the characteristics that will make this product "specially designed" for military applications. Be specific on performance metrics that seem unique to military items.
3) Address foreign availability.

Due to the very large number of lasers and related items, the Lasers Subcommittee decided to focus on laser products that can be considered military and/or dual-use with the intention to provide some understanding of how Defense Articles can be distinguished from Dual-Use Items. To do this, we identified the specific product types listed in Table 1.

Laser Pointers and Illuminators	LADAR/LIDAR	IRCM/EOCM
Laser Target Designators	Remote Sensing	Dazzlers
Laser Rangefinders		Directed Energy

Table 1: Laser Products Considered

These product types follow Jeff Hecht's: Lasers for Defense and Security presentation, which is included as Attachment A.

[1] It should be noted that the 'etendue', which is the product of the source area and the source solid angle, can only increase in an optical system. Etendue is often replaced by 'Beam Parameter Product (BPP), which is the product of the beam diameter and the beam divergence, in discussions of practical systems. BPP is proportional to the square root of etendue.

[2] The brevity of duration of a laser pulse is limited by its spectral width (e.g., the narrower the line width, the shorter the pulse can be, in theory). The 'time-bandwidth product', therefore, is a measure of quality of an ultra-short pulse, given its spectral bandwidth.

Background:
There are many different types of lasers; Gas Lasers (including Chemical and Excimer Lasers), Dye Lasers, Solid State Lasers (doped glass or crystal rods, disks, or slabs), Fiber Lasers (doped glass fiber), Photonic Crystal Lasers, Semiconductor Lasers, Free-electron Lasers, etc. Each of these lasers has its own benefits and drawbacks and, therefore, is more or less suitable for certain applications. Since the type of laser does not necessarily dictate whether it should be classified as a Defense Article or a Dual-Use Item, the committee elected to consider specific applications, which are considered military, understanding that defense applications will require Defense Articles and Dual-Use Items and commercial applications will require Dual-Use Items.

The quality of a laser source is related to its Beam Parameter Product (BPP) and its Time-Bandwidth Product (TBP). For a given radiance, the BPP measures how well a monochromatic, coherent source can be collimated. In other words, a very small source diameter and a very small divergence are desirable quantities, as is a very high radiance. The BPP sets a limit on how small of an area the beam can be collimated into or equivalently, given a diameter, how small the divergence can be. The TBP sets the minimum pulse width achievable.

The characteristics of lasers include; intensity, color, and polarization. The intensity of the light corresponds to the amplitude of the electromagnetic radiation (or, since light is believed to exhibit particle wave duality, the number and type of photons). The color of the light corresponds to the frequency of the electromagnetic radiation. The polarization of the light corresponds to the orientation (and how it varies) of the orthogonal electric and magnetic fields that make up the electromagnetic radiation.

With respect to intensity, this is a measure of the output power of the laser. Since photons are packets of light with a specific energy, the output power is also proportional to the number of photons produced. The electromagnetic radiation can be continuous wave (CW) or pulsed. To achieve higher output powers, lasers are often pumped – sometimes in stages. For example, a laser diode, which is an electrically pumped semiconductor often emitting with a fairly broad line width, can be used to pump another laser cavity (e.g., another semiconductor laser, a Solid State Laser – a diode-pumped solid state laser (DPSS), a Fiber Laser, etc.). By doing this, higher gain can be provided between the input power and the exit beam. Efficiencies of optically pumped lasers are typically greater than 50%, with efficiencies in the 90+% range achieved in special cases.

The color of laser radiation is generally considered to be discrete (i.e., there is one laser 'line' that is emitted from the 'cavity'). However, in practice, the width of the line (line width) is not infinitesimally narrow. It has some line width (or bandwidth). The width of this line sets the shortest pulse width possible with a given laser. The stability of this line, how well the color remains the same, is also an important property. The color of laser radiation, to some degree, is governed by cavity design, including the material(s) (gain media) whose valence electrons undergo population inversion.

The polarization of a laser is a property of its temporal coherence. For a single color, it is possible for the wavefront, at any point in time, to have a specific relationship between the phase of the electrical and magnetic fields. This relationship will hold true for many photons over great distances if the line width is very narrow. If not, the photons of various colors will eventually be out of phase (i.e., become incoherent) due to the difference in the frequencies (inversely proportional to wavelength). In any

event, the polarization of a laser and its coherence length, the length over which it will remain coherent, are important in certain laser applications.

As alluded to in the introduction, the output of a laser can be continuous wave (CW) or pulsed. CW lasers provide laser power (rate of energy) that is nearly constant over some interval of time. Pulsed lasers can be capable of extremely high instantaneous power by providing a high energy pulse over a very short period. This property is useful for a variety of commercial applications (e.g., material ablation, cutting, drilling, etc.; spectroscopy; optical communications; laser ranging; etc.). The duration of the pulse, the energy of the pulse, and the frequency (or repetition rate) of the pulse are also important characteristics of laser output.

Laser Pointers and Illuminators:

•*Description (Features and performance characteristics):*

Laser pointers and illuminators have a substantial number of commercial and military applications. The simplest laser pointer might be a red or a green hand-held pointer that employs an infrared diode laser and, in the case of the green pointer, a frequency-doubling crystal. These are commonly used in the world's industrialized nations and readily available for public consumption with power generally limited to 5mW (or greater at larger beam diameters under certain safety regimes) to ensure eye safety. As it turns out, the human cornea does not transmit wavelengths longer than about 1400 nm, so lasers at longer wavelengths are termed "eye safe" because their radiation cannot be focused to a high intensity onto the retina. However, even "eye safe" lasers, with sufficient power, can cause severe damage to the cornea regardless of wavelength.

For our purposes here, "laser pointers" produce a spot or line which is visible to the human eye. The spot or line can be useful for designating a particular spatial location, or for easily orienting objects. A "laser illuminator" is a floodlight that produces infrared radiation to illuminate a scene that can be viewed with appropriate IR-viewing equipment, but cannot be viewed otherwise.

Laser pointers and illuminators are generally CW devices, although this is not always the case. These have similar uses in military and commercial applications and are typically provided by laser diodes, although for very long distances, other types of higher output power lasers are used.

Characteristics that are important for Laser Pointers and illuminators include: beam divergence, beam power, beam diameter. In certain applications, beam polarization, beam wavelengths, efficiency/power consumption, size, mass, environmental hardening, and ability to integrate into a larger system are also important. The power and beam divergence are responsible for the useful range of a pointer.

Our searches have found laser pointers useful for military and law enforcement to have beam power ratings as high as 250mW and 50mW, respectively. (Laser diode illuminators have been found with much higher ratings.)

Laser pointers and illuminators are also used in materials processing and laser display technologies. For example red pointers are common in laser marking systems to get a visual display of the marking pattern on a work piece for set up before actual laser marking occurs. Red, green and blue (RGB) lasers are used for laser displays and in planetariums world-wide. Evans and Sutherland has provided few watt level outputs at visible wavelengths by frequency converting 10-20 W IR solid state and fiber lasers. Several watts of RGB are commonly used in various laser display shows.

The FDA has classified lasers in an effort to promote safety. FDA classifications are based on the concept of 'accessible emission limits' (AEL), which are defined for each class. Of specific note is that Class IIIa limits the output of all laser pointers to <5mW. Apparently, except under special conditions, it would be inappropriate to operate a laser pointer or illuminator that is classified above Class IIIa (e.g., Class IIIb or Class IV) without an FDA variance. However, although they cannot be promoted as Pointers, higher powered lasers, which operate substantially the same as Pointers, can be sold if properly marked.

The committee does not necessarily believe that export controls should need to conform to FDA regulations. However, the ability for a product to be offered in various geographical markets will dictate that these or similar regulations be adhered to.

It is also true that if used for Military or Law Enforcement, then higher powered pointers can be sold and used in the US. In some cases, these pointers and illuminators are being purchased on-line (e.g., http://www.ebay.com/bhp/ir-laser-illuminator) by night hunters and operated by consumers, thus violating FDA safety rules. Laser Devices, Inc., for example, asks website visitors if they are "civilian" or "military/law enforcement" (http://www.laserdevices.com/index.cfm/c-lasers_and_illuminators.htm)

In the broader case of Laser Illuminators (e.g., http://www.flir.com/cvs/cores/view/?id=52625), which might use laser diodes or a similar light source, but are not necessarily collimated (or very low divergence), the issue of safety is more difficult to define. In fact, such devices could be placed far from human reach (to avoid eye damage) and the light spread out over a larger area to reduce the irradiance level near populated areas. In this case, we do not believe that the broader export control category of illuminators should necessarily conform to any specific source power limit.

•*Militarily useful Characteristics:*
Pointers and illuminators for military applications can be distinguished from those intended for civilian applications in several ways. Military devices will generally have environmental hardening and the ability to integrate into larger systems (e.g., be a component or attachment, etc.). It is also true that the military will likely desire to use the pointers and illuminators over ranges that are longer than civilians. Law enforcement would likely desire these same sorts of distances.

•*Foreign Availability:*
Laser Illuminators, without a more specific definition, are seemingly difficult to control and the light sources, which themselves could be referred to as illuminators, are readily available and easy to find (e.g., http://www.roithner-laser.com/pricelist.pdf). Laser pointing and/or aiming devices that have been "specially designed" for military application seem to be clearly defined and available in many countries.

•*Additional Comments and Recommendations:*
Based on the Category XII Rewrite, Rev. 3, April 2012, the following language was provided:

> *XII(b)(2): "Laser aiming or laser illumination equipment, having an output wavelength exceeding 710 nm or an average or peak output power exceeding 5 mW;*
>
> *"Note: XII(b)(2) includes Multifunctional Aiming Lights (MFAL) and holographic or red dot weapon sights that incorporate lasers."*

The Lasers Subcommittee offers the following recommendations:

1) The definition of a Laser Illuminator and/or Laser Pointer need to clearly distinguish Lasers used for pointing (collimated laser output) in open air applications from other applications for which a more powerful infrared laser is useful (e.g., a scientific illuminator or pointer used, for example, to illuminate stimulate a sample under test.) Illuminators can be used for broad area illumination.
2) The proposed control does not take into account the differences in human eye sensitivity to NIR vs SWIR light. If this sort of specification is to stand (not recommended), then it should have some wavelength breakpoints.
3) Area illumination, differing from collimated illuminators (or pointers) should not be limited by the 5mW specification. Higher output powers over larger areas may be used in commercial security and surveillance applications.
4) There should be no limitations on basic laser diode or laser output power in other non-military applications because these are readily available and used commonly in a variety of applications.

We propose simply changing the language by appending "specially designed" to avoid any confusion or redundancy:

> *XII(b)(2): "Laser aiming or laser illumination equipment, having an output wavelength exceeding 710 nm or an average or peak output power exceeding 5 mW, <u>specially designed for military application(s)</u>;*
>
> *"Note: XII(b)(2) includes Multifunctional Aiming Lights (MFAL) and holographic or red dot weapon sights that incorporate lasers."*

<u>Laser Target Designators</u>

•*Description (Features and performance characteristics):*

Laser target designators seem to be military at their roots. They operate as part of a munitions guidance system when an operator points the laser designator at the target. The designator, for example, sends out pulses of laser light that the guided munition's seeker is looking for, then locks onto it. However, these might eventually be applied to unmanned robotic systems, for example, in the construction industry.

•*Militarily useful Characteristics:*

Similar to Laser Pointers and illuminators, the characteristics that are important for Laser Target Designators include: beam divergence, beam power, beam diameter, and temporal aglity – the ability to switch quickly and easily among a variety of temporal formats. In certain applications, beam polarization, beam wavelengths, efficiency/power consumption, size, mass, environmental hardening, and ability to integrate into a larger system are also important. The power and beam divergence are responsible for the useful range of the Target Designator.

In addition, a military Laser Designator should be environmentally hardened and, in all cases, specially designed for use with a larger system (in this case, the seeker on the munition).

•*Foreign availability:*

Foreign militaries have their own Laser Designators. There are NATO standards for Laser Designators.

•*Additional Comments and Recommendations:*
Based on the Category XII Rewrite, Rev. 3, April 2012, the following language was provided:

> *XII(b)(1): "Laser target designators or coded target markers"*

The committee finds that, based on current knowledge and understanding, "laser target designators or coded target markers" are inherently Defense Articles. However, it is not inconceivable that robotics technology as applied to construction sites will not eventually look to apply similar technologies to automate job site layout, material tracking, etc. Therefore, the committee recommends modifying the language to read;

> *XII(b)(1): "Laser target designators or coded target markers, specially designed for military application(s)"*

Laser Rangefinders
•*Description (Features and performance characteristics)*
Laser rangefinders (LRF) can work on a variety of principles, including 'time of flight (TOF)', Amplitude modulated LADAR, Frequency Modulated LADAR, etc. TOF is seemingly the simplest embodiment, which relies upon the fact that the speed of light is a constant in a medium of a given, constant index of refraction.

In the case of TOF, a laser pulse is emitted from the LRF. This pulse, travelling at 300 million meters per second, is reflected off of the target and (at least) some of the reflected/return light is captured by the LRF, which uses an avalanche photodiode (APD) or similar detector. By measuring the time between when the pulse is emitted to when the pulse is received, the range can be calculated. TOF systems are claiming 1m resolution, which means that the largest minimum time resolution must be on the order of a nanosecond. Our searches seem to indicate that the ranges that can be measured are in the range of 2m – 30km with commercially available TOF LRF.

LRFs are an inherently Dual-Use technology, with both civilian/commercial and military applications. Important performance characteristics of the lasers used in LRFs are: wavelength, pulse energy, pulse width/duration, rep rate, beam divergence, beam diameter, efficiency, size, mass, receiver sensitivity, max/min range, range resolution, and environmental hardening (in construction, surveying and similar applications).

To ensure that enough light is received in the return beam, the output pulse energy should be sufficiently high and the beam divergence should be properly selected based on the range. Sometimes, the return signal is correlated to the output signal through the use of polarization, pulse code, wavelength, etc.

Our searches found that LRFs are being sold commercially by companies like Nikon (http://www.nikon.com/products/sportoptics/lineup/laser/), seemingly to target golfers, hunters, and forest surveyers. These devices will measure range up to about 1km with a 1m resolution, are battery powered, and emit NIR light (800 – 900+nm). The Laser 1200 uses 870nm light, a pulse duration of 14ns, and a pulse power of 15W (~1nJ of pulse energy).

Leica Geosystems, an industrial metrology company, also offers LRFs tailored for their market. These can be found at (http://ptd.leica-geosystems.com/en/index.htm). These seem to integrate a camera and can control the output beam divergence to effectively target specific measurement points. They are using a red laser with a 1mW, 1ns pulse width and a beam divergence between 160 – 600nradians. MDL Laser systems (www.mdl-laser.com) manufactures laser modules for use in range finding applications. The applications range from aviation, collision avoidance, security, oil and gas, transportation. The devices are intended for altitude sensing, motion detection, speed measurements, bridge height surveying, virtual weighbridges, ship docking, etc. The devices are capable of maximum ranges up to 6000m.

We also found that FLIR offers LRF products: (http://www.flir.com/cvs/cores/view/?id=52631). These use eye-safe lasers (1535nm) with 2ns – 6ns pulse durations and pulse energies of 100nJ – 1mJ (50W – 170W).

Newcon Optik (http://www.newcon-optik.com/sentinel-3-6.html) has integrated a 2km range finder into their thermal IR binoculars, intended for perimeter security use. They offer LRF cores: (http://www.newcon-optik.com/lrf_Modules.html) with ranging out to >25km and using sources with wavelengths between 900nm – 1600nm (YAG). They state that intended uses are robots and self-moving mechanisms, automatic digital cameras, automatic traffic controllers and many similar appliances. They have Canadian-based R&D and Manufacturing.

Ascendent Group of Canada also integrates an optional 30km LRF into their thermal camera: http://www.ascendentgroup.com/store/specs/192.

•*Militarily useful Characteristics:*
When we consider use in construction, surveying, and outdoor science applications, the characteristics required for military use and civilian use are similar. However, if the system is "specially designed" for military application (e.g., by possessing the required interfaces to a military system), then it would clearly be a Defense Article.

Some examples of US Military, portable LRFs (http://www.fas.org/man/dod-101/sys/land/an-tvq-2.htm):

> AN/GVS-5: This is a handheld near infrared laser rangefinder, with one eye piece and weighs 5 lbs.
> AN/PAQ-1 Laser Target Designator (LTD): This is a near infrared laser rangefinder/designator used to obtain target range. It is also used with homing weapons such as the Copperhead 155 mm, HELLFIRE and Maverick missiles and guided bombs. They home in on a laser spot from this shoulder/ tripod-mounted1 16 lb. device.
> AN/TVQ-2 Ground/Vehicular Laser Locator Designator(G/VLLD): This near infrared laser is used in the same way as the (LTD), and is operated on a tripod mount or the Fire Support Team Vehicle. Its greater power and accuracy allow for spotting targets at greater distances. It weighs 52 lbs.

There are many more offered by Defense Contractors such as L-3 Warrior Systems, Elbit, etc.

•*Foreign availability*
There is ample foreign availability of LRFs and basic TOF technology is not extremely hard to implement. In fact, Leica, Newcon Optik, Ascendent, MDL Laser Systems, and Nikon are foreign entities.

•*Additional Comments and Recommendations:*
Based on the Category XII Rewrite, Rev. 3, April 2012, the following language was provided:

> *XII(b)(3): "(3) Laser rangefinders having range measurement using a single Q-switched laser pulse or range measurement exceeding 2000 m;"*

Although there are seemingly few, we have found commercial suppliers, both foreign and domestic, of LRFs with ranges far in excess of 2km (by one order of magnitude). Therefore, we are concerned with the proposed language and do not understand the rational for a LRF with range >2km being deemed a Defense Article. There are ample uses for LRFs with much longer range, especially when one considers the autonomous robot (e.g., UAS – air, ground, marine, and space) markets. For example, an LRF could be used as an inexpensive and safe altimeter and for situational awareness for private helicopters and fixed wing aircraft, which typically would make use of a range beyond 2000m.

We are also uncertain as to why a single Q-switch vs. passive Q-switch (e.g., a saturable absorber) would make an LRF a Defense Article. To better evaluate the language, we would like to understand if a "single Q-switched laser pulse" would correspond to a triggerable, rather than a repetitive pulse. If the belief is that the range could only be realized with a single Q-switch, this seems to be incorrect at the ranges that are considered here. Today's solid state lasers can easily do an order of magnitude better than 2000m. (i.e., one commercially available DPSS Laser, which is not advertised as an LRF, provides a divergence of 250µrad, a pulse energy of 50mJ over a 6ns duration at 1064nm. I can hold this in one hand. Based on the other specs, this can range quite far.

We would suggest, at a minimum, revising the language to read:

> *XII(b)(3): "(3) Laser rangefinders having range measurement using a single Q-switched laser pulse or range measurement exceeding 2000 m, <u>specially designed for military application(s)</u>;"*

<u>LADAR/LIDAR</u>
•*Description (Features and performance characteristics)*

•*Militarily useful Characteristics:*

•*Foreign availability*

•*Additional Comments and Recommendations:*

<u>Remote Sensing</u>
•*Description (Features and performance characteristics)*

•*Militarily useful Characteristics:*

•*Foreign availability*

•*Additional Comments and Recommendations:*

IRCM/EOCM

•*Description (Features and performance characteristics)*

Note: Committee understands these to be inherently Defense Articles, although Law Enforcement might also like to use them.

•*Militarily useful Characteristics:*

•*Foreign availability*

•*Additional Comments and Recommendations:*

Dazzlers

•*Description (Features and performance characteristics)*

Note: Committee understands these to be inherently Defense Articles, although Law Enforcement currently uses them at certain checkpoints.

•*Militarily useful Characteristics:*

•*Foreign availability*

•*Additional Comments and Recommendations:*

Directed Energy

•*Description (Features and performance characteristics)*

High power lasers are used for both commercial and defense applications. They can be either CW or pulsed. The lasers can be single mode or multimode lasers. The single mode and multimode lasers are selected for commercial applications depending on the application. For example welding application tend to use multimode lasers and cutting applications, requiring a clean cut, prefer to use SM lasers. For high energy laser weapons the beam quality is very important and therefore single mode lasers are desirable to achieve high brightness on the target at long distances. The power level and beam quality are needed for both industrial and defense applications and therefore cannot be the sole differentiating criteria for the USML.

For defense applications high power beams are desired. A single beam with the desired high power is preferred. A single laser providing this desired power is not always practicle or possible and in such cases beam combination techniques are employed to combine lower power individual elements to a high power beam. The lower power individual elements need to have some specific characteristics to enable beam combination. In addition to the power of the individual element and good beam quality the line width and polarization state of the laser are important parameters. Beam combination techniques employed include coherent or incoherent beam combination and spectral beam combination. Incoherent beam combination can handle lasers with broader line width, however, additional sophistication is needed in beam direction and corrections for effects such as atmospheric

turbulence. Coherent and spectral beam combination requires significantly narrower line width lasers than needed in several if not most commercial applications. While some commercial lasers may require narrow line widths, a suitable combination of power and line width may be appropriate for differentiating a defense article for a commercial laser.

•*Militarily useful Characteristics:*
In addition to the combined power and line width requirements discussed above, a significant requirement for defense lasers is the size weight and power (SWaP) combination. While it is always nice to have small compact lasers even for industrial applications, they are not a hard requirement as in the case of defense lasers. Consideration should be given to this as an additional delineating criteria for a defense areticle.

•*Foreign availability*
High power lasers are made in Europe, Russia and Asia. These can be both SM or MM lasers. The addition of line width and SWaP requirements would substantially reduce foreign availability of such specially designed lasers.

•*Additional Comments and Recommendations:*

Other comments on the Category XII Rewrite, Rev. 3, April 2012:
Above, we considered specific product categories that have specific military purpose and attempted to understand what characteristics make them Defense Articles. However, the Category XII Rewrite, Rev. 3, April 2012 document also includes (enumerates) other items that are not specifically Defense Articles, but provides technical specifications in order to try to define what would make the article a Defense Article.

Although it is true that the US Department of Defense has been the world's greatest supporter and investor in new technologies, the remainder of the world has begun to catch up. The rapid development of commercial technologies, often funded for use in specific applications by vast consumer economies all over the world, means that it is possible that commercial technologies might, by some metrics, already be exceeding military technologies, especially when we consider the rate of development in industries such as Semiconductors – it would be a very interesting study to understand the different rates of development in different industries and how policy and incentives impact that. We want our US Military to remain the most powerful in the world. Below, we offer some comments on the Category XII Rewrite, Rev. 3, April 2012 language.

•Targeting or target location systems

Rewrite Language:

> *XII(b)(4) "Targeting or target location systems or equipment incorporating a laser and GPS, compass or "inertial measurement unit" (IMU), and providing target localization data required for delivery of munitions;"*

We feel that this language is too broad, especially in light of the work being done in autonomous robots. For the safety of civilians, the update rate on GPS has been limited in past years and the accuracy purposefully degraded. However, by fusing other sensors with readily available low update rate GPS, very good geo-location is now possible and data rates that are capable of many things.

There is a major policy question for the United States that seems to need answering prior to proposing any revisions: Will the US policy be to enter into multi-lateral agreements on this topic in an effort to prevent such technology from being used inappropriately? Or will US policy take the position that these technologies are readily available, the likelihood of getting such multi-lateral deals done in a timely manner is slim, and therefore is might be better to focus on how to defend against these potentialities?

•Optical Augmentation Systems

Optical Augmentation is a method used to locate optical devices on the battlefield or in certain security applications. In one embodiment, light is pulsed and the return signal(s) imaged to determine the presence of other optical systems in the vicinity.

Rewrite Language:

> *XII(b)(5) "(5) "Optical augmentation" systems or equipment incorporating lasers;"*

We recommend, at a minimum, modifying this language as follows:

> *XII(b)(5) "(5) "Optical augmentation" systems or equipment incorporating lasers, specially designed for military application(s);"*

•Lasers for Electronic Attack Systems

As mentioned previously, there are some laser-based articles referred to by USML Category XI-Military Electronics.

Rewrite Language:

> *XII(b)(6) "Lasers for Electronic Attack (EA) systems or equipment controlled in Category XI;"*

While the committee does not have concerns with control of items that are clearly Defense Articles, this language is problematic because it seems to try to control *any laser*, whether commercial or otherwise, if it happens to be selected for use in EA Systems. It seems better to control the specific laser if it is a Defense Article as well as the EA System. In other words, the unintended consequence of the language would be to dissuade any commercial entity from providing a laser that they developed to the military for use in an EA System. This has a collateral unintended consequence of unduly increasing the development time and cost of development and deployment of Defense Systems, which is harmful to national security.

The committee recommends removing this control and enumerating controls for specific laser products.

•Tunable Individual Semiconductor Lasers

The committee would like the term "tunable" to be better defined. Almost all lasers can be tuned, owing to the fact that their line widths are not infinitesimally narrow. There is single line tuning, multi-line tuning, narrow- and wide-band tuning.

Rewrite Language:

> *XII(b)(10) "Tunable individual semiconductor lasers having an output wavelength exceeding 1,400 nm and an output power exceeding 1 W;"*

Toptica, for example, offers a high power diode laser at up to 1265nm with a tuning range of 15-70nm, a line width of 0.1 – 1MHz, and output power of 0.250 – 3W. (http://www.toptica.com/products/diode_lasers/research_grade_diode_lasers/high_power_amplified_diode_lasers.html)

Sacher of Germany is also a leader in high-power, tunable lasers with output powers over 1W, but wavelengths of just under 1100nm. (http://www.sacher-laser.com/home/scientific-lasers/high_power_tunable_lasers.html)

In any event, the committee does not believe that a 'tunable individual semiconductor lasers having an output wavelength exceeding 1,400 nm and an output power exceeding 1 W' necessarily warrants control as a munition. However, there might be good reason for control and if so, that control should be the same for our allies and partners (e.g., Wassenaar). Therefore, we recommend that a control remain under EAR (after definition of 'tunable' – see 6.A.5.c.3). If there are existing military lasers that meet these specifications, then the language should be amended:

> *XII(b)(10) "Tunable individual semiconductor lasers having an output wavelength exceeding 1,400 nm and an output power exceeding 1 W, <u>which are specially designed for military application</u>;"*

Otherwise, the existence of such a laser in a non-military setting would likely be 'released' under ITAR 120.41.

•Non-tunable Single Transverse Mode individual Semiconductor Lasers

There is a continuing open question related to the definition of a 'single transverse mode' (STM or TEM_{00}). The committee believes that this definition is important for Wassenaar, the EAR, and other control regimes. One possibility is to define STM with M^2 (ratio of BPP divided by BPP for a corresponding diffraction limited Gaussian beam).

Rewrite Language:

> *XII(b)(11) "Non-tunable single transverse mode individual semiconductor lasers having an output wavelength exceeding 1,510 nm and an average or continuous wave (CW) output power greater than 1 W;"*

Currently, CCL 6.A.5.d.1.a.2 controls these lasers at 500mW.

Rewrite Language:

> *XII(b)(12) "Non-tunable multiple transverse mode individual semiconductor lasers having an output wavelength equal to or greater than 1,900 nm and an average output or CW power greater than 2 W;"*

Currently, CCL 6.A.5.d.1.b.3 controls these lasers at 1W.

Are these proposing that higher power be considered as a Defense Article? If commercial applications arise needing a higher power single mode eye-safe semiconductor laser (e.g., pump lasers), then based on ITAR 120.41, the article would cease to be a Defense Article. Depending on how STM is defined, there might be commercially available lasers meeting this spec. However, in the meantime, there would be a very negative asymmetry of incentives for US business and other international business. US developers would likely avoid the investment because they might perceive that they could not get a high enough return. It would also chase commercial/civilian investors away from US suppliers. So, US developers might decide to move development off-shore. In the event that foreign availability existed and the 'release' of 120.41, Specially Designed, kicked in, there would be a large CJ process. Therefore, the committee does not believe that the broad language should be utilized. Instead, if there is a defense threat perceived, the language should be modified to read:

> *XII(b)(11) "Non-tunable single transverse mode individual semiconductor lasers having an output wavelength exceeding 1,510 nm and an average or continuous wave (CW) output power greater than 1 W, <u>specially designed for military application(s)</u>;"*
>
> *XII(b)(12) "Non-tunable multiple transverse mode individual semiconductor lasers having an output wavelength equal to or greater than 1,900 nm and an average output or CW power greater than 2 W, <u>specially designed for military application(s)</u>;"*

Doing this will help to remove any perverse (dis)incentives while keeping a control in-place through Commerce and Wassenaar.

•Laser Stacked Arrays

Stacked laser arrays are typically arrays of slabs of doped glass that are pumped to achieve high optical gain. The output of these arrays can be incoherently combined to achieve very high power laser output. With more effort, it might be possible to coherently combine outputs resulting in a much brighter beam, such as is being done with fiber lasers. Typical applications are industrial cutting, welding, drilling, heat treat, etc. These could also be used for directed energy weapons, which are controlled by USML <u>Category XVIII – Directed Energy Weapons</u>.

Rewrite Language:

XII(b)(13) Laser stacked arrays as follows:

(i) Having an output wavelength less than 1,400 nm and a peak pulsed power density greater than 3,300 W/cm2;

(ii) Having an output wavelength greater than or equal to 1,400 nm but less than 1,900 nm and a peak pulsed power density greater than 700 W/cm2;

(iii) Having an output wavelength greater than or equal to 1,900 nm and an average or CW output power greater than 20W or a peak pulsed power density greater than 70 W/cm2;

The language divides the laser color into three bins and sets peak pulsed power density limits. These stacked arrays typically have multiple transverse modes and the wavefronts also suffer from temperature variations in the gain medium/media. One important technical matter relates to how the peak pulsed power density is measured. For example, the beam could be expanded to get under the spec.

In any event, Wassenaar and the CCL control laser stacked arrays in the same manner, but at lower power density levels. These can be found in 6.A.5.d.1.d.1.d and 6.A.5.d.1.d.2.d, and 6.A.5.d.1.d.3 (no power density rating). There is no control for wavelengths greater than 1900nm, which is an active area of research and development as this is the next atmospheric window for use on earth.

As mentioned in prior sections, we do not feel that a redundant control, even with a higher power density is good policy. It deters US investment in research and development and encourages overseas investment – at least in countries that are not signatories to multilateral control regimes.

•US Government Funded Development
There is little argument that a program that is funded by the Department of Defense could be considered "Specially Designed". Therefore, unless an equivalent item already exists or comes into existence, without a review process, the Specially Designed item would remain controlled by the USML.

If we believe in competitive, capitalist markets, there seems to be a policy problem with this. It puts the company into the position of assessing whether doing work for the Department of Defense is a good financial idea…although for people on this committee, it has been great. However, large companies driven by purely financial interests may not continue to agree.

Therefore, the committee recommends a regular tri-agency review process to release Defense Articles or allow Dual-Use derivative products to be released to the markets when appropriate.

Attachment A: Fundamentals of Photonics: Lasers for Security and Defense, by Jeff Hecht

IR SITAC ROIC Subcommittee Draft Report

A. Introduction

This report is incomplete. However, it does provide a background report for understanding the technical issues, the relevant specifications for military and civilian applications, and the off-shore ROIC manufacturers (Section B, pg.3). The appendices include Tables of ROICs fabricated and sold by FLIR (Appendix A, pg 14) and the 1/21/13 SITAC letter concerning DTSA's Wassenaar Proposal for the Control of ROICS for IR FPAs (Appendix B, pg 21). This latter report points to the large public domain information associated with ROICs; Journal papers, Conference and Symposium papers and 500 patents. The summary of that report is also relevant to this report.

A.1. Legal Approaches to Category XII Rewrite

A.1.1. Current ITAR Regulations

Associating ROICs, or any other technology, with public domain information is legally important: 22 C. F. R is very clear on the relevance of public domain information to ITAR: public domain information such as technology set forth in published patents and patent applications and general scientific principles needed to apply the patent in practice, is <u>excepted</u> from and not subject to the ITAR. § 120.11 Public domain (a) *Public domain* means information which is published and which is generally accessible or available to the public:(1) Through sales at newsstands and bookstores; (2) Through subscriptions which are available without restriction to any individual who desires to obtain or purchase the published information; (3) Through second class mailing privileges granted by the U.S. Government; (4) At libraries open to the public or from which the public can obtain documents; (5) Through patents available at any patent office; (6) Through unlimited distribution at a conference, meeting, seminar, trade show or exhibition, generally accessible to the public, in the United States; etc.

A.1.2. New Specially Designed Rule

The legal relevance of Appendix A is in part related to the Specially Designed rule (22 C.F.R. § 120.41) which goes into effect in October. If ROICs or any other technology are captured in the category XII rewrite by a Catch-All phrase like "specially-designed for military use" then they are not subject to the ITAR if the technology: (3) Has the same function, performance capabilities, and the same or "equivalent" form and fit as a commodity or software used in a commodity that: (i) <u>is or was in production</u> (*i.e.*, not in development); and (ii) is not enumerated (this will probably be interpreted as parameterized) on the USML; (4) Was or is being developed with knowledge that it would be for use in both defense articles on the USML and also commodities not on the USML (as stated in your DoD contract for example); or (5) Was or is being developed as a general purpose commodity or software, *i.e.*, with no knowledge for use in a particular commodity or type of commodity.

The DTSA version of the Category XII rewrite relevant to this committee is: "Quantum detector" or "microbolometer" "focal plane arrays," and parts therefor, as follows:

(i) <u>"Focal plane arrays" having a peak response within the wavelength range exceeding 900 nm but not exceeding 30,000 nm;</u>

(ii) "Focal plane arrays" providing "charge multiplication" having greater than 1600 elements in any dimension, and having a maximum radiant sensitivity exceeding 50 milliamps per Watt for any wavelength exceeding 760 nm but not exceeding 900 nm;

(iii) "Read-out integrated circuits" for "focal plane arrays" controlled in this category;

These are clearly Catch-All phrases and at worst these should be rewritten with specially designed for military use in them so the community can get the benefit of Section 120.41; for example, "Focal plane arrays" having a peak response within the wavelength range exceeding 900 nm but not exceeding 30,000 nm specially designed for military use.

A.2. Parameterized Approach to the Rewrite

It is clear from Section B that ROICs are complex electronic technologies which are dependent on the application scenario. They are part of an interdependent electronic system composed primarily of the ROIC, detector array, drive and output electronics, control and algorithmic firmware and software. The receive optics is also an important component of this system. The challenge is to isolate the critical ROIC parameters, from the other subsystems, and set values which distinguish the military applications from the commercial, if possible. This committee has not yet agreed upon an approach but progress has been made. One relevant philosophy is that the more the technology can be cut up into a manageable, identifiable and understandable technical pieces the more commercial technology can be legitimately excluded from the ITAR. The following has been suggested:

1. Break the category into its naturally occurring components, SWIR, MWIR and LWIR and treat each separately.
2. Define a set of parameters for each category that are associated with the ROIC's performance or functionality. Most of the committee's conversations have been associated with SWIR and for that category the following parameters and straw man military thresholds have been suggested. The parameter set may also serve as a straw man set for MWIR and LWIR but with different thresholds and scenarios.
    a. Military Scenarios: Night vision with ambient SWIR and with continuous SWIR illuminators. Target designation with pulsed SWIR rangefinders
    b. Readout Type: Snapshot Mode. Exclude readouts that have no or diminished military scenario value, such as rolling mode integration or ROICs which cannot generate an acceptable image in the military scenarios. Sampling ROICs are an example of ROICs which cannot integrate long enough or whose duty cycle is too low to generate an image or have utility in the given scenarios.
    c. Sensitivity: Pixel area to noise ratio. Suggested threshold 6.31 um^2/e-rms
    d. Frame rate: Threshold of 60 Hz which can be limited to a lower frequency display mode by the camera
    e. Pixel Format: Threshold of 640 x 640 or 410,000 total pixels. Rationale may be foreign availability
    f. Power: ROICs that require cooling may be unsuitable for battery powered military systems. A straw man threshold has not been suggested.

B. Background Report (Reference: Doug Malchow with inserts by Dave Dozor)

General Comments:

Readout integrated circuits (ROICs) are key sub-components of infrared imaging sensors,cameras, and systems built around them. Generally speaking, they must be hybridized with sensing elements to make a focal plane array (FPA), and supported by camera electronics. However, there are non-hybridized designs (e.g., Ge-enhanced CMOS and MCT on Si). It is often the case that a prototype run (a dozen wafers or so) results in enough ROICs for a product lifetime with 'spares' used for development and other applications when possible. Due to high cost of design and fabrication and relatively small market volume, design tradeoffs and feature sets must be chosen to serve as many applications as possible. Otherwise the price per unit prevents consideration for any application. Thus, designs are inherently dual-use, considering civilian, homeland security, and military applications as the ROIC may be used in cameras with imaging lenses in scientific labs, industrial machine vision, portable handheld fire and rescue units, within automobiles or trucks or ships, or planes for driver/pilot vision enhancement, in surveillance pods, on rifle sights, in helmet mounted night vision goggles, or even inside spectrometers. Radiation hardening is one design and fabrication feature that makes a ROIC uniquely suited to government space and nuclear monitoring applications. Thus, it is rare for ROICs to be especially and uniquely designed for military or national security missions. ROICs can also be used with APD (avalanche Photodiodes) and other photo-active materials, with Laser Radar being one potential systems application.

Currently, although some report their ROICs a having been categorized as USML XII(e), ROICs, visible or infrared, are not listed on the USML or CCL as controlled items. The SITAC Infrared ROIC sub-committee believes that requiring export licenses for all ROICs will accomplish little as current controls on US made IRFPAs are tight. The effect of those controls over the past decade have convinced international customers to develop non-US sources for SWIR ROICs and FPAs, such as **Xenics** (Belgium , a spin-off of the consortium IMEC (Interuniversity Microelectronics Centre), **sInfraRed** (Singapore – owned by Xenics for low cost fab, development and Asian sales), the Alcatel-Thales **III-V fab** (France) , now owned by Sofradir (France), **New Imaging Technologies** (France – high dynamic range InGaAs ROICs), **New Infrared Technologies** (Spain – PtSi with 1 to 5 um range), **ChungHwa/Leading-Light** (Taiwan), **Semiconductor Devices** (SCD – Israel), and **Mikro-Tasarım** (Turkey – megapixel ROICs with 12.5 um pitch for InGaAs). Organizations in China have published papers at SPIE conferences discussing development of area array InGaAs detectors, such as **China Electronics Technology Group Corp.** (2009 – 320x256x25µm http://proceedings.spiedigitallibrary.org/proceeding.aspx?articleid=1339863) and **Shanghai Institute of Technical Physics** (China) working with **Vision Engineering Ltd**. (China – 2012 – 640x512x25µm - http://proceedings.spiedigitallibrary.org/proceeding.aspx?articleid=1477037) . This demonstrates that export controls on US made ROICs will not prevent or curtail global access to the technology.

However, the committee agrees that military (USML) controls are required for newly developed technologies that provide some sort of tactical or strategic advantage. The challenge is that unduly long and limiting export controls eventually serve to defeat that purpose, drive up DoD procurement costs, and for a variety of reasons put our armed forces at risk. Wherever a question exists a Commodity Jurisdiction and subsequent EAR export license application under the appropriate ECCN classification should be used to give the relevant agencies a chance to weigh in. Once a technology is older than three years or significant overseas availability arises, these technologies should transfer from the USML to the CCL. This would allow rational controls and allow US businesses to compete effectively.

Infrared detectors cover many different technologies and applications. This document will primarily feature discussions of SWIR and specifically InGaAs examples for illustrating the features of ROICs and their military or commercial applications.

Definitions:

A basic infrared ReadOut Integrated Circuit (ROIC) is a silicon CMOS integrated circuit designed to:

- Mate or hybridize with a detector array of sensors that convert infrared electromagnetic energy into electrical charges, such as a PIN photo-diode array, quantum dot array, or micro-bolometer, Note that because the detectors for the infrared are made from different materials than silicon (e.g., compound semconductors), hybridization of silicon CMOS ROICs to the compound semiconductor photodiode arrays has been the preferred means to fabricate IRFPA, in which differs from many visible and NIR sensors. Also note that CCD structures, where signals are shifted noiselessly across the surface of the image array, are not possible in infrared detectors.
- Accumulate the electrical charge into a measurable signal per unit time via a read cell (the combination of the sensor and ROIC read cell is also-known-as [aka] a pixel);
- Provide signal shaping, gain control, bandwidth control and sensor bias voltages to optimize measurement performance for multiple modes of operation that may be needed to serve a variety of applications;
- Provide sampling and timing circuits to multiplex the signals from the many individual sensors to be readout to external support electronics via a common signal path or paths (for parallel processing);
- Provide I/O circuitry to follow master control and timing signals from the external support electronics, while minimizing the number of external lines.

An advanced ROIC may add:

- Circuitry to minimize fixed pattern offset and gain differences between individual sensors, or between the ROIC read cells (non-uniformity correction is usually done external to the FPA)
- Digital convertors to enable the output of digital measurement values
- Circuits to permit smart adaptation of the ROIC to changing conditions or to application requirements (controls determined and applied by camera electronics)

- Algorithms or circuit modifications to significantly increase intra-scenic dynamic range via multiple sample periods, logarithmic amplifiers or other methods
- High-speed timing circuits to measure signal arrival time differences for each sensor instead of or in-addition to signal intensity
- Circuitry to bias and control high-bias voltages for avalanche photodiodes for range-gating, LADAR imaging, or ultra-low light level detection in passive illumination
- Circuitry to implement pseudo-time-delay-integration (TDI)

Fundamental design characteristics separating one ROIC design from another:

- **Imager format:** the number of rows and columns in the ROIC (matching the sensor format) on a repeating pitch dimension. The combination of pitch and format dictate the imager size, and when combined with lens optics, determine the imager field of view (FOV) and set the optical image sampling resolution (e.g., the number of pixels per Airy Disk).

  Two major format classes with current or future examples are:
  - 2-D (aka: area or matrix of columns and rows) such as 160x120, 320x240, 320x256, 640x480, 640x512, 1280x1024, 1280x720, 1920x1080. Pitch ranges from 5 to 60 microns
    - Military interested in large field of view (FOV) for context with fine pixel resolution to permit digital zoom to resolve hostile intent from distances of 0.1 to 20 km; can also be interested in largest pixel size for passive illumination sensitivity.
    - Commercial interest in high-resolution and field of view for SWIR microscopy for silicon IC and MEMs wafer inspection, biological imaging at key wavelengths, high-spatial and wavelength hyperspectral imaging. VGA resolution satisfactory for most uses, with some use of quarter-VGA for economy. However, VGA and 1280 resolutions required for many.

      Very low resolution micro-bolometer arrays provide economical price point for fire and rescue (160x120, 320x240) and some building inspection applications.
  - 1-D (aka: line or strip arrays of 1) such as 128x1, 256x1, 512x1, 1024x1, 2048x1, 4096x1 or 8192x1. Pitch ranges from 10 to 50 microns.
    - Military has limited interest in 1-D arrays as sensitivity limited (several times less than area cameras). To build an image of an equivalent FOV as an area camera captures in 1/30th of a second takes many times longer (by the number of lines in the virtual image if the same exposure time is used) for the 1-D camera limiting usefulness for most military missions. Some potential to use 1-D arrays in airborne 'pushbroom' imaging. 1-D arrays with square imaging pixels are currently restricted on the CCL for this purpose while tall imaging pixel types are EAR99.

- Commercial uses are for primarily for spectroscopy, which requires the pixel height to be 10 to 21 times the pixel pitch for maximum sensitivity. The larger pixel and need to design for large full well capacities for shot noise limited signal capture dictates the use of larger integration capacitors than used for area cameras, making the 1-D arrays less sensitive than 2-D arrays due to a higher read noise. As the market for 1-D arrays is limited, the same ROIC design is used for both tall and square pixels.

  Commercial machine vision applications for SWIR square pixel 1-D arrays are for inspection of hot hollow-bottles, metal coatings, agricultural products, paper products for moisture uniformity, recycled plastics and pharmaceutical products.

- **Readout type:** The design of ROIC pixel integration and readout operation architecture can vary in several respects. The design can either be rolling mode or snapshot mode, with either type including options for multiple taps, random access or integrate-then-read functionality.
  - **Rolling mode**, where the FPA is read out sequentially, one row or column at a time, and readout of a line starts the integration for the next frame. This imposes a time skew from the top to the bottom of the image that is detrimental to imaging moving objects or pulsed illumination
    - Military interests are limited as, other than less reactive power requirement (i.e., snapshot mode sees higher capacitance), there is no operational advantage over snapshot mode.
    - Commercial: Many microscopic inspection applications and art reflectography are compatible with rolling mode readout operation. In addition, in any application where the scene is known to change very slowly, a rolling mode ROIC will typically suffice.
  - **Snapshot mode**, where all pixels start and stop integration simultaneously
    - Military missions are usually from mobile platforms, image mobile targets, use pulsed illumination, or may need to capture encoded light flashes, and thus prefer snapshot ROICs/FPAs
    - Commercial applications include machine vision of moving product, automotive HOV lane imaging, scientific pump/probe laser imaging
  - **Multiple tap** (output) for reading portions of the array in parallel to increase full-image-frame readout rates (can be either rolling or snapshot) while limiting pixel readout bandwidth for lower noise; advanced ROICs may include ADC (digitizers) per column or sets of columns for this purpose. Note that most 2-D ROIC designs include 1-4 taps capability and the camera electronics designer chooses whether to provide ADCs for each tap.

- Military missions that need high frame rates for fast servo control of communications laser trackers, fast target trackers, adaptive optics guide star trackers, etc., or to provide wide FOV to helmet mounted viewers during rapid head movements, will require the fastest frame rate cameras
- Commercial applications for SWIR 2-D cameras rarely need higher than video frame rates. SWIR 1-D bio-medical imaging cameras require line rates of >100,000 fps with high resolution pixel arrays (>= 2048 pixels) to freeze patient movements. A related 2-D application that is developing will need >1 million pixel cameras with frame rates > 100 fps but at low gain. This will need ROICs with multiple taps.

- **Random access** switching to readout one or more regions of interest (ROI). When data flows through a single or small number of ADCs (whether in the external electronics or within the ROIC) at a fixed pixel rate, the frame rate of the ROI goes up. A common feature of current designs.
  - Military missions that use this common feature may enable fast tracking of communications lasers, guide stars, or missiles from fixed or mobile platforms.
  - Some commercial communications laser tracking and adaptive optics imaging may use this feature.
- **Integrate-then-read** circuits add sampling circuitry to transfer signals from the pixel integration element to an intermediate stage to permit start of integration for image frame 'n+1' while readout of image frame 'n' proceeds. This minimizes dead time between frames. This design feature is standard in most 1-D and 2-D SWIR ROICs on the market, except for older 1-D devices. Both commercial and military applications prefer this capability to minimize dead time between images.
- **Correlated double sampling (CDS)** is an optional feature used when a reset switch is used to initialize the voltage across the integration capacitor prior to a new measurement. When the switch opens, the voltage across the capacitor will settle to a random value. CDS samples the value at the beginning of the exposure period and that value is then subtracted from a second sample taken at the end of the exposure period. CDS is used on all SWIR CTIA designs unless the exposure period is very short. (Correlated Multiple Sampling (CMS), similar to CDS, but sampling multiple times at the beginning and then at the end, is applied to further reduce the effects of read noise (i.e., in theory, the noise will decrease as sqrt(1/n), at the sacrifice of image latency.)

Sensor materials, their associated wavelength ranges and sensor conversion types. The material governs the detection wavelength range, with variations of material preparation, formulation and illumination direction (front or back-illumination) limiting response to a subset of the maximum range shown in the table below. The D* (detectivity), dark current generation as a function of sensor temperature, and transducer

type require significant differences in the readout unit cell design. This limits the ability of one ROIC design to serve different material and transducer types, particularly when optimizing performance for specific applications. Examples of sensor materials and transducer types, with associated maximum wavelength response ranges are shown in the table:

Material type	Transducer type	Max. Spectral range (µm)	Wavenumber (cm-1)
Indium gallium arsenide(InGaAs)	photodiode	0.4–2.6	25000–3800
Germanium	photodiode	0.35–1.7	12500–5900
Lead sulfide (PbS)	photoconductive	1–3.2	10000–3200
Lead selenide (PbSe)	photoconductive	1.5–5.2	6700–1900
Indium antimonide (InSb)	photoconductive	1–6.7	10000–1500
Indium arsenide (InAs)	photovoltaic	1–3.8	10000–2600
Platinum silicide (PtSi)	photovoltaic	1–5	10000–2000
Indium antimonide (InSb)	photodiode	1–5.5	10000–1800
Mercury cadmium telluride (MCT, HgCdTe)	photoconductive	0.8–25	12500–400
Mercury zinc telluride (MZT, HgZnTe)	photoconductive		
Lithium tantalate (LiTaO3)	pyroelectric	The range of pyroelectric detector is determined by the window materials used in their construction.	
Triglycine sulfate (TGS and DTGS)	pyroelectric		
various materials such as amorphous silicon or vanadium oxide as thermal absorbers driving resistive or capacitive transducers to create variation in electrical signal	uncooled micro-bolometer	7.5–14	1333–715

Source: http://en.wikipedia.org/wiki/Infrared_detector

- Military is interested in InGaAs sensor arrays for day and night imaging battlefield targeting lasers, range-finders, guide stars, including those with eye-safe higher power wavelengths at 1.31 and 1.55 µm, and covert illumination at those wavelengths. General surveillance with or without covert illumination 24 hrs/7 days for force perimeter, driver situational awareness. Also used for seeing through haze at long distances, seeing through light fog, dust and smoke that obscures vision for shorter wavelength cameras, detecting some types of camouflage in various conditions. Used in fusion with other wavelength band imagers to identify items detected by thermal cameras, or to better detect chemical signatures associated with munitions or IEDs, or to image while LWIR detection limited by thermal transition of the ambient temperatures from day to night or the opposite.

Military interest in ROICs designed for MWIR and LWIR sensor arrays for detecting people and/or animals due to their elevated temperature compared to the surroundings

and to detect operating or recently operated vehicles based on their heat signature. Developing HD resolution for higher performance, identification of hostile intent. Also developing multispectral fusion with SWIR or visible imagers for same reason as listed above.

- Military interests exist in new Band Gap Engineered photodiode arrays, such as Type 2 SuperLattice (T2SL), Quantum Well Infrared Photodiodes (QWIPs and C-QWIPs), and others due to their ability to be operated at warmer temperatures, have their band gaps tailored (i.e., alter the range over which they are photoactive – width and center wavelength), etc.
- Military interests exist in 3rd Generation ROICs and FPAs. These include multi-color FPAs (e.g., stacked MWIR/LWIR MCT, T2SL, etc.), large format FPAs (over 1 Mpixel), on-ROIC digital circuitry (e.g., A/D in-pixel, digital well-depth enhancement, etc.)
- Commercial interests in SWIR are for spectroscopy, spectral contrast on materials due to absorbance molecular vibrations for machine vision inspection and sorting, biomedical imaging in tissue, imaging defects inside hot glass, silicon semiconductors, civil auto and truck vision enhancement, business jet pilot vision enhancement, port security and management in conditions of haze and light fog, hyperspectral imaging of agricultural growing fields. Some possibility exists to integrate filters that exclude key military wavelengths. High line array resolution needed for better spectral resolution.
- Commercial interests for MWIR and LWIR imagers are for fire and rescue, hot or cold spot detection in electrical panels, pump systems, air conditioning systems, building energy leakage detection, gas leak detection. Usually accepts low resolution for lower cost.

- **Sensors interconnect to ROIC:** How the sensor array is connected to the ROIC is usually via a physical and discrete electrical connection as different material systems are in each. Interconnect method not specific to military or commercial applications through direct deposit technology may permit higher resolution in the future.
  - **Bump hybridization:** The typical infrared detector interconnect type with pixelated sensor 2-D arrays is with conductive bumps on the surface of the ROIC mating with front side (processing side) bumps on the back-illuminated sensor array pixels. Smaller pixel pitch InGaAs 1-D arrays are now being made with bump interconnects to back-illuminated sensor arrays.
  - **Direct deposit**: Some examples of direct deposit of infrared detectors on ROIC devices have been offered (Ge on Si and MCT on Si) in the marketplace. This may increase in the future if volume develops to drive development of wafer scale production of FPAs and to achieve ultra-small pixel sizes.

- **Wirebond:** The typical interconnect type for 1-D arrays is wire bonds to an adjacent strip of sensor array pixels, with 25 or 12.5 μm pixel pitch achieved by using two ROICs, one on each side of the sensor array.

- **ROIC pixel unit-cell design type:** The circuit receiving the signal from the sensor array must be a good match both the sensor material type and the application requirements to achieve the best performance. The unit-cell provides detector bias, signal shaping, signal quantification, and signal transfer to subsequent stages, while striving for low noise, low power consumption, high linearity across the range of photon flux levels experienced in the application, and wide dynamic range, while serving applications with a wide range of timing requirements. Factors like material dark current, FPA operating temperature range, resistivity, sensor pixel capacitance, interconnect impedance, along with associated noise sources influence the choice of unit-cell design type. By itself, unit cell design is independent of military or civil applications. Common designs include (source of information: http://trs-new.jpl.nasa.gov/dspace/bitstream/2014/35593/1/93-1313.pdf) :
  - Source follower
  - Direct injection and buffered direct injection (DI and BDI)
  - Gate modulated and buffered gate modulated (GMOD and BIGM)
  - Cascode Amplifier
  - Capacitance Transimpedance Amplifier (CTIA)

- **Pixel Types**: The electrical circuit resident in each pixel of a ROIC is responsible for determining the irradiance on each photo-active pixel element. This circuit depends upon the type of photoactive element (e.g., Bolometers are photo/thermoresistive, while PIN arrays are photovoltaic or photoconductive). Note that the notion of 'frame rate' is considerably different for a microbolometer array than a PIN, array because the bolometer array reaches a steady state resistance (and temperature) after a short lag period. If that period is very short, it enables very high frame rate imaging to be performed.

  The mechanism for photovoltaic and photoconductive devices (e.g., PIN diodes) is quite different. For PIN diode arrays, typical ROICs include an integration capacitor, although very low-light level devices have used other resident capacitances. The integration capacitor depends on how quickly photons are converted to electrons. In other words, given a PIN diode quantum efficiency (QE) and the level of irradiance (photons-s^{-1}-cm^{-2} or W-cm^{-2}), the integration capacitor (or set of capacitors) is (are) sized such that it (they) will not be saturated during any single frame. Due to radiation from the earth and objects on it, which are typically near T = 300K, overall irradiances are typically greatest for LWIR (8μm - 14μm), then MWIR (3μm - 5μm), then SWIR (1μm – 2.5μm), where they are exceedingly low, except in sunlit or other illuminated applications. Note that in sunlight VIS irradiances are quite high due to reflected sun radiation. This sets a desired integration capacitor size and limits layout available for the pixel circuit. The technology node, which sets the minimum transistor gate length, and the capacitor size are critically important for low light level designs. Typically speaking, LWIR needs the largest

integration capacitors and passively illuminated SWIR needs the smallest integration capacitors. A group of pixel circuits are briefly described.

- **Source Follower per Diode (SFD)**: This circuit type is typically used for low frame rate, low light level ROICs. The circuit dissipates no active power during integration. Due to its simplicity it will experience non-linearity with larger integration capacitances. The circuit *requires* the application of CDS or CMS due to fixed pattern noise, which can be implemented in the cell due to available layout real estate. Therefore, it is typically relegated to scientific applications and is quite useful for low frame rate, long-integration, low light level applications. (Examples: Teledyne/Rockwell's NICMOS, PICNIC, HAWAII; Infrared Laboratories/Valley Oak ULN, Infrared Laboratories/Infrared Newco A600; others.)
- **Direct Injection (DI):** This circuit was the 'workhorse' for many early LWIR ROICs owing to its small circuit size, which leaves plenty of real estate for integration capacitance. The circuit is also less susceptible to photodiode bias variations during integration. At low signal levels, the circuit suffers from poor injection efficiency. It is generally, therefore, used in high background applications. (Examples: ISC9705/9803, ISC0208/9901, ISC0006/0402/0403/0404, proprietary designs)
- **Buffered Direct Injection (BDI):** This circuit is like DI, but includes an inverting gain stage between the photodiode and the injection transistor. This provides better control at low flux levels. However, the cell now dissipates active power during integration. Therefore, the BDI pixel, which uses more layout real estate to gain advantages over DI and SFD at low light levels, cannot carry as much pixel integration capacitance. In addition, it typically suffers from noise at low flux levels. This circuit, for obvious reasons, has been used with many MWIR photodiode arrays.
- **Capacitive Transimpedence Amplifier per Diode (CTIA):** The CTIA has rapidly become the pixel of choice for SWIR applications. It consists of an inverting amp (early ones were cascade amps) with the integration capacitor(s) in the feedback path. The amp can be single-ended or differential, with differential amplifiers offering application utility and lower noise at the expense of greater layout area. The CTIA is active and consumes power during integration, but specialized circuits have been designed to minimize dissipated power. The CTIA, in its simplest embodiment, provides high sensitivity and low noise at the expense of larger pixels (or smaller integration capacitors/limit on irradiance) and higher power dissipation. Therefore, for PIN arrays to be operated at higher frame rates in low-light/passively illuminated environments, CTIA has become the pixel of choice. (Examples: ISC9809, ISC0002, ISC9802(linear), proprietary designs)
- **Other Types:** Gain Modulation (GMOD or GMI), Cascode Amplifiers, etc.

- **Radiation hardening:** Silicon ROIC performance is subject to degradation if exposed to radiation damage, a hazard that may result from space missions with long dwell times in proximity to planetary radiation belts, the sun, or for terrestrial missions in nuclear power stations. Fabrication of the ROICs in special foundries and by following special design rules can minimize the degradation. This is known as radiation hardening. Generally, this capability is unique to military needs, though may be of use to civil satellites for communications, navigation, weather, and crop health applications.

Specific Items and performance metrics

By ROIC format Categories:

Infrared 2-D (aka matrix or area imaging) ReadOut Integrated Circuits (ROICs) for InGaAs sensor arrays.

a.) Description of product type: Integrated circuits with sensor formats of multiple rows and columns designed to image electromagnetic radiation via a detection mechanism that converts the radiation into an electrical signal that is measured for each pixel, with the values for pixel multiplexed into a signal path for output to external camera electronics.

b.) Typical performance specifications: read noise proportionate to pixel size, at video frame rates, as proxy for minimum detectable signal. Imaging format and pixel size, combined with lens system in front of the imager, define the field of view (FOV) and resolution within the FOV.

c.) Military Specifications:

Current license provisos for limiting InGaAs camera sensitivity for general applications have established that cameras requiring tighter control are those with <= 200 e- rms temporal system noise for 25 µm pixel pitch at the maximum exposure time at video frame rates. The ratio of this pixel collection area to the system noise is 3.125 (μm^2/e- rms). Concern has been stated that hostile forces could use cameras with greater sensitivity to detect US/Allied use of eye-safe illuminators, which would otherwise be covert to standard night vision goggles. State of the art 25 µm pixel camera noise floors with minimal frame lag are available with < 35 e- rms noise floors (for a ratio of 17.8). Development work on smaller pixel, higher resolution ROICs has not been able to match this sensitivity metric, with SUI recently reaching system noise of 35 e- for a 12.5 micron pixel with a format of 640 x 512. This produces an area/noise ratio of 4.5, equivalent of a system noise of 139 e- for a 25 µm pixel size. (Note: system noise includes dark current noise at the most sensitive operating mode of the camera electronics).

Current maximum InGaAs ROIC format sizes are 1280 x 1024 with 15 or 12.5 µm pitch, with rumors of HD formats of 1920 x 1080 in development. MWIR and LWIR ROICs with the EHD format of 1280 x 720 are also available, with a DARPA/DRS program for 5 micron pixels announced.

ROIC power consumption may be a factor for battery powered handheld or ultra-light UAV applications, though thermo-electric cooling requirements may dominate the ROIC power draw. Civil applications usually are not power constrained and plug an adapter into the AC power grid.

Infrared 1-D (aka line arrays imaging or spectroscopy) ROICs for InGaAs sensor arrays.

d.) Description of product type:

Integrated circuits with sensor formats of one rows and multiple columns designed to image electromagnetic radiation via a detection mechanism that converts the radiation into an electrical signal that is measured for each pixel, with the values for pixel multiplexed into a signal path for output to external camera electronics.

e.) Typical performance specifications:

Read noise proportionate to pixel size, at video frame rates, as proxy for minimum detectable signal. Imaging format and pixel size, combined with lens system in front of the imager, define the field of view (FOV) and resolution within the FOV. For spectroscopy applications the pixel height is typically 10 to 21 times taller than the width.

f.) Military Specifications:

Pixels whose height is less than 3.8 times their width can be used for 'pushbroom' imaging. However, compared to area pixels, the ratio of square pixel area to temporal noise is usually less than 2 and frequently less than 1. This significantly limits the potential for military missions.

Appendix A FLIR ROICs (Reference Dave Dozor)

Large-Format Readout Integrated Circuits

Standard Readout Integrated Circuits –

at the heart of today's high-resolution IR systems

Readout Integrated Circuits
If you're designing high-resolution infrared imaging systems, Indigo's line of large-format Standard Readout Integrated Circuit (ROIC) products provide an off-the-shelf solution for the most demanding applications. Where requirements call for low noise, variable charge storage capacitance, selectable integration times, adjustable gain and power settings, all with a simple user interface, our mixed-signal ROICs offer a proven design without the schedule, resources and risk of a product development task.

ROICs in wafer form with test data C**Product Offering**

We offer a family of large-format arrays, including the ISC9803, ISC0002, ISC9901, ISC0402, ISC0403 and ISC0404. These arrays make excellent imagers for high-performance IR systems and are used in many advanced commercial and military products. The ISC0404 is our initial 1K x 1K standard array, setting the industry standard for highest-resolution IR focal plane arrays.

• Formats including 640 x 512 and 1024 x 1024 elements• Electrical interfaces and features are common between arrays• Designed for use with infrared detectors such as InSb, QWIP and InGaAs• Evaluation electronics kits available for use with the ISC9803

Pixel Pitch
Our large-format arrays include a variety of pixel pitches, from 25 to 15 microns, for customers with a wide range of optical designs, dewar/cooler configurations and resolution requirements.

The ISC0403, with a 15-micron pixel pitch and 640 x 512 format, is identical in size to the industry standard ISC9705, our 320 x 256, 30-micron pitch array. This size matching eases systems upgrade from mid- to large-format resolution.

Using an 18-micron pixel pitch for our 1K x 1K ISC0404 design provides high performance, large well size and non-stitched silicon fabrication. Two well size options are available for the 1K design and also for the 20-micron 640 array, the ISC0402. These options are fabricated separately at the silicon wafer level.

Delivery
Standard ROIC devices are delivered in wafer form, probe tested and labeled according to pass/fail criteria. Test data is included on CD-ROM for each device. A User Guide is provided that describes all device electrical interfaces. A Mechanical Interface Database provides the layout information needed by customers to design their detector interface. If our standard ROIC products can't meet your requirements, we offer full custom design services, from trade study through design and fabrication of wafers.

If our Standard ROIC products do not meet your requirements, we offer full custom design services from trade study through fabrication of wafers.

Specifications

	ISC9603	ISC0602	ISC9601	ISC0402	ISC0403	ISC0404
Array Size	640 x 512	640 x 512	640 x 512	640 x 512	640 x 512	1024 x 1024
Pixel Pitch	25 µm	25 µm	20 µm	20 µm	15 µm	18 µm
Operating Temperature	80K to 310K	80K to 310K	80K to 310K	80K	80K	80K
Detector Bias Range (Idet = 1nA)	0 to 0.5V	0 to 2.5V	0 to 0.5V	0 to 0.5V	0 to 0.5V	0 to 0.5V
Detector Bias Resolution	5mV	External adjust.	5mV	5mV	5mV	5mV
RoAd Min.	≥ $1x10^{9}$ Ω·cm²	≥ $1x10^{9}$ Ω·cm²	≥ $1x10^{9}$ Ω·cm²	> $2x10^{9}$ Ω·cm²	≥ $1x10^{9}$ Ω·cm²	≥ $1x10^{9}$ Ω·cm²
Detector Capacitance Max	≤ 0.5pF	≤ 0.05pF	≤ 0.5pF	≤ 0.04pF	≤ 0.1pF	≤ 0.1pF
Well Capacity (Min – Max Gain)	11.2 $x10^{6}$ 8.4 $x10^{6}$ 5.6 $x10^{6}$ 2.8 $x10^{6}$	2.5 $x10^{6}$ 93 $x10^{6}$	7 $x10^{6}$ 5.2 $x10^{6}$ 3.5 $x10^{6}$ 1.8 $x10^{6}$	11 $x10^{6}$ Option 1 3.0 ± 0.5 $x10^{6}$ Option 2	5.5 $x10^{6}$	12 $x10^{6}$ Option 1 2.5 ± 0.5 $x10^{6}$ Option 2
Input Current (Min, Nom, Max)	1pA 1nA 10nA	0.01pA 1pA 50nA	1pA 1nA 10nA	1pA 0.5nA 10nA	1pA 0.5nA 10nA	1pA 0.5nA 10nA
ROIC Noise (Min. Gain)	≤550e-rms*	≤ 360e-rms *	≤ 350e-rms*	≤ 1270e-rms * Option 1	≤ 760e-rms*	≤ 1026e-rms* Option 1
ROIC Noise (Max. Gain)	≤350e-rms*	≤ 70e-rms *	≤ 200e-rms*	≤ 368e-rms * Option 2	N/A	≤ 282e-rms* Option 2
Output Range	2.5V	2.5V	2.5V	3V	2.0V	2.0V
Output Interface (R_{out}, C_{out})	> 100 kΩ ≤ 25pF	> 100 kΩ ≤ 25pF	> 100 kΩ ≤ 25pF	> 100 kΩ ≤ 18pF	> 100 kΩ ≤ 15pF	> 100 kΩ ≤ 18pF
Pixel Rate	10MHz	10MHz	10MHz	12.5MHz	12MHz	12.5MHz
Full Frame Rate (1 output)	30Hz	30Hz	30Hz	> 30Hz	> 30Hz	> 30Hz 4-output
Full Frame Rate (2 outputs)	58Hz	58Hz	55Hz	> 60Hz	> 60Hz	> 60Hz 8-output
Full Frame Rate (4 outputs)	107Hz	107Hz	97Hz	> 120Hz	> 120Hz	> 120Hz 16-output
Power (1 output)	≤ 90mW	≤ 225mW	≤ 90mW	≤ 50mW	≤ 50mW	≤ 72mW 4 output
Power (4 outputs)	≤ 180mW	≤ 325mW	≤ 180mW	≤ 89mW	≤ 77mW	≤ 190mW 16 output
	*Tint=5msec, T=80K Cint = 0.3pF RoAd=$5x10^{9}$Ω·cm²	*Tint=5msec, T=350K Det Bias = 0.5V Cint = 50fF RoAd=$1x10^{9}$Ω·cm²	*Tint=2.48msec,T=80K Cint = 0.3pF RoAd=$5x10^{9}$Ω·cm²	*Tint=5msec, T=80K Cint = 50fF RoAd = $2x10^{9}$Ω·cm²	*Tint=5msec, T=80K Cint = 0.1pF RoAd = $1x10^{9}$Ω·cm²	*Tint=5msec, T=80K Cint = 100fF RoAd = $1x10^{9}$Ω·cm²

Specifications

	ISC9803	ISC0002	ISC9801	ISC0402	ISC0403	ISC0404
Array Size	640 x 512	640 x 512	640 x 512	640 x 512	640 x 512	1024 x 1024
Pixel Pitch	25 µm	25 µm	20 µm	20 µm	15 µm	18 µm
Operating Temperatures	80K to 310K	80K to 310K	80K to 310K	80K	80K	80K
Detector Bias Range (Idet = 1nA)	0 to 0.5V	0 to 2.5V	0 to 0.5V	0 to 0.5V	0 to 0.5V	0 to 0.5V
Detector Bias Resolution	5mV	External adjust.	5mV	5mV	8mV	5mV
RoAd Min.	≥ $1x10^{7}$ Ω·cm²	≥ $1x10^{7}$ Ω·cm²	≥ $1x10^{7}$ Ω·cm²	> $2x10^{4}$ Ω·cm²	≥ $1x10^{7}$ Ω·cm²	≥ $1x10^{7}$ Ω·cm²
Detector Capacitance Max	≤ 0.5pF	≤ 0.05pF	≤ 0.5pF	≤ 0.04pF	≤ 0.1pF	≤ 0.1pF
Well Capacity (Min – Max Gain)	11.2 $x10^{6}$ 8.4 $x10^{6}$ 5.6 $x10^{6}$ 2.8 $x10^{6}$	2.5 $x10^{6}$ 93 $x10^{6}$	7 $x10^{6}$ 5.2 $x10^{6}$ 3.5 $x10^{6}$ 1.8 $x10^{6}$	11 $x10^{6}$ Option 1 3.0 ± 0.5 $x10^{6}$ Option 2	6.5 $x10^{6}$	12 $x10^{6}$ Option 1 2.5 ± 0.5 $x10^{6}$ Option 2
Input Current (Min, Nom, Max)	1pA 1nA 10nA	0.01pA 1pA 50nA	1pA 1nA 10nA	1pA 0.5nA 10nA	1pA 0.5nA 10nA	1pA 0.5nA 10nA
ROIC Noise (Min. Gain)	≤550e-rms*	≤ 360e-rms *	≤ 350e-rms*	≤ 1270e-rms * Option 1	≤ 760e-rms*	≤ 1026e-rms* Option 1
ROIC Noise (Max. Gain)	≤350e-rms*	≤ 70e-rms *	≤ 200e-rms*	≤ 368e-rms * Option 2	N/A	≤ 282e-rms* Option 2
Output Range	2.5V	2.5V	2.5V	3V	2.0V	2.0V
Output Interface (R_{out}, C_{out})	> 100 kΩ ≤ 25pF	> 100 kΩ ≤ 25pF	> 100 kΩ ≤ 25pF	> 100 kΩ ≤ 18pF	> 100 kΩ ≤ 15pF	> 100 kΩ ≤ 18pF
Pixel Rate	10MHz	10MHz	10MHz	12.5MHz	12MHz	12.5MHz
Full Frame Rate (1 output)	30Hz	30Hz	30Hz	> 30Hz	> 30Hz	> 30Hz 4-output
Full Frame Rate (2 outputs)	58Hz	58Hz	55Hz	> 60Hz	> 60Hz	> 60Hz 8-output
Full Frame Rate (4 outputs)	107Hz	107Hz	97Hz	> 120Hz	> 120Hz	> 120Hz 16-output
Power (1 output)	≤ 90mW	≤ 225mW	≤ 90mW	≤ 50mW	≤ 50mW	≤ 72mW 4 output
Power (4 outputs)	≤ 180mW	≤ 325mW	≤ 180mW	≤ 80mW	≤ 77mW	≤ 130mW 16 output
	*T=-2msec, T-80K Det = 0.3pF RoAd=5x10^{7}Ω·cm²	*T=-5msec, T-250K Det Bias – 0.5V Det = 50fF RoAd=1x10^{7}Ω·cm²	*T=-2.48msec,T-80K Det = 0.3pF RoAd=5x10^{7}Ω·cm²	*T=-2msec, T-80K Det = 50fF RoAd = 2x10^{7}Ω·cm²	*T=-2msec, T-80K Det = 0.1pF RoAd = 1x10^{7}Ω·cm²	*T=-2msec, T-80K Det = 100fF RoAd = 1x10^{7}Ω·cm²

Mid-Format Readout Integrated Circuits

Standard Readout Integrated Circuits – at the heart of today's vision systems

Readout Integrated Circuits

If you're designing imaging systems for Infrared, Visible, Ultraviolet, X-ray, or Gamma Ray detection, FLIR's mixed-signal Readout Integrated Circuits (ROICs) offer a proven design, without the schedule, resources, and risk of a custom development. Our line of ROIC products provides an off-the-shelf solution for applications requiring low noise, variable charge storage capacitance, selectable integration times, adjustable gain and power settings, and a simple user interface.

ROICs in wafer form with test data CD

2-Dimensional Arrays

We offer a family of 2-dimensional mid-format arrays including the ISC9705, ISC9809, ISC0208, ISC0006, and ISC0207.

These arrays make excellent imagers for camera products, and are used in Indigo's Alpha NIR, Cumulus and Phoenix IR cameras. The ISC9809, with ultra-low noise and low background sensitivity, is ideal for spectroscopy and astronomy applications. It's also compatible with ultra-violet and visible sensors.

- Formats including 320 x 256, and 384 x 288 elements
- Designed for use with infrared detectors including InSb, QWIP and InGaAs
- Common electrical interfaces and features
- Evaluation electronics kits available for use with ISC9705

Linear Array

Our linear array, the ISC9802, is a 512 x 1 device for photodiodes. It is ideal for use in spectroscopy systems and DWDM channel monitors.

- Supports both wire- and bump-bonding detector interfaces
- User-configurable as a 512 x 1, 256 x 1, or 128 x 1 array
- Low noise, low input impedance front end, correlated double sampling stage, and wide range of selectable integration capacitors

X-ray Devices

The ISC9717, our 128 x 1 ROIC for X-ray detection systems, offers the ultimate in flexible architecture. It supports applications involving digital radiography, mammography, fluoroscopy, angiography, tomography, non-destructive testing, or industrial instrumentation.

The ISC9717 is ideal for X-ray medical imaging applications, from high-resolution radiography in single frame mode to fluoroscopy with up to 30Hz frame rates.

• Designed for use with Se, CsI, Si, Amorphous Si, GaAs, and CdZnTe detectors
• Adjustable parameters for integration capacitor selection, low-pass filter time constant, gain, integration mode, ADC resolution, and readout direction
• Designed for abutting multiple chips to read out large array flat panel X-ray detector panels
ISC9717

Delivery
Standard ROIC devices are delivered in wafer form, probe tested and labeled according to pass/fail
criteria. Test data is included on CD-ROM for each device. A User Guide is provided that describes
all device electrical interfaces. A Mechanical Interface Database provides the layout information needed by customers to design their detector interface.
If our standard ROIC products do not meet your requirements, we offer full custom design services,
from trade study through design and fabrication of wafers.

Standard Readout Functions

	ISC9705	ISC9809	ISC0208	ISC0006	ISC9802 (linear array)	ISC9717 (linear X-Ray)
Array Size	320 x 256	320 x 256	394 x 288	320 x 256	512 x 1 (256 x 1, 128 x 1)	128 x 1
Pixel Pitch	30 µm	30 µm	25 µm	40 µm	25 µm, 50 µm, 100 µm	80 µm
Input Circuit	Direct Injection	CTIA	Direct Injection	Direct Injection	CTIA	CTIA
Integration Type	Snapshot mode	Snapshot mode	Snapshot mode	Snapshot mode	Snapshot mode	Snapshot mode
Integration Time	Adjustable integration time > 5 µs	Adjustable integration time > 0.5 µs*	Adjustable integration time > 0.6 µs	Adjustable integration time > 58 µs	Adjustable integration time > 0.2 µs	Adjustable integration time 34 µs to few ms
Integration Modes	Integrate-While-Read Integrate-Then-Read	Integrate-While-Read Integrate-Then-Read Non-destructive readout Continuous integ. with multiple readout	Integrate-While-Read Integrate-Then-Read	Integrate-Then-Read	Integrate-While-Read Integrate-Then-Read	Integrate-While-Read Integrate-Then-Read
Gain Adjustment	2 bit (1, 1.3, 2 or 4x)	1 bit (1, 20x)	2 bit (1, 1.3, 2 or 4x)	2 bit (each Color) (1, 1.3, 2 or 4x)	3 bit integ. capacitor 2 bit CDS gain (1, 1.3, 2 or 4x)	3 bit integ. capacitor 4 bit CDS gain (1, 2, 4, 8 or 32x)
Operational Modes	"Hands-off" default or User configurable	"Hands-off" default or User configurable	"Hands-off" default or User configurable	"Hands-off" default or User configurable	"Hands-off" default or User configurable	Programmable Low Pass Filter Programmable 9 to 14bit ADC
Windowing	Dynamic windowing Window size - position	Dynamic windowing Window size - position	Dynamic windowing Window size - position	N/A	N/A	Adjacent channel averaging mode
Readout Modes	Invert (row) Revert (column) Inverse (row-column) Line repeat mode	Invert (row) Revert (column) Inverse (row-column) Line repeat mode	Invert (row) Revert (column) Inverse (row-column)	Integrate both colors simultaneously separate integration control on each color		
Number of Outputs	Selectable 1, 2 or 4 Refer. output	Selectable 1, 2 or 4 Refer. output	Selectable 1, 2 or 4 Refer. output	2 output	1 or 2 (odd/even) for 512 Refer. output	Parallel output 9 to 14 bits (current mode)
Detector Application	p-on-n	p-on-n or n-on-p	p-on-n	p-on-n	p-on-n or n-on-p	Hole or e- collection, direct or indirect detector interface

* Dependent upon operating temperature and internal bias and amplifier settings.

Specifications

	[illegible]	[illegible]	[illegible]	[illegible]	[illegible] (linear array)	[illegible] (linear array)
	Array Size	320 x 256	320 x 256	320 x 256 x 2	512 x 1	128 x 1
Pixel Pitch	30 µm	30 µm	25 µm	40 µm	25 µm, 50 µm, 100 µm	50 µm
Operating Temperatures	77 K to 310 K	77 K to 310 K	77 K to 310 K	60 K to 75 K Stability <0.1K	77 K to 340 K	293 K to 323 K
Detector Bias Range (I_{det} – 1nA)	-0.10 V to 0.5 V (up to 0.8 V)+	0 to 2.5 V	0 to 0.5 V+	VDETCOM - (5.29 to 3.29V)	-0.25 V to 0.25 V Uniformity ≤ 250 µV	1.5-3.5 V
Detector Bias Resolution	5 mV	External adjust	5 mV	63mV steps or external adjust	External adjust	External adjust
RdAd Min.	≥ 1 x 10^{9} Ω·cm²	≥ 10 x 10^{9} Ω·cm²	≥ 1 x 10^{9} Ω·cm²	≥ 1.6 x 10^{9} Ω·cm²	≥ 10^{10} Ω·cm²	N/A
Detector Capacitance Max.	≤ 0.5 pF	≤ 0.1 pF	≤ 0.5 pF	≤ 0.5 pF	< 10 pF	≤ 50 pF
Well Capacity (Min-Max Gain)	18 x 10^{6} e⁻	3.5 x 10^{6} e⁻	18.5 x 10^{6} e⁻	MWIR: > 17 x 10^{6} e⁻ LWIR: > 87 x 10^{6} e⁻	256 x 10^{6} e⁻ to	75 x 10^{6} e⁻
	13.5 x 10^{6} e⁻	170 x 10^{6} e⁻	13.9 x 10^{6} e⁻	MWIR: > 12.8 x 10^{6} e⁻ LWIR: > 65.4 x 10^{6} e⁻	2 x 10^{6} e⁻	0.9 x 10^{6} e⁻
	9 x 10^{6} e⁻		9.3 x 10^{6} e⁻	MWIR: > 8.5 x 10^{6} e⁻ LWIR: > 43.5 x 10^{6} e⁻	(in 8 increments)	(in 8 increments)
	4.5 x 10^{6} e⁻		3.3 x 10^{6} e⁻	MWIR: > 4.3 x 10^{6} e⁻ LWIR: > 21.8 x 10^{6} e⁻		
Input Current (Nominal Operating Range)*	1 pA 1 nA 10 nA	.01 pA 1 pA 50 nA	1 pA 1 nA 50 nA	14pA MWIR: 57pA LWIR: 385pA 1.0nA	Depends on T_{int}	Depends on T_{int}
ROIC Noise (Min. Gain)	≤ 900 e_{rms}*	≤ 700 e_{rms}*	≤ 850 e_{rms}*	MWIR < 1800 e⁻ * LWIR < 4000 e⁻ *	≤ 3700 e_{rms}	≤ 17000 e_{rms}* (low speed)*
ROIC Noise (Max. Gain)	≤ 600 e_{rms}*	≤ 70 e_{rms}*	≤ 670 e_{rms}*	MWIR < 600 e⁻ * LWIR < 1600 e⁻ *	≤ 100 e_{rms} (high speed)**	≤ 8000 e_{rms}**
Output Range	3 V	2.7 V	2.5 V	< 2.0V	2.5 V	0.5 mA ±10%/ bit
Output Interface (Text, Cont)	> 100 kΩ ≤ 25 pF	> 500 kΩ ≤ 25 pF	> 100 kΩ ≤ 25 pF	> 100 kΩ ≤ 25 pF	> 100 kΩ ≤ 25 pF	N/A ≤ 50 pF
Pixel rate	10 MHz	10 MHz	10 MHz	6.25MHz	3.95 MHz (at 77 K) 2.7 MHz (at 300 K)	12.5 MHz
Full Frame Rate (1 output)	110 Hz	110 Hz	60 Hz	N/A	7.1 kHz (at 77 K) 5 kHz (at 300 K)	0.0 Hz for 14 bit up to 35 Hz for 9 bit
Full Frame Rate (2 outputs)	200 Hz	200 Hz	150 Hz	30Hz	14 kHz (at 77 K) 9.8 kHz (at 300 K)	N/A
Full Frame Rate (4 outputs)	346 Hz	346 Hz	260 Hz	N/A	N/A	N/A
Power (1 output)	≤ 30 mW	≤ 100 mW	≤ 75 mW	≤ 100mW, 2 outputs	≤ 55 mW (256)***	≤256 mW
Power (4 outputs)	≤ 120 mW	≤ 175 mW	≤ 180 mW	N/A	≤ 110 mW (512)***	≤2 mW per Channel
*Dependent upon T_{int} and operating conditions	*T_{int} – 1 msec T – 80 K + QWIP Bias option available	*T_{int} – 16 msec, T – 250 K C_{det} + C_{int} – 0.128 pF RdAd ≥ 5 x 10^{9}Ω·cm²	*theoretical, no detector or system noise + QWIP Bias with option available	Based on f/2, 295K, optics – 50% C_{det} – 0.05pF RdAd ≥ 1.6x10^{9}Ω·cm²	*T_{int} – 10 msec, T – 300 K, C_{det} – 0.5pF **T_{int} – 0.2 msec, T – 80 K, no CDS, ITR, C_{det} – 0.5pF *** T = 300 K (x1.4 @ 77 K)	*C_{det} – 4pF, x1 CDS, 14 bit ADC, C_{det} – 50pF **C_{det} – 0.5pF, x32 CDS, 9 bit ADC, C_{det} – 50pF

FLIR

Appendix B. Wassenaar Proposal for the Control of ROICS for IR FPAs

21 January 2013

Matthew Borman
Bureau of Industry and Security
U.S. Department of Commerce
Washington, DC 20230

RE: Wassenaar Proposal WA-EG (13) US XXX – 6.A.2.f Control of ROICs for Infrared Focal Plane Arrays

Dear Matt:

The Sensors and Instrumentation Technical Advisory Committee (SITAC) has concerns regarding the draft Wassenaar Arrangement (WA) proposal related to controls of readout integrated circuits (ROIC) for infrared focal plane arrays (IRFPA). SITAC does not see any merit in submitting a proposal to Wassenaar to control technology that is widely available both within and outside of the Wassenaar regime. The only possible result would be to put US companies and companies located in Wassenaar member countries at a competitive disadvantage to ROIC designers and manufacturers located in non-Wassenaar countries.

WA Participating States seek, through their national policies, to ensure that transfers of products do not contribute to the development or enhancement of military capabilities. The WA objective will not be improved/protected by placing controls on technology and products that have been widely available worldwide for decades.

The details for the design and manufacturing of ROICs for IRFPAs are widely available in the public domain. There are hundreds of patents issued and annual papers published and presented at international technical symposiums. ROIC design techniques are taught in universities and at conferences. Entities located outside of Wassenaar member states, such as China, Taiwan, and Israel design and manufacture ROICs for infrared focal plane arrays. The ROIC devices are manufactured at silicon foundries world-wide. Existence of this technical capability outside of Wassenaar is evident by the significant number of patents and published papers available on this technology.

ROIC Background

Despite the proposal's implication to the contrary, most ROICs are simple integrated circuit devices – typically less than 25 transistors, repeated thousands of times across the ROIC, one time for each pixel. ROICS can be designed by CMOS integrated circuit (IC) designers graduated every year by most high quality electrical engineering universities in the world. As documented below, the key features of various ROIC designs are published in patents and papers that can be reproduced by a designer skilled in the art of IC design. In addition ROICs can be, and in some instances, are fabricated in nearly all CMOS foundries found throughout the world, e.g., TowerJazz, with Fabs in Israel and Japan, TSMC with Fabs in Taiwan, China and Singapore and SMIC with Fabs in China. The simulation and layout computer tools necessary for ROIC fabrication are also available worldwide as are the same tools used to design many complex integrated circuits such as microprocessors and Flash A/D. The "design rules" for laying out the

needed electronic components or the layouts for the components themselves are available in the libraries of these foundries.

Patents

A recent search of the United States Patent Technology Office database produced over five hundred (500) patents issued worldwide directly related to ROICs for IRFPAs and are listed in Enclosure 1. Additionally, of the five hundred patents there are over fifty (50) patents issued to entities in China, listed in Enclosure 2. The patent searches performed for these reports were not exhaustive and it is highly likely that many more patents related to this technology would be found after a more thorough search.

Published Papers

Papers have been published for decades on the details of the design and testing of ROICs. Following are a few examples of papers that have been published by entities outside of Wassenaar on this topic.

1) The Institution of Electronics and Telecommunications Engineers (IETE) Journal of Research has published many relevant papers including: "320x256 Readout Integrated Circuit for Infrared Focal Plane Arrays with Low-Temperature MOSFET Model". Authored by a team from the National ASIC System Engineering Research Center, Southeast University, Nanjing, Jiangsu, China.

2) SPIE – "Optimization of Readout Circuit with Background Suppression for Dual-Band Quantum Well Infrared Focal Plane Array Photodetector." Authored by a team from the National Chi Nan University in Taiwan.

3) SPIE Photonics Asia – "Design low-noise readout circuit for near-infrared InGaAs focal plane array", Paper 8562-4 Author(s): Zhangcheng Huang, Huang Songlei, Jiaxiong Fang, Shanghai Institute of Technical Physics (China)

The papers referenced above are authored by non-Wassenaar country entities and is a small fraction of papers that have been published on this technology.

Conferences / Symposiums

The International Society of Optical Engineering (SPIE) hosts symposiums where papers on details related to ROICs, focal plane arrays, lasers, and many other electro-optical devices are presented. Additionally, SPIE offers classes, related to ROIC design at conferences, such as the Defense, Security and Sensing Symposium in April 2013. The following examples represent just a small sampling of the over one hundred courses offered either on-line or during this coming session as well as courses that have been offered for almost twenty years.

1) Analog-to-Digital Converters for Digital ROICs (SC1076). This course surveys structure and operation of analog-to-digital converters (ADCs) implemented on digital readout integrated circuits (ROICs) and digital image sensors.

2) SPIE-98-04-01-RFC, SPIE 95-0401-RFC, and SPIE 94-0401-RFC are notes from a week-long ROIC and FPA design course taught annually going back to 1994.

These presentations and courses presented at SPIE are typically approved by the US DOD, and are attended by international and domestic audiences.

University Degrees

Many US and non-US universities have practical courses in IC design. Some of the best universities in this area of study are MIT, Stanford, UC Berkeley, Cal Tech, and the University of Utah. It is common for non-US citizens, including Chinese nationals, that have been educated and received advanced degrees from one of the universities listed above, to apply for and in some cases be hired for IC design positions to US companies that design ROICs.

Consequences

In addition to the basic issue that the technology is widely available, the language in the proposal has many inaccuracies and is not clear. There are consumer level products such as CCD video cameras, automotive sensors, and gaming sensors (X-Box) that will be burdened with new export controls. Currently, the automotive and gaming industries use NIR monolithic FPAs with non-eye-safe lasers. Measuring ranges is required for these industries and the need for longer ranges and increased pixel counts is growing. Because of FDA safety requirements this need is driving laser wavelengths into the eye-safe SWIR band and consequently these industries will be profoundly impacted by this proposed control on ROICs.

The proposed language casts an overly broad net that will capture not only existing consumer products but also those that are under development or not yet envisioned.

ECR and Wassenaar Objectives

While the export control reform (ECR) is focused on the movement of products between the ITAR and the EAR, it has the following primary objectives which are relevant when considering placing new controls on widely available technology;

1. Increase support and improve interoperability with allies
2. Focusing resources on the most significant technologies (support higher walls around fewer items)
3. Enhance our industrial base (reduce incentives to design out US technology; set clear-cut rules)

Further, the Wassenaar Participating States seek to ensure that transfers of products do not contribute to the development or enhancement of military capabilities. This proposal does not provide sufficient specificity to meet either ECR or Wassenaar objectives as it attempts to place controls on technology in a very broad manner that is widely available world-wide and in many cases incorporated into dual-use and consumer products. Non-US entities will be further dis-incentivized to incorporate US and other Wassenaar member produced components into products due to the complications and associated cost of compliance for overly regulated components.

Summary

Based on the above facts, there is no reason to submit a proposal on the control of ROICs into the Wassenaar process. There is significant data available in the public domain through patents, papers, university courses, conferences and symposiums that demonstrates the design and manufacturing capability exists outside of the WA members, and there is no evidence that control of ROICs will advance the objectives of WA or ECR. Additionally, this broadly drafted proposal will capture many commercial and consumer products and result in loss of business to companies located in the US and WA partner countries. SITAC welcomes the opportunity to discuss this issue further with BIS should there be any questions regarding this letter.

Sincerely,

Steven J. Tribble
SITAC Chairman

SOFRADIR-EC
373 US Hwy 46W Fairfield, NJ 07004 USA
P: 973-882-0211 F: 973-882-0997
www.sofradir-ec.com

Submission Via Email

July 06, 2015

Mr. C. Edward Peartree
Director, Office of Defense Trade Controls Policy
Directorate of Defense Trade Controls
U.S. Department of State

and

Mr. Dennis Krepp
Office of National Security and Technology Transfer Controls
Bureau of Industry and Security
U.S. Department of Commerce

Subject: JOINT Comments on the Proposed Rules Promulgated by the U.S. Departments of State and Commerce regarding the Amendment of Category XII of the International Traffic in Arms Regulations ("ITAR") United States Munitions List ("USML") and the Revision of the Export Administration Regulations ("EAR") to Control Items No Longer Warranting Control in Category XII of the USML per Export Control Reform

Dear Mr. Peartree and Mr. Krepp:

Sofradir EC, Inc., located at 373 US Hwy 46W, Fairfield, NJ 07004, hereby submits **joint comments** on:

- the Department of State Proposed Rule, 80 Fed. Reg. 25821, concerning Amendment of Category XII of the International Traffic in Arms Regulations' ("ITAR") United States Munitions List ("USML") and

- the Department of Commerce's Proposed Rule, 80 Fed Reg. 25798, concerning revision to the Export Administration Regulations ("EAR") to control various items no longer warranting control in Category XII of the USML per Export Control Reform.

Sofradir EC is submitting joint comments because these comments affect both sets of proposed rules in a common way, and Sofradir EC believes that it is a better use of resources to file a single set of comments on the proposed rules, rather than submitting two sets of comments saying the same things. Where comments are directed at language in one of the proposed rules versus the other proposed rule, yet both proposed rules address the same issue, these comments should be read as applying to both proposed rules.

We are concerned at the proposed changes in the regulations as it seems it will have a negative impact on most of the affected businesses. The proposed rewrite would result in:

1. an expansion of the products that are controlled for export under Category XII of the USML,
2. the significant expansion of licensing requirements under the EAR, and
3. "Presumption of denial" of export licenses involving any transfer of technology regarding EAR-controlled camera systems and sensor assemblies controlled under ECCNs 6A002 and 6A003.

The first and most significant impact is the new term that has been presented in the rewrite is **Permanently Encapsulated Sensor Assembly** ("PESA"). : We do not believe that the Department of State's and Commerce's proposal for the creation of a new standard for incorporating ITAR controlled IRPFAs and components in EAR-controlled sensor assemblies and cameras, under ECCNs 6A002 and 6A003 respectively, in "permanently encapsulated sensor assemblies" is a step forward. As we discuss in the next comment, perhaps if the term "permanently encapsulated sensor assembly" was defined better and more information was provided to indicate the level of "permanence" or the "manner of encapsulation of the sensor assembly" expected by the U.S. Government, we would be more supportive.

PESA seems to have been adopted without a clear explanation of what is meant by "permanently encapsulated" to prevent direct access to the IRFPA. For example, does this term apply only at the lowest chip level - the packaging of the raw detector in a vacuum sealed package? Or does it apply all the way through the building of a core/camera system for commercial applications?

It goes on to state disassembly of the sensor assembly and removal of the IRPFA without destruction or damage? Are there certain methods that are presumed acceptable or unacceptable? What is actually meant by removal without damage or destruction?

Will the government provide a better explanation as to what is meant by permanent and at the different levels of the product?

How does one incorporate an ITAR DEWAR, an ITAR detector, an ITAR cold finger, an ITAR cryocooler in a commercial product in such a way that each part is damaged or made inoperable if the foreign party attempts to remove any of the components?

If a system, cooled or uncooled has more than one ITAR component does each component need to be made inoperable, and how damaged do the parts have to be?

What happens to products that we have developed as commercial systems that have fallen under 6A002A and 6A003A with ITAR components embedded therein that are not considered PESA? Do they get transferred from the EAR to ITAR?

The term Permanent Encapsulated Sensor Assembly is filled with ambiguity and needs to be better defined so manufacturers have clear direction on how to proceed. Additional terms used in the two proposed rules need to be better defined. Terms that are unclear are:

- Multispectral IRFPA set forth in proposed USML Category XII(c)(6) at 80 Fed. Reg. 25826. It is not clear what a "multispectral IRFPA" is; does this term refer to IRFPAs that can operate in separate spectrum bands (e.g., IRFPAs that can operate in both MWIR and LWIR bands)?

- Active cold finger set forth in proposed USML Category XII(c)(9)(ii) at 80 Fed. Reg. 25826, what is an “active” cold finger? Is there a “passive” cold finger?

The second impact the rewrite is as it relates to the release of technology. The definition of “Technology” requires significant clarification to enable businesses to effectively plan and execute product plans and overall commerce. A strict reading of the proposed rules as they pertain to the release of lower level technology, controlled under 6E001 and 6E002 would result in a higher level of control for EAR technology than what applies for the ITAR technology permitted to be exported under TAAs. How does this fall in line with ECR, having higher controls for a lower controlled product?

We feel that the Department of State and Department of Commerce should work on presenting one cohesive document that presents clear definitions of new terms and provide specific guidelines and methodology to manufactures to achieve compliance to the regulations.

Regards,

Michelle Intiso
Export Compliance Manager
Sofradir EC Inc.

SUNPOWER®
2005 E. State Street
Suite 104
Athens, Ohio 45701 USA
Telephone: +1 (740) 594-2221
Fax: +1 (740) 593-7531
www.sunpowerinc.com

AMETEK®

SUNPOWER

06 July 2015
Ref: TGM-15-008

VIA E-MAIL: publiccomments@bis.doc.gov

Regulatory Policy Division
Bureau of Industry and Security
U.S. Department of Commerce
Room 2099B
14th Street and Pennsylvania Avenue NW.
Washington, DC 20230

Subject: RIN 0694–AF75 – Proposed Revisions to EAR with respect to Control of Fire Control, Range Finder, Optical, and Guidance and Control Equipment the President Determines No Longer Warrant Control Under the ITAR.

Dear Sir or Madam:

Sunpower® Inc. ("Sunpower"), a subsidiary of AMETEK, Inc., located in Athens, Ohio, submits these comments in response to the U.S. Department of Commerce's proposed changes to the Export Administration Regulations ("EAR") published at 80 Fed. Reg. 25798 (May 5, 2015) (RIN 0694–AF75). We are very concerned that the proposed changes would have the anomalous effect of making our current dual-use cryocooler products subject to more restrictive export controls and thus threaten the viability of our business.

About Sunpower:

Sunpower was incorporated in 1974 and is based in Athens, Ohio. Sunpower operations are housed in a modern 40,000 square foot facility and employs 78 people. Sunpower currently has annual sales of approximately $12.5M.

Since the invention of the "free-piston" Stirling engine ("FPSE") in the early 1960's by our founder, William Beale, Sunpower's research and development has been applied to the following Sunpower core technologies:

- Stirling engines that produce power from any heat source
- Stirling cryocoolers that use power to move heat

CryoTel® cryocoolers, Sunpower's Stirling cryocoolers, are the result of over thirty years of technical leadership, innovation and evolution in free-piston Stirling technology. The CryoTel® family of cryocoolers is increasingly used in the medical, instrumentation, security, as-

tronomy, telecommunications, and pharmaceuticals markets. Sunpower's cryocoolers integrate with and support technologies such as high temperature superconductivity, radiation detection, optics, CCD, LNA, gas liquefaction.

As we discuss in more detail below, our main competitors are located in Germany, China, the Netherlands, Israel and Japan.

Proposed Revisions to the EAR Affecting Sunpower Products:

Sunpower's dual-use CryoTel® cryocoolers are currently classified under ECCN 6A002.d.2 covering:

d.2. Non-"space-qualified" cryocoolers having a cooling source temperature below 218K (-55° C), as follows:

d.2.a. Closed cycle type with a specified Mean-Time-To-Failure (MTTF) or Mean-Time-Between-Failures (MTBF), exceeding 2,500 hours;

d.2.b. Joule-Thomson (JT) self-regulating minicoolers having bore (outside) diameters of less than 8 mm;

d.3. Optical sensing fibers specially fabricated either compositionally or structurally, or modified by coating, to be acoustically, thermally, inertially, electromagnetically or nuclear radiation sensitive.

Note: 6A002.d.3 does not apply to encapsulated optical sensing fibers "specially designed" for bore hole sensing applications.

Although the proposed revisions would not modify ECCN 6A002.d.2 itself, they would subject Sunpower's dual-use cryocooler products to more restrictive controls by establishing a new RS control that would require a license to export or reexport these ECCN 6A002.d.2 commodities, as well as related software and technology, to all destinations, including Canada. This worldwide RS control would be described further in proposed EAR § 742.6(a)(8). The proposed revisions would also eliminate the availability of License Exception STA for all exports, reexports, and transfers (in country) of ECCN 6A002.d.2 commodities and related software and technology.

These additional controls are not warranted for Sunpower's cryocooler products because our cryocoolers are not used in military applications. Our coolers are too heavy, large in size, and have too much heat removal capacity for military applications such as soldier carry IR, Airborne IR or Missiles. The cryocoolers used for such applications are smaller than 1 kg in mass, and typically have a thermal lift of less than 1/5 W @ 77K.

Adding Regional Stability control to ECCN 6A002 will require a license to export Sunpower's cryocooler to an additional 29 countries for which a license is not currently required. These more restrictive controls will result in additional administrative burden, potential sales

transaction delays and a potential loss of sales to customers who may choose to purchase from foreign sources to avoid this new export license burden. The additional export controls are not warranted for Sunpower's cryocoolers because they are used in commercial applications such as medical instrumentation, pharmaceutical preparation, telecommunications non-military related research, astronomy telescopes, industrial equipment, scientific instruments, and other commercial products. Sunpower's cryocoolers are not suitable for military applications due to their size and weight.

A chart of foreign available cryocoolers is shown in Appendix A. Data sheets for these cryocoolers are publically available. The overwhelming availability of cryocoolers from non-ITAR controlled sources will place constraints on US manufactured cryocoolers which will favor foreign manufactured products. A common question asked by our customers, both foreign and domestic, is "is this cryocooler ITAR controlled?" A customer will pay more and will tolerate less performance and reliability for cryocoolers not subject to ITAR restrictions. The proposed revisions to the EAR places Sunpower in a precarious position of losing our cryocooler manufacturing capability.

Proposed Alternative Language:

Sunpower proposes that cryocoolers specially designed for military applications that are not described in the USML be capture in a new" 600 series" classification. This classification would capture and hold cryocoolers specially designed for military equipment described in other "600 series" ECCN's.

If you wish to discuss Sunpower's comments, please do not hesitate to contact me via telephone at (740) 566-1085 or via e-mail at tom.matros@ametek.com. Sunpower also authorizes Mr. Gary Stanley of Global Legal Services, P.C., in Washington, DC, to discuss our comments with relevant U.S. Government officials. You can reach Mr. Stanley by telephone at (202) 352-3059 and by e-mail at gstanley@glstrade.com.

Thank you very much for your consideration of our input on this very important matter to our company.

Respectfully Submitted,

Tom Matros
Contracts and Export Compliance

APPENDIX A
FOREIGN AVAILABILITY

Manufactur-er	Country of Origin	Cooler	MTTF	Tempera-ture	Weight	cooling power @77K
AIM	Germany	SF070	> 25,000 hr	60 K	850gr	500mW
AIM	Germany	SX095	>15,000 hr	60 K	760gr	600mW
AIM	Germany	7062	> 4,000 hr	59 K	450 gr	500mW
AIM	Germany	SF100A	> 25,000 hr	60 K	1.8kg	1800mW
AIM	Germany	SL150B	>8000 hr	28 K	2.3kg	1000mW
AIM	Germany	SL400A	>8000 hr	28 K	3.1kg	3700mW
AISIN SEIKI	Japan	SPR-05	>3000 hr	< 218 K	18kg	8000mW
Hymatic	United King-dom	SAX101	> 45,000	<70 K	3kg	2700mW
Le Tehnika	Slovenia	SRI401	> 10,000 hr	< 70 K	470 gr	230mW
Le Tehnika	Slovenia	SRL301	> 5000 hr	< 70 K	650gr	400mW
Lihan	China	TC4148	> 50,000	< 40 K	4.3kg	9500mW
Lihan	China	TC4177	> 50,001	< 40 K	4.3kg	9500mW
Ricor	Israel	K562S	> 10,000 hr	< 95 K	185 gr	300mW
Ricor	Israel	K570	> 30,000 hr	< 70 K	930gr	1000mW
Ricor	Israel	K543	> 15,000 hr	< 70 K	470gr	1000mW
Ricor	Israel	K527	> 30,000 hr	< 95 K	345 gr	500mW
Ricor	Israel	K563	> 8,000 hr	< 70 K	290 gr	280mW
Ricor	Israel	K529N	> 25,000 hr	< 70 K	290 gr	250mW
Ricor	Israel	K535	> 30,000	< 70 K	9.5kg	7000mW
Thales	Netherlands	RM1	> 5000 hr	<110 K	250 gr	400m W @110K
Thales	Netherlands	RM2	> 10,000 hr	<77 K	275 gr	400m W
Thales	Netherlands	RM3	no data	no data	450 gr	550m W
Thales	Netherlands	UP8497	> 30,000	< 70 K	650 gr	650 mW
Thales	Netherlands	UP 7086	> 30,000	< 70 K	1300gr	600 mW
Thales	Netherlands	UP 7088	> 30,000	< 70 K	1.9 kg	1900mW
Thales	Netherlands	UP 7098	> 30,000	< 70 K	1.7 kg	2000mW
Thales	Netherlands	LSF 9508	> 45,000	< 70 K	1.7 kg	1050mW
Thales	Netherlands	LSF 9599	> 45,000	< 70 K	1.7 kg	2300mW
Thales	Netherlands	LPT9310	> 90,000	< 70 K	7kg	5100mW
Thales	Netherlands	LSF9510	> 90,000	< 70 K	2.1 kg	9000mW
Thales	Netherlands	LPT9710	> 90,000	< 70 K	16kg	1500mw
Twinbird	Japan	SC-UF01	> 40,000	< 70 K	9.9kg	8000mW

July 5, 2015

U.S. Department of Commerce
Office of National Security and Technology Transfer Controls
Bureau of Industry and Security
Room 2099B, 14th Street and Pennsylvania Avenue NW.
Washington, DC 20230

SUBJECT: **RIN 0694–AF75 Revisions to Export Administration Regulations: Control of Fire Control, Range Finder, Optical, and Guidance and Control Equipment the President Determines No Longer Warrant Control Under the USML**

Dear Sirs:

Systron Donner Inertial thanks the Department of Commerce for the opportunity to submit comments for the above proposed rule. We support the Department's objective of establishing a positive EAR export control List. In response, we provide the following recommendations:

ECCN 7A611:
The "specified to function at linear acceleration levels" value of 10 g for gyros in 7A611.d.3 is too low. Capability to function beyond 10g is driven by design requirements for fairly low level vibration environments:

> (1) gyros have to function correctly at the peak values of the random vibration levels in their applications to ensure correct and usable output data. A gyro designed for a relatively low 3-4 g rms random vibration environment would be designed to function at acceleration levels of the three sigma value of 10 g.
>
> (2) gyros are designed to meet handling shock levels much higher than 10 g for use in most practical applications and as a result may have capability to function at 10 g of linear acceleration.

Relatively benign application requirements drive gyro designs to be capable of linear acceleration levels greater 10 g regardless of the gyro bias and noise performance. Gyros with a wide range of bias and noise performance will be controlled by the 7A611.d.3 control at 10 g and will not create a bright line.

The relatively low "function at linear acceleration levels exceeding 10 g" performance parameter in 7A611.d.3 is also not in alignment with the high performance gyro angle random walk and bias gyro performance thresholds in 7A611.d.1 and 7A611.d.2.

Systron Donner Inertial
2700 Systron Drive, Concord, CA 94518 USA
Ph. 925-979-4500 – Fax 925-349-1366
www.systron.com – sales@systron.com

The existing ECCN 7A002.b gyro performance parameter of "function at linear acceleration levels exceeding 100g" controls gyros with the ability to function at high linear acceleration levels regardless of performance.

We appreciate the opportunity to comment on the proposed rule.

Sincerely,

Dean Johnson
General Manager
Systron Donner Inertial
djohnson@systron.com

PUBLIC SUBMISSION

As of: 7/7/15 12:53 PM
Received: July 06, 2015
Status: Pending_Post
Tracking No. 1jz-8jtg-ugw7
Comments Due: July 06, 2015
Submission Type: Web

Docket: BIS-2015-0016
Revisions to the Export Administration Regulations (EAR): Control of Fire Control, Range Finder, Optical, and Guidance and Control Equipment the President Determines No Longer Warrant Control Under the United States Munitions List (USML)

Comment On: BIS-2015-0016-0001
Export Administration Regulations: Control of Fire Control, Range Finder, Optical, and Guidance and Control Equipment that No Longer Warrant Control under the U.S. Munitions List

Document: BIS-2015-0016-DRAFT-0012
Comment on FR Doc # 2015-10353

Submitter Information

Name: Corey Stewart
Organization: Toyota Motor Engineering & Manufacturing North America, Inc.

General Comment

Toyota Motor Engineering & Manufacturing North America, Inc. (TEMA), an U.S. affiliate of Toyota Motor Corporation of Japan, hereby submits its comments with regard to the proposed rule regarding the control of Fire Control, Range Finder, Optical, and Guidance and Control Equipment. As detailed in the attached comments submitted by TEMA to the U.S. Department of State concerning revisions to Category XII of the USML, TEMA believes the proposed rule should be revised to (i) remove the range limitation on automotive LIDAR systems exempted from ITAR control; and (ii) reduce the scope of ITAR jurisdiction over Infrared Focal Plane Arrays (IRFPAs) and other critical components of LIDAR systems designed for civil automotive safety applications.

First, the range limitation on automotive LIDAR systems exempted from ITAR control should be removed. For automotive safety purposes, enhancing the range of the LIDAR means providing the driver with greater potential response time. TEMA understands that LIDAR systems for automotive application with ranges in excess of 200 meters are already under development. TEMA respectfully suggests that LIDAR systems designed for automotive safety application be exempted from ITAR jurisdiction. In the alternative, TEMA requests that the range limitation be extended to 400 meters from the currently proposed 200 meters.

Second, parts and components designed for automotive LIDAR systems should also be excluded from ITAR control. Although certain LIDAR systems for civil automotive applications would appear to be exempted from ITAR jurisdiction under the proposed rule, several critical components of LIDAR systems would remain under ITAR control. Because an item containing

an ITAR-controlled component is thereby subject to ITAR control itself, this exemption would be limited to only those systems that contain no component listed in Category XII. Because Category XII would control many components that are critical in an effective automotive LIDAR system (especially the IRFPAs discussed below), it would be difficultif not impossibleto construct a LIDAR system effective for automotive safety application that contains no ITAR-controlled component.

Under the proposed rule, ITAR jurisdiction would continue to be exerted over IRFPAs, which are critical components of automotive LIDAR systems. For civil collision avoidance, a LIDAR system must be able to detect and track distant objects in real time. To do so, a LIDAR needs high spatial resolution and wide coverage in a short time period (fast update rate) while the vehicle is in motion. An IRFPA is uniquely capable of achieving this performance by using time-of-flight (TOF) to instantaneously create a 3D depth map.

The proposed rule would exert ITAR jurisdiction over IRFPAs with a wavelength between 900 nm and 30,000 nm. This limitation would preclude the use of IRFPAs for automotive application since, as noted below, all wavelengths potentially useful for automotive application fall within that range:

1400-1600 nm Detection of automobiles and other objects

30005000 nm Penetration of mist, dust, smoke and other small particles

1000015000 nm Detection of persons and live animals

Wavelengths below 1400 nm are not eye-safe and those above 15,000 nm are insufficiently intense for any automotive safety application.

Additionally, IRFPAs designed for automotive LIDAR systems should be excluded from ITAR control since such systems are already available internationally, including the following: (i) Chunghwa Leading Photonics Tech. (Taiwan) InGaAs FPA 320 x 256 (Exhibit 1); and (ii) Xenics (Belgium) InGaAs XFPA-1.7-640-LN2 (Exhibit 2).

Accordingly, TEMA respectfully suggests excluding from ITAR jurisdiction IRFPAs used in automotive systems.

Finally, TEMA requests revising the resolution limitation on IRFPAs. Under the proposed rule, certain photon detector IRFPAs with a resolution exceeding 111,000 detector elements would fall under ITAR control. This standard is already outdated, as the standard video graphics array (VGA) is currently 307,200 pixels. TEMA does not yet know the optimal resolution of an IRFPA in a production automotive LIDAR system, but to avoid hindering automotive safety research, we believe the restriction should be set no lower than 327,680 (640 x 512) detector elements.

Attachments

Toyota Comments to USML Category XII (RIN 1400-AD32)

Exhibit 1 - Chunghwa DM-FPA 320x256-C (Taiwan)

Exhibit 2 - Xenics XSW-640 (Belgium)

TOYOTA

Toyota Motor Engineering &
Manufacturing North America
25 Atlantic Avenue
Erlanger, KY 41018-3151

C. Edward Peartree
Director
Office of Defense Trade Controls Policy
U.S. Department of State
Directorate of Defense Trade Controls
2401 E Street, NW, SA-1, Room H1200
Washington, DC 20522-0112

RIN: 1400-AD32
Re: Public Submission Concerning Category XII of USML (22 CFR Part 121)

Dear Mr. Peartree,

In reference to RIN 1400-AD32, Toyota Motor Engineering & Manufacturing North America, Inc. ("TEMA"), an U.S. affiliate of Toyota Motor Corporation of Japan, hereby submits its comments with regard to the proposed rule regarding Category XII of the United States Munitions List ("USML") (22 CFR Part 121). The proposed rule should be revised and clarified—particularly provisions at paragraphs (c)(2) and the Note to paragraph (b)(6) of Category XII.

Toyota engages in automotive safety research and is interested and invested in LIDAR and infrared focal plane array ("IRFPA") technologies for reducing traffic accidents and fatalities. We feel that the proposed rule may not accurately address the needs of private commercial development and, in turn, may hinder important automotive safety research.

1. Note at (b)(6) Needs Clarification and Revision
   The Note at paragraph (b)(6) of the proposed rule excludes from ITAR control certain LIDAR systems for civil automotive applications. While this exclusion is vital to assuring continued automotive safety innovation using LIDAR systems, several other paragraphs of the proposed rule appear to severely limit the usefulness of this exclusion by placing many of the critical components of LIDAR systems under ITAR control, including the following:

Inconsistent Paragraph	LIDAR Component to be Controlled
Cat. XII (b)(8)(iii)	Certain Geiger-mode detector arrays
Cat. XII (c)(2)	Certain photon detector, microbolometer detector, and multispectral detector infrared focal plane arrays
Cat. XII (c)(3)	Certain one-dimensional photon detector IRFPAs
Cat. XII (c)(4)	Certain two-dimensional photon detector IRFPAs
Cat. XII (c)(6)	Certain multispectral IRFPAs

Cat. XII (c)(12)	Certain infrared imaging camera cores
Cat. XII (e)(4)	Certain readout integrated circuits ("ROICs")
Cat. XII (e)(5)	Certain ROICs

a. **The Exclusion at the Note to (b)(6) is Inadequate**
Because an item containing an ITAR-controlled component is thereby subject to ITAR control itself, the exclusion contained at the Note to (b)(6)—while purporting to exclude LIDAR systems for automotive application—would be limited to only those systems that do not contain any of the components listed in Category XII. Because the list of LIDAR components controlled under Category XII is extensive, it would be difficult—if not impossible—to construct an effective LIDAR system for automotive safety application that contains no ITAR-controlled component. As a result, the exclusion at the Note to (b)(6) is of limited use.

b. **200 Meter Range Limitation is Unnecessarily Restrictive**
The exclusion at the note to paragraph (b)(6) is, in addition, unnecessarily restrictive with regard to the range of the LIDAR systems for civil automotive applications. For automotive safety purposes, enhancing the range of the LIDAR means providing the driver with greater potential response time. TEMA understands that LIDAR systems for automotive application with ranges in excess of 200 meters are already under development. We would therefore suggest revising this restriction to 400 meters.

c. **Alternative Language: Note to (b)(6)**
In order of preference, TEMA respectfully suggests either of the following alternatives to the Note to paragraph (b)(6):

Alternative 1: Exclude from ITAR control LIDAR components designed for civil automotive LIDAR systems:

"Note to paragraph (b)(6): ~~This paragraph~~ <u>Category XII</u> does not control LIDAR Systems, <u>components or parts of such Systems</u>, or equipment for civil automotive applications."

Alternative 2: Exclude from ITAR control LIDAR components designed for civil automotive LIDAR systems having a range limited to 400 meters or less.

"Note to paragraph (b)(6): ~~This paragraph~~ <u>Category XII</u> does not control LIDAR Systems, <u>components or parts of such Systems</u>, or equipment for civil automotive applications having a range limited to ~~200~~ 400 m or less."

2. <u>Paragraph (c)(2) Overly Broad</u>
Paragraph (c)(2) is, in particular, overly broad and would hinder automotive safety research using LIDAR systems. This paragraph—which controls multispectral IRFPAs having a wavelength between 1,500 nm and 30,000 nm—would effectively preclude the incorporation of any IRFPA into an automotive LIDAR system.

a. **IRFPA Critical Component of Automotive LIDAR System**

To be effective for civil collision avoidance, a LIDAR system must have the capability to detect and track distant objects in real time. To do so, a LIDAR needs high spatial resolution and wide coverage in a short time period (fast update rate) while the vehicle is in motion. An IRFPA is uniquely capable of achieving this performance by using time-of-flight ("TOF") to instantaneously create a 3D depth map.

b. Wavelength Limitation Precludes Automotive Safety Application

Paragraph (c)(6) would control IRFPAs with a wavelength between 900 nm and 30,000 nm. This limitation would effectively preclude the use of IRFPAs for automotive application since, as the table below demonstrates, all wavelengths potentially useful for automotive application fall within that range:

Approximate Wavelength Range (in *nm*)	Automotive Application
1,400 – 1,600	Detection of automobiles and other objects
3,000 – 5,000	Penetration of mist, dust, smoke and other small particles
10,000 – 15,000	Detection of persons and live animals

Other wavelength ranges that would not be controlled under the proposed rule would be of no use for automotive safety application. Wavelengths below 1400 nm are not eye-safe and those above 15,000 nm are insufficiently intense for any automotive safety application.

c. Wide Foreign Availability

The international market for IRFPAs has grown immensely over the past several years. IRFPAs that would be controlled under (c)(2) are now widely available abroad, including the following:

IRFPA	Wavelength Range (in *nm*)	Manufacturer	Country
InGaAs FPA 320 x 256 (**Exhibit 1**)	900 – 1700	Chunghwa Leading Photonics Tech.	Taiwan
InGaAs XFPA-1.7-640-LN2 (**Exhibit 2**)	850 – 1600	Xenics	Belgium

d. Alternative Language: Paragraph (c)(2)

In order of preference, TEMA respectfully suggests either of the following alternatives with regard to paragraph (c)(2):

Alternative 1: Revise Note 1 to paragraph (c)(2) to include the following:
"IRFPAs used in automotive LIDAR systems are not subject to the ITAR."

Alternative 2: Revise (c)(2) to control only those IRFPAs specially designed for military application, as follows:

"(c)(2) Photon detector, microbolometer detector, or multispectral detector infrared focal plane arrays (IRFPAs) specially designed for military application and having

a peak response within the wavelength range exceeding 900 nm but not exceeding 30,000 nm and not integrated into a permanent encapsulated sensor assembly, and detector elements therefor."

3. Resolution Restriction in Paragraph (c)(12)(viii) is Outdated
Paragraph (c)(12)(viii) would control certain photon detector IRFPAs with a resolution exceeding 111,000 detector elements. This standard is already outdated, as the standard video graphics array ("VGA") is currently 307,200 pixels. TEMA does not yet know the optimal resolution of an IRFPA in a production automotive LIDAR system, but to avoid hindering automotive safety research, we believe the restriction should be set no lower than 327,680 (640 x 512) detector elements.

4. Point of Contact
If you require additional information, please contact Mr. Corey Stewart, who is authorized to interact with the U.S. government on TEMA's behalf, as follows:

Corey A. Stewart, Esq.
STEWART PLLC
1250 Connecticut Avenue, N.W.,
Suite 200
Washington, DC 20036
202.379.2919 Office
202.379.3088 Fax
703.283.2802 Mobile
corey.stewart@stewartpllc.com

* * *

Thank you for the opportunity to comment on the proposed rule. Please let us know if we can be of any assistance as you consider this important matter.

Respectfully Submitted,

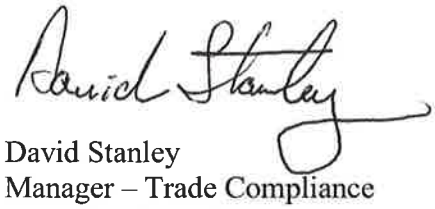

David Stanley
Manager – Trade Compliance
Logistics Control
Parts Business Management

http://www.leadinglight.com.tw/

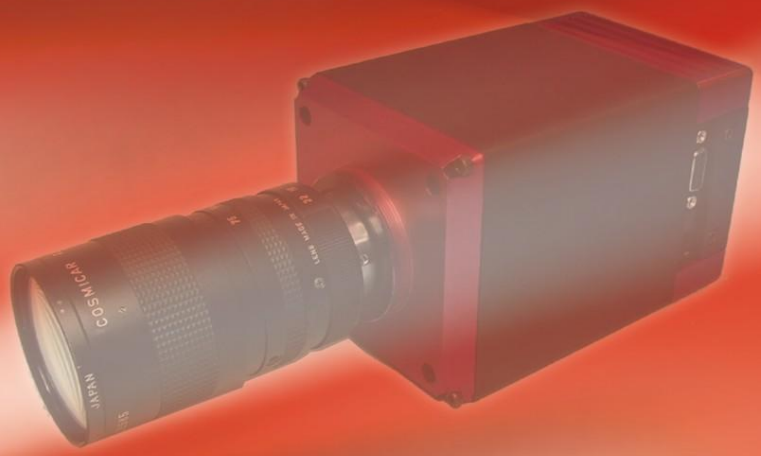

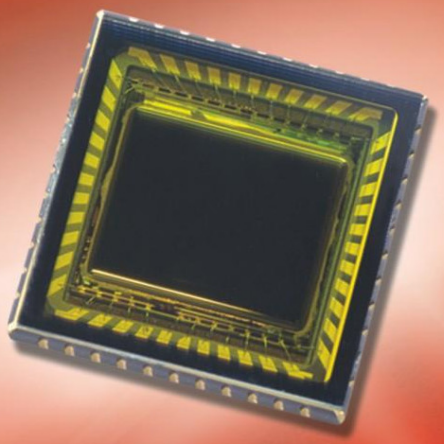

InGaAs FPA 320x256

The InGaAs focal plane array is the optimized solution for near-infrared imaging and imaging spectrography applications in 900nm to 1700nm wavelength range especially under uncooled condition. The core technology of CLPT implements the InGaAs FPA with excellent quality. The CLCC package also facilitates the mechanical design of CCD and CMOS camera vendors.

Features

- 320x256 array format
- 30um pixel pitch
- CLCC package
- Low dark current
- High quantum efficiency
- High operability

Applications

- Near-infrared imaging
- Hyper spectrum
- Covert surveillance
- Semiconductor inspection
- Astronomy and scientific
- Industrial thermal imaging

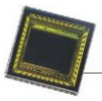

中華電信股份有限公司
Chunghwa Telecom Co., Ltd.

中華立鼎光電
Chunghwa Leading Photonics Tech.

InGaAs FPA 320x256

Specifications of FPA 320x256-C

Absolute Maximum Ratings

Parameter	Unit	Min	Max
Operation Temperature	^{0}C	-20	85
Storage Temperature	^{0}C	-40	85
Power Consumption	mW	---	175

FPA Characteristics

Parameter	Typical	Conditions
Spectral response	0.9um-1.7um	---
Minimum Pixel Operability	>99%	Within 318x254 center region
Dark current	<0.4pA	25°C,0.1V detector bias
Quantum efficiency	>70%	λ =1.0um-1.6um
Detectivity	≧5x10^{11} Jones	25°C, λ =1.55um,T_{int}=16ms,High Gain
Response nonumiformity	<10%	under 50%saturation,25°C
Nonlinearity(max.deviation)	<2%	Over 10%-90% full well capactity
Max.pixel rate	10MHz	---
GAIN	High:14.38uV/e$^-$ Low:0.77uV/e$^-$	25°C

Package Outline

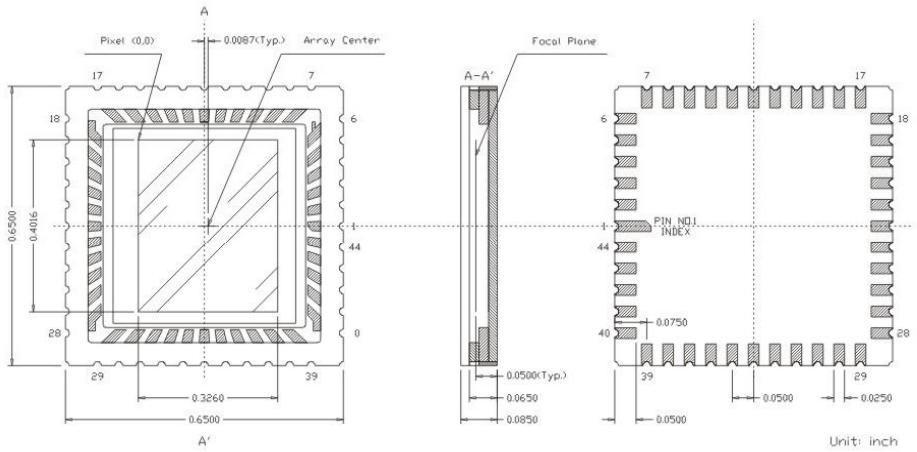

中華立鼎光電
Chunghwa Leading Photonics Tech.

Chunghwa Leading Photonics Tech.
Address: 12, Lane 551, Min-Tsu Road Sec. 5, Yang-Mei, Taoyuan, Taiwan 32617, R.O.C.
Tel: +886-3-4244050/Fax:+886-3-4245849
E-mail: cchong@cht.com.tw
http://www.leadinglight.com.tw/

Xenics
Infrared Solutions

Imagine the invisible

Modules & components

XSW-640

High resolution TE1-stabilized SWIR OEM module

Ready-to-integrate SWIR OEM module consuming ultra-low-power

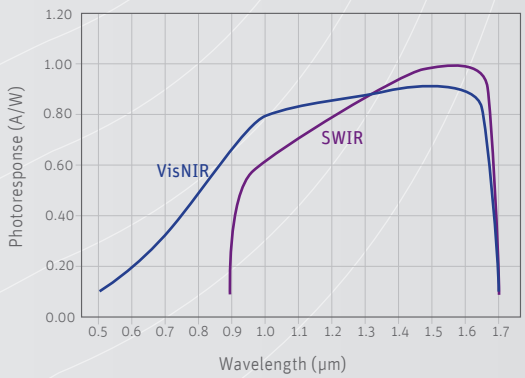

Xenics' XSW-640 OEM module is extremely compact and versatile for easy and swift integration in your SWIR imaging configuration.

Typical OEM applications include infrared imaging for man–portable and unmanned (airborne and land-based) vehicle payloads, night vision, border security, Search & Rescue (SAR) and more.

The XSW-640 OEM module detects short wave infrared radiation between 0.9 (optionally 0.4) and 1.7 µm with a wide dynamic range and wide operating temperature.

The Thermo Electric (TE) stabilization reduces the dark current and noise levels. Together with on-board image processing you will have best contrast and high image quality.

Designed for use in

Person identification

Camouflage detection

Vision enhancement: looking through haze with SWIR

Key features

- Made in Europe
- High resolution
- Easy connectivity
- Small 20 µm pixel pitch

OEM applications

- SWIR sights
- UAV / UGV
- Border security
- Laser detection
- Night vision (passive & active)
- Search & Rescue
- Driver assistance
- Electro optical payloads
- Long range identification
- Enhanced Vision Systems (EVS)

Ready-to-integrate

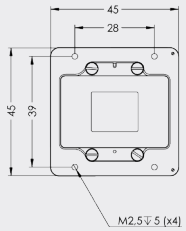

Front of module

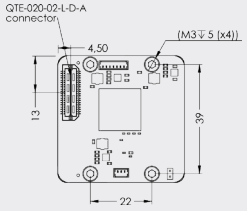

Samtec QTE interface

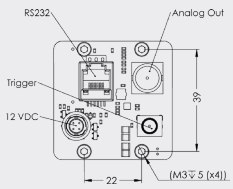

Analog interface

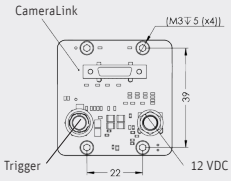

CameraLink interface

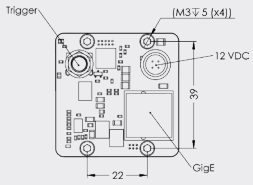

GigE interface

Specifications

Module specifications	XSW-640-Samtec	XSW-640-Analog	XSW-640-CL	XSW-640-GigE
Lens				
Focal length	Broad range of lenses optional available			
Optical interface	Fixation holes for multiple lens mount			
Imaging performance				
Frame rate	Max 100 Hz	25 Hz (PAL) 30 Hz (NTSC)	Max 100 Hz	
Window of Interest	Minimum size 32 x 4			
Exposure time range	1 µs - 40 ms in high gain mode			
Noise*	High gain: 120 e- Low gain: 400 e-			
Gain	High gain mode: 1.28 e-/ADU Low gain mode: 16.2 e-/ADU			
On-board image processing	Image correction (TrueNUC for high gain and low gain), auto gain, auto exposure, histogram equalization, trigger possibilities			Up to 4 NUCs, auto gain, trigger possibilities
ADC	14 bit			
Interfaces				
Digital output	BT.601-6/ BT.656-5	-	CameraLink or Xeneth API/ SDK	GigE Vision or Xeneth API/SDK
Analog output	-	PAL or NTSC	-	-
Module control	Serial LVCMOS 3 V (XSP)	RS232 (XSP)	CameraLink	GigE Vision
Trigger	In or out (configurable)			
Power requirements				
Power consumption* (without TEC)	2.5 W	3 W	2.8 W	4 W
Power supply	+/- 12 V			
Physical characteristics				
Shock	40 G, 11 ms halfsine profile, according to MIL-STD810G			
Vibration	5 G, (20 Hz to 1000 Hz), according to MIL-STD883J			
Operating case temperature	-40 °C to 70 °C (industrial components)			
Storage temperature	-45 °C to 85 °C (industrial components)			
Dimensions (W x H x L mm³)	45 x 45 x 51	45 x 45 x 55	45 x 45 x 55	55 x 55 x 65
Weight module (without lens)	120 g	145 g	129 g	165 g

** Typical values*

Array specifications	XSW-640
Sensor type	InGaAs Focal Plane Array (FPA) ROIC with CTIA** topology
Spectral band	0.9 to 1.7 µm Optional 0.4 to 1.7 µm (VisNIR)
# pixels	640 x 512
Pixel pitch	20 µm
Readout mode	Integrate Then Read (ITR) Integrate While Read (IWR)
Quantum efficiency	80 % @ 1.6 µm (SWIR) 85 % @ 0.9 µm (VisNIR)
ROIC noise*	High gain: 60 e-; low gain: 400 e-
Sensitivity*	High gain: 20 µV/e-; low gain: 1.6 µV/e-
Dark current*	0.8 x 10^6 e-/s
Integration capacitor	High gain: 6.7 fF; low gain: 85 fF
Array cooling	TE1-stabilized
Pixel operability	> 99 %

** Typical values*
*** Capacitor TransImpedance Amplifier*

Product selector guide

Part number	Frame rate	Interface	VisNIR
XEN-000295*	100 Hz	16bitDV	No
XEN-000304**		BT.656	
XEN-000343		CameraLink	
XEN-000341		GigE Vision	
XEN-000347	25 Hz	PAL	
XEN-000348	30 Hz	NTSC	
XEN-000098*	100 Hz	16bitDV	Yes
XEN-000305**		BT.656	
XEN-000344		CameraLink	
XEN-000342		GigE Vision	
XEN-000349	25 Hz	PAL	
XEN-000350	30 HZ	NTSC	

Part number	Interface	Connects with	Optional
ASY-000880*	CameraLink	XEN-000295 XEN-000098	Yes
ASY-000879**	PAL/NTSC	XEN-000304 XEN-000305	

** and **Optional test board interface*

XB-051 issue 05 | Information furnished by Xenics is believed to be reliable. However, no responsibility is assumed for possible inaccuracies or omissions Specifications are subject to change without notice. This information supersedes all previously supplied information.

www.xenics.com
www.sinfrared.com

Xenics Headquarters
Ambachtenlaan 44, BE-3001 Leuven, Belgium
T +32 16 38 99 00 • sales@xenics.com

Xenics
Infrared Solutions
ISO 9001:2008 certified

July 6, 2015

PUBLIC DOCUMENT

Submitted electronically to publiccomments@bis.doc.gov

Regulatory Policy Division
Bureau of Industry and Security
U.S. Department of Commerce
Room 2099B
14th Street and Pennsylvania Avenue, NW
Washington, DC 20230

ATTN: Dennis Krepp, Director, Office of National Security and Technology Transfer Controls, Bureau of Industry and Security

Subject: RIN 0694-AF75; CCL Amendment – Category 6

Dear Mr. Krepp:

Umicore USA, Inc. ("Umicore USA"), its parent N.V. Umicore S.A. of Belgium, and its domestic subsidiary Umicore Optics Materials USA Inc. ("UOM"), collectively "Umicore," respectfully submit these comments in response to the May 5, 2015 notice of proposed rulemaking published by the U.S. Department of Commerce, Bureau of Industry and Security ("BIS") concerning optics equipment. See "Revisions to the Export Administration Regulations (EAR): Control of Fire Control, Range Finder, Optics, and Guidance and Control Equipment the President Determines No Longer Warrant Control Under the United States Munitions List (USML)," 80 Fed. Reg. 25798 (May 5, 2015).[1]

BIS specifically requested comments on whether this proposed rule would inadvertently control items in the 600 series that are in normal commercial use. BIS also asked the public to identify proposed control criteria that do not clearly describe defense articles or establish a "bright line" between the U.S. Munitions List ("USML") and the Commerce Control List ("CCL") or between the 600 series and the rest of the CCL. As a leading global manufacturer in optics materials and products, Umicore is well-positioned to address these questions.

As currently proposed, the new 600 series for Category 6 would be a step in the wrong direction for export control reform with respect to optics products, materials, production equipment and technology. In short, the proposed regulation would implement criteria that are insufficiently tailored to delineate between military and commercial products. Optics blanks and infrared lenses should be entirely subject to Commerce jurisdiction, and such products generally should be EAR99. To the extent that large optics blanks and infrared lenses should be

[1] Umicore separately is providing comments on the U.S. State Department's corresponding proposed rulemaking concerning revisions to USML Category XII, which also impacts optics products.

controlled on the basis of their size, they should be placed under existing dual-use controls in Category 6 that regulate similar materials by size. Only certain optics blanks and infrared lenses that meet specific parameters indicating clear military application should be controlled in the 600 series. There is no reason to default to "specially designed" catch-all controls for optics blanks and infrared lenses (as proposed in the corresponding State Department rulemaking). Further, any regulations controlling optics blanks and infrared lenses expressly need to exclude germanium windows that are not optically worked, as wells as germanium raw materials in any format, all of which should be EAR99.

To capture infrared optics blanks under the highly restrictive 600 series, solely on the basis of size, and to add infrared lenses to the USML, would thwart the underlying purpose of export controls reform, to help: "strengthen our national security by focusing our efforts on controlling the most critical products and technologies and by enhancing the competitiveness of key U.S. manufacturing and technology sectors."[2] Umicore's comments below provide information about the commercial infrared optics industry, explain why the proposed control parameters do not work, and suggest alternative control parameters for consideration.

I. Company Background

Umicore is a multinational materials company headquartered in Belgium, with more than 14,000 employees in 38 countries. The company's main divisions include energy materials (specialized metals and products for industrial use), performance materials (precious metals and zinc), catalysis (automotive catalysts and precious metals chemistry), and recycling of precious metals and other specialized materials. Umicore's products supply a range of industries, including the automotive, vision, electronics, construction, optics and displays, battery and power distribution, and chemical industries, among others.

Umicore USA, located in Raleigh, North Carolina, is the U.S.-based subsidiary of Umicore. Umicore USA holds UOM, located in Quapaw, Oklahoma, which is the leading U.S. manufacturer of germanium products. The Quapaw facility also performs high volume assembly of infrared imaging products made from GASIR, Umicore's proprietary germanium-based chalcogenide glass. UOM's main markets are thermal imaging and opto-electronic applications, for which it supplies germanium wafers and blanks, infrared germanium and chalcogenide lenses and optics, and germanium-based chemicals. End-use applications for Umicore's infrared products include automotive, thermal imaging, security and surveillance, fire-fighting, defense, and many other commercial and dual-use applications.

Through its U.S. subsidiaries, Umicore provides many high tech engineering and manufacturing jobs within the United States. Umicore's U.S. operations compete on a global basis and derive a substantial and growing portion of their revenue from export-based sales. Umicore expects exports from the United States to increase. However, this rulemaking could have a significant impact on the company's incentives to grow its U.S. operations. Umicore's technology is predominantly E.U.-origin, with technology transfers and production capabilities generally provided from the foreign parent to the U.S. operations. If restrictive unilateral controls apply to optics technology and products within U.S. jurisdiction, which do not apply in

---

[2] See White House press release, August 30, 2010, available at: https://www.whitehouse.gov/the-press-office/2010/08/30/president-obama-lays-foundation-a-new-export-control-system-strengthen-n.

the E.U. export control regime, companies like Umicore that also have production facilities in Europe may need to reevaluate their United States growth strategies.

II. Commercial Market for Optics Blanks and Infrared Lenses

When thermal imaging technology first emerged, it primarily was used in experimental science, military, and space applications. However, the past few decades have seen a surge in the development of this technology, along with increasing demand for commercial applications.

Furthermore, the infrared optics industry is now global. The technology and production capabilities required to manufacture high performance infrared optics are not unique to the United States. This technology and production capability already is global, with China, Israel, and Russia producing comparable infrared lenses and competing to supply orders placed by thermal imaging customers in the United States and Europe. In fact, in Umicore's case, the company has transferred technology and production capability from its E.U. operations to the United States.

Like the current version of the CCL, optics blanks and infrared lenses are not explicitly listed on the Wassenaar Dual Use List or the E.U Dual Use List.[3] Overly restrictive unilateral controls will drive the global market away from U.S. producers, as customers easily are able to buy equivalent optics from foreign sources. This will have a devastating effect on the U.S. optics industry, as U.S. production loses its competitive advantage, and companies move optics production (and high tech jobs) overseas.[4] Therefore, it is imperative that U.S. producers be permitted to export their infrared optics products on the same terms that apply to competitors in foreign jurisdictions, in order to remain viable in the competitive global market.

The following summarizes the current state of the global infrared optics markets.

- The cost of infrared detectors (the most significant component in a thermal imaging system) is dramatically decreasing, which puts pressure on the price of other components such as lenses. With a lower price point, high performance infrared optics products are increasingly accessible for common commercial applications. And, as a corollary, U.S. optics producers need access to commercial customers to increase sales volumes and remain competitive at lower price points.

- Infrared technology is rapidly moving towards smaller systems with higher resolution. For example, the commercial market is now demanding a pixel size of 12 μm (for example, consumer smart phones), with video graphics array (VGA) resolution of 640 x

[3] The E.U. Dual Use List follows the Wassenaar Dual Use List, in that they both control infrared optics products in their respective Category 6, without a specific reference to optics blanks or infrared lenses.

[4] As stated by former Secretary of Defense Robert Gates, in launching the export control reform initiative: "Multinational companies can move production offshore, eroding our defense industrial base, undermining our control regimes in the process, and not to mention losing American jobs. Some European satellite manufacturers even market their products as being not subject to U.S. export controls, thus drawing overseas not only potential customers, but some of the best scientists and engineers as well." Statement available online at: http://www.defense.gov/speeches/speech.aspx?speechid=1453.

480 pixels (for example, civilian security/surveillance applications). Industry research predicts that by next year, every key player in the thermal imaging industry will be selling products within the 12 μm pixel range.

- Global competition is increasing, and U.S. optics producers comprise less than half of the total market. Chinese producers are improving the quality of their mass produced germanium-based optics products. China is now producing germanium optics blanks larger than 5 inches wide, as well as infrared lenses with pixels at or below 12 μm, XVGA resolution (1024x768 pixels), and focal lengths exceeding 100 mm. Further, Chinese producers have access to low cost germanium sourced locally, giving them a competitive edge in infrared optics production. Other countries with infrared optics technology and production capabilities at or exceeding the level of the United States include Belgium, Canada, France, Germany, India, Israel, Japan, Korea, Lithuania, Russia, Singapore, Sweden and United Kingdom.

- Well-established commercial markets for infrared optics, which presently use lenses that could be interchangeable for use in military applications, include:
    - Industrial and scientific thermography;
    - Building and construction monitoring and maintenance;
    - Surveillance and security;
    - Automotive safety;
    - Aviation navigation;
    - Maritime navigation;
    - Fire-fighting;
    - Hunting and hobby gun shooting; and
    - Consumer smartphone applications.

- The commercial segment now dominates the uncooled infrared optics industry, with that trend predicted to increase.[5] Umicore estimates that within the next four years, military end uses for uncooled infrared optics will comprise only 25% of the global market, with commercial applications accounting for the remaining 75%. Of the commercial segment, Umicore expects that consumer applications will be the largest share.

- While large infrared optics elements historically have been used predominantly in military applications, military end users increasingly are requiring smaller size optics for vehicle and soldier-mounted devices. Conversely, civilian space research applications require larger lenses for high powered telescopes. Physical size no longer is a bright-line differentiator between military and commercial applications.

For graphic illustrations showing the market shares for commercial versus military applications, please refer to the charts appended to these comments. Additionally, for detailed information on actual foreign availability of optics products that match or exceed the performance of U.S. produced products, please see the list following the appended charts.

---

[5] Note: uncooled infrared technology can be commercial, dual-use, or military, whereas cooled infrared is still predominantly military.

III. Comments on Proposed Rulemaking

Umicore provides the below comments with respect to the proposed rulemaking's impact on optics blanks and infrared lenses. Because Umicore specializes in the production of germanium and chalcogenide,[6] the below comments focus on optics blanks and infrared lenses made of those specific materials. We do not address other materials from which these products could be produced, such as zinc selenide or zinc sulfide (which also are included in the proposed ECCN 6A615.c).

It is important to note that – unlike most items covered under this proposed rulemaking – infrared optics materials are not sensors, nor are they systems or equipment containing sensors. Rather, infrared lenses, made from optics blanks, simply are solid discs made of crystalline materials or glass that have the capacity to transmit infrared radiation while filtering out visible light, and which have been optically worked (meaning shaped with curvature), polished, and coated. The infrared transmission is a physical property of the material from which the lenses are made, which can be adjusted or enhanced through the shaping of the material, as well as the application of special coatings to the surface of the material, during the lens finishing process. There is nothing electronic or sensing about how the lenses work; infrared waves just pass through them.

In other words, optics blanks and infrared lenses, which perform a purely mechanical function, are not the "crown jewels"[7] that are the basis for maintaining the United States' military technology advantage. Rather, these products generally should be EAR99, with explicit criteria set forth on the CCL to control the limited set of products that have unique military application.

A. Optics Blanks Should Be Subject to Commerce Jurisdiction, with Control Parameters that Reflect Military Applications

Until now, optics blanks made from germanium or chalcogenide have not been expressly identified for control on either the USML or the CCL.[8] Nor are these products expressly identified on the Wassenaar Dual Use List or the E.U. Dual Use List. It is not possible to discern the intended end use of any blank by visual inspection, as a blank is by definition an unfinished material. To the extent that these products could be controlled for reasons other than EAR99, it would be because they can in some instances have certain properties or characteristics that make them particularly useful for military application. On that basis, some optics blanks have been

---

[6] A chalcogenide glass is a glass containing one or more chalcogenide elements (not counting oxygen). Typically these glasses include sulfur, selenium or tellurium in combination with germanium, arsenic or antimony.

[7] Sec. Gates also described the purpose of export control as enabling the U.S. government "to concentrate on controlling those critical technologies and items – the "Crown Jewels" if you will – that are the basis for maintaining our military technology advantage, especially technologies and items that no foreign company or government can duplicate." *See id.*

[8] By contrast, the CCL, Category 6, does expressly control zinc selenide or zinc sulfide optics components and materials in ECCNs 6A004 and 6C004. These products are competitors for germanium and chalcogenide with respect to infrared optics blanks and lenses.

captured by USML Category XII(e), which controls parts and components specially designed for use in military fire control, range finder, optics, and guidance control systems.

The Commerce Department now proposes to create a new export control classification number – ECCN 6A615.c – which would capture infrared optics blanks solely on the basis of size. The proposed rule is based on an incorrect presumption that size allows a bright line to be drawn around military applications. Umicore respectfully submits that there are alternative criteria that would enable more effective control of military optics blanks, without unnecessarily restricting optics blanks that are in normal commercial use.

Size is no longer an accurate indicator of military application for optics blanks. While the majority of applications for optics blanks larger than 5 inches in diameter or length tend to be military, there are civilian applications above 5 inches. For example, scientific observatory telescopes and telephoto cameras used in civilian space research routinely use infrared lenses 5 inches wide or larger. In contrast, the military has been following the commercial trend towards smaller optics blanks, to be used in vehicle or soldier-mounted devices.

In any case, controls on optics blanks should on their face categorically exclude the following products, which should be EAR99:

- crystalline germanium in ingots, bars, or discs, which have not yet been processed into optics blanks (such items are traded as raw material commodities); and

- infrared windows comprised of any material, which have not been optically worked and have no curvature or optical power (infrared windows are used simply as a protective layer over an infrared camera in rugged environments, for example to protect against salt water corrosion in maritime applications, and in such cases the windows are entirely separate from the infrared lenses incorporated into the cameras).

1. Size Controls Are Especially Problematic for Germanium Blanks

There is a major problem with respect to controlling germanium blanks on the basis of size. Germanium, unlike zinc selenide, zinc sulfide, and chalcogenide, is a metal commodity. As such, crystalline germanium routinely is formed into large bars, ingots, windows, and discs – the raw material format in which it is bought, sold, and transported around the world without export control. To apply size parameters to germanium blanks, which simply are discs of crystalline germanium material pre-cut for further finishing into a lens, would have the unintended and absurd effect of imposing export controls on germanium as a commodity.

Accordingly, Umicore respectfully urges the U.S. government not to impose any export controls on germanium blanks on the basis of size. An alternate parameter, however, that would enable the U.S. government to effectively control germanium blanks that have unique military application is resistivity. Low resistivity, i.e., below 5 ohm centimeters at 20 degrees Celsius, indicates special design for military application. That property functions as a military counter-counter measure, hardening the infrared lens against electromagnetic interference directed at the internal sensor. In other words, very low resistivity in the lens material enables a device to operate in a stealth mode. It is technologically difficult to produce germanium crystals with

resistivity below 5 ohm, and germanium with that property typically is not required for commercial applications.

As an alternate criteria to size, Umicore submits that resistivity below 5 ohm would be an appropriate threshold for controlling germanium blanks under ECCN 6A615.c. Otherwise, germanium blanks with a resistivity higher than 5 ohm, regardless of size, should be EAR99.

2. Chalcogenide Blanks, if Controlled for Size, Should Not Be in 600-Series

Chalcogenide is a more highly resistive material than germanium and is not inherently effective for use in counter-counter measures, without the application of a low resistivity coating during the lens finishing process. Since blanks are unfinished, uncoated materials, resistivity would not be a relevant measure for determining military special design.

Chalcogenide products generally do not take on special military characteristics until after they have been further processed into finished lenses. For that reason, Umicore urges the Commerce department not to impose any 600 series controls on chalcogenide blanks.

To the extent the U.S. government determines that large chalcogenide blanks should be export controlled at all, there is an existing ECCN 6A004.b,[9] which already controls zinc selenide and zinc sulfide optics blanks for use in the infrared spectrum, according to their size, as dual-use products. This ECCN corresponds to the Wassenaar Arrangement and also the E.U. export control list. Although neither of those lists expressly controls chalcogenide, to bring large chalcogenide blanks under ECCN 6A004.b would more closely align with multilateral regimes, as opposed to the highly restrictive, unilateral controls of the 600 series.

B. Infrared Lenses/Lens Assemblies Should Be Subject to Commerce Jurisdiction, with Clear Parameters for Control

The State Department, in its corresponding rulemaking, is proposing to add a new subparagraph (9) to its existing paragraph (e) for parts and components in USML Category XII ("Fire Control, Range Finder, Optical and Guidance and Control Equipment"). Under the proposed rule, infrared lenses "specially designed" for any article controlled under USML Category XII would be subject to the ITAR. Umicore is submitting separate comments to the State Department to address that proposed rule. One common point Umicore makes in its comments to both agencies is that infrared lenses (and lens assemblies), as mechanical, non-sensing and non-electronic components, should not be controlled on the USML at all.

---

[9] ECCN 6A004 – Optical equipment and "components," as follows:

b. Optical "components" made from zinc selenide (ZnSe) or zinc sulphide (ZnS) with transmission in the wavelength range exceeding 3,000 nm but not exceeding 25,000 nm and having any of the following:

b.1. Exceeding 100 cm^3 in volume; *or*

b.2. Exceeding 80 mm in diameter or length.

of major axis and 20 mm in thickness (depth);

The infrared lens market has reached a place where many customers – including military and commercial – prefer to design their devices around standard catalog parts that increasingly are dual-use. To the extent that certain characteristics and customizations can make an infrared lens predominantly useful in military applications, such lenses should be controlled under the 600 series of the CCL, not the ITAR. Lenses are not sensors, and they are a relatively low-value, mechanical component of a thermal imaging system. Finally, the United States does not have a unique military or intelligence advantage with respect to lens technology or production – the rationale stated in the proposed rulemaking for keeping products on the USML.

Another important point is that, if lenses and assemblies are to be export controlled, they should be regulated according to specific technical parameters. There is no need to resort to the "specially designed" catch-all approach in controlling infrared lenses, given the availability of criteria for distinguishing lenses that are uniquely military in their application.

There are several technical criteria that could be useful in determining which lenses should be export controlled versus those that remain EAR99. As with optics blanks discussed above, Umicore believes that infrared lenses should not be subject to 600 series controls on the basis of their size alone. If Commerce determines that it is necessary to control finished lenses on the basis of size, Umicore proposes that large lenses (those exceeding 5 inches in diameter or length) that have no other special military properties should be regulated under the existing dual-use controls in ECCN 6A004, not the restrictive 600 series.

In connection with removing infrared lenses entirely from ITAR control, the following parameters would be appropriate for the 600 series, to capture the limited set of lenses or lens assemblies that are unique to military applications:

- Lenses with resistivity less than 5 ohm centimeters at 20 degrees Celsius;
- Lenses coated for a military application, including for purposes relating to counter-counter measures against electromagnetic interference and other forms of electronic warfare;
- Lenses specially designed for use in missile applications, with dome shaped contouring;
- Lens assemblies that are space qualified;
- Lens assemblies with a focal length exceeding 100 mm, combined with a resolution exceeding XVGA, which factors together create a high performance long-distance lens; or
- Lens assemblies specially designed to function with cooled thermal imaging systems.

B. Production Equipment, Software, and Technology Relating to Optics Blanks and Infrared Lenses Should Be Excluded from the 600 Series

Because most optics blanks and infrared lenses are made using the same equipment, technical process, and design software – regardless of whether the product itself has special features warranting control or whether it is a basic commercial product – subjecting production equipment, software and technology used to make controlled products would have an unintended and disastrous effect on U.S. producers in the infrared optics industry. If the Commerce

Department determines that certain blanks and/or lenses merit control under the 600 series, the Department should exclude production equipment, software, or technology for these items from the corresponding 600 series ECCNs. Such production equipment, software, or technology already is adequately regulated under Category 6 dual-use controls or as EAR99. Imposing more restrictive controls on production equipment, software, or technology required for the production of optics blanks and infrared lenses could shut down U.S. commercial manufacturing in this industry segment.

IV. Umicore's Proposed Alternate Control Thresholds

	Optics Blanks	**Infrared Lenses/Assemblies**
USML Cat. XII	None	None
ECCN 6A615	• Germanium blanks only, with resistivity below 5 ohm centimeters at 20°C. • No chalcogenide blanks.	• Lenses with resistivity less than 5 ohm centimeters at 20 degrees Celsius; • Lenses coated for a military application, including for purposes relating to counter-counter measures against electromagnetic interference and other forms of electronic warfare; • Lenses specially designed for use in missile applications, with dome shaped contouring; • Lens assemblies that are space qualified; • Lens assemblies with a focal length exceeding 100 mm, combined with a resolution exceeding XVGA, which factors together create a high performance long-distance lens; or • Lens assemblies specially designed to function with cooled thermal imaging systems.
ECCN 6A004	• Chalcogenide blanks exceeding 5 inches in diameter or length. • No size controls for germanium blanks.	• Finished infrared lenses made from any materials that exceed 5 inches in diameter or length.
EAR99	• Default for optics blanks, unless captured under positive controls in ECCNs 6A615 or 6A004. • Crystalline germanium in ingots, bars, or discs, which have not yet been processed into optics blanks. • Infrared windows comprised of	• Default for infrared lenses and assemblies not captured under ECCN 6A615 positive controls.

	any material, which have not been optically worked and have no curvature or optical power.	

Umicore greatly appreciates this opportunity to provide comments on this proposed rulemaking. Should the Commerce Department require any further information, the undersigned may be contacted at: thomas.mckelvey@am.umicore.com or at (919)-874-2127.

Respectfully submitted,

Thomas R. McKelvey
Umicore USA Inc.
Regional Trade Compliance Manager

See Appendix on Following Page for Market Information

APPENDIX

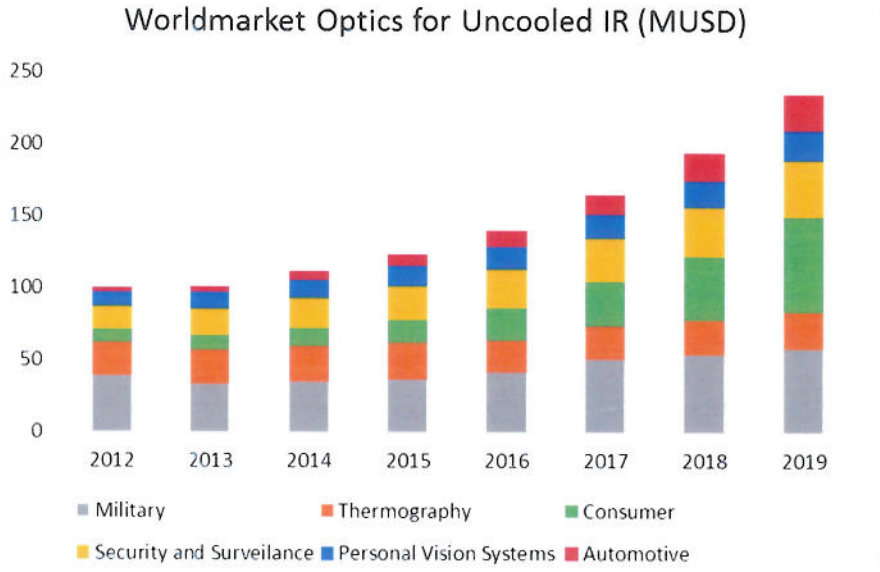

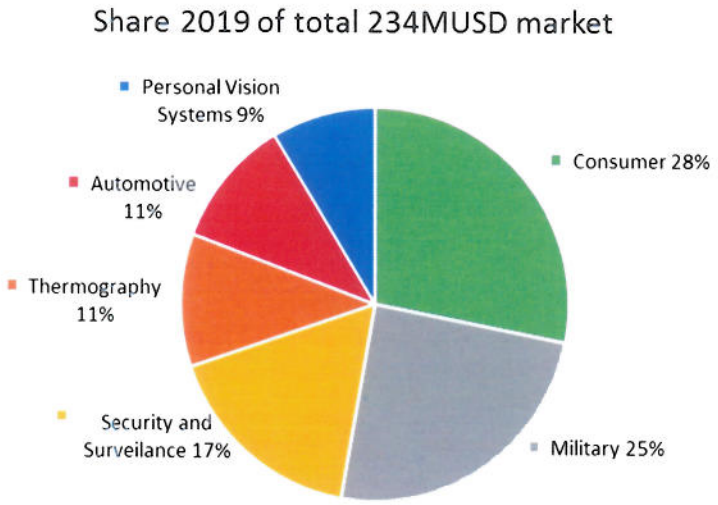

MUSD = $ U.S. dollars, in millions

CAGR = cumulated annual growth rate

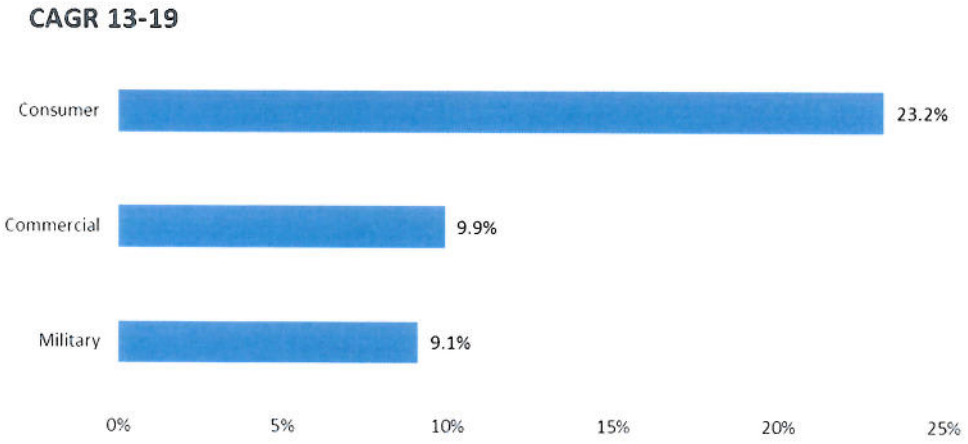

Examples of Foreign Optics Producers

Demonstrated technology and production capabilities equivalent to or exceeding U.S. industry.

Contents

Examples of Foreign Blanks Products 13
Photonics Sense – Germany 13
OJSC – Russia 13
Examples of Foreign Window Products 13
Diameter > 5" 13
Wavelength – Singapore 13
Examples of Foreign Lens Assembly Products 13
Focal Length Greater than 100mm 13
Shalom EO - Israel 13
Sunny Ningbo – China 14
Wavelength – Singapore 15
Resolve Optics – United Kingdom 15
Tamron – Japan 15
12 micron pixels or smaller 15
Ophir - Israel 15
Additional Chinese Optics Producer Information 15

Examples of Foreign Blanks Products

Photonics Sense – Germany
Germanium blanks up to 500mm (20") diameter
http://www.photonic-sense.com/images/PDF_DB/Germanium_DB_en_Kompromiss_140407.pdf

OJSC – Russia
Germanium blanks up to 200mm (8") diameter
http://www.made-in-zelenograd.com/companies/ojsc-germanium/#page4
and
http://www.ved.gov.ru/eng/companies/exporters/?action=companyinfo&id=34533

Examples of Foreign Window Products

Diameter > 5"

Wavelength – Singapore

Part No.	Material	Diameter (mm)	Thickness (mm)	Wavelength(um
WGE-142-6-BB	Ge	142.0	6.0	8-12
WGE-150-15-BB	Ge	150.0	15.0	8-12
WGE-152X120X6.54-BB	Ge	152*120	6.5	8-12
WGE-156-6-BB	Ge	156.0	6.0	8-12
WGE-160-6-BB	Ge	160.0	6.0	8-12
WGE-178-6-BB	Ge	178.0	6.0	8-12

http://www.wavelength-tech.com/IR-Optics/WindowIR.jsp

Examples of Foreign Lens Assembly Products

Focal Length Greater than 100mm

Shalom EO - Israel
IR Lenses for 640x480-25um LWIR uncooled FPA Detectors

No.	Module	Focal length (mm)	F #	FOV (H x V)	Focus Mechanism	Flange Back Dist (mm)	Mechanical Connector
9	2120F1.0	120	1.0	7.6°x5.7°	Motorized	20	M54x1
10	3123F0.8	123	0.8	7.4°x5.6°	Motorized	20	2.325" -12TPI
11	2150F1.0	150	1.0	6.1°x4.6°	Motorized	20	M54x1
12	3180F1.2	180	1.2	5.1°x3.8°	Motorized	14.8	Flange
13	2200F1.3	200	1.3	4.6°x3.4°	Motorized	20	2.325" -12TPI
14	3275F1.4	275	1.4	3.3°x2.5°	Motorized	20	2.325" -12TPI

http://www.shalomeo.com/product/thermal-imaging/ir-lenses-for-uncooled-thermal-imaging-cameras/lens-for-640x480-25um-fpa-19.html

Dual FOV and Zoom Lenses for 640x480-17um LWIR uncooled FPA Detectors

.	Module	Focal Length (mm)	F#	FOV (H x V)	Focus Mechanism	Flange BackDist (mm)	Mechanical Connector
1	DF-22.6F0.9-114.5F1.0 Double FOV	22.6	0.9	24°x18°	Motorized	32	flange
		115	1.0	4.8°x3.6°			
2	DF-44F1.0-132F1.1 Double FOV	44	1.0	12.5°x9.4°	Motorized	15	M45x1
		132	1.1	4.2°x3.1°			
3	DF-42/0.82-107/1.0 Double FOV	42	0.82	13°x9.8°	Motorized	30	flange
		107	1.0	5.1°x3.9°			
4	DF-51/1.1-153/1.2 Double FOV	51	1.1	10.8°x8.1°	Motorized	15	M45x1
		153	1.2	3.6°x2.7°			
5	DF-25/0.9-75/1.0 Double FOV	25	0.9	21.7°x16.4°	Motorized	19.67	2.325"- 12TPI
		75	1.0	7.3°x5.5°			
6	DF-50/0.9-150/1.0 Double FOV	50	0.9	11°x8.2°	Motorized	28	flange
		150	1.0	3.7°x2.7°			
7	DF-35/0.9-140/1.0 Double FOV	35	0.9	15.6°x11.7°	Motorized	13.5	flange
		140	1.0	3.9°x2.9°			
8	Zoom-25/0.95-75/0.95 countinuous	25~75	0.95	8.3°~24.6° x 6.2°~18.5°	Motorized	20	flange
9	Zoom-20/1.1-60/1.1 countinuous	20~60	1.1	10.4°~30.4° x 7.8°~23.1°	Motorized	20	M54x1
10	Zoom-53/0.8-105/0.94 countinuous	25~75	0.8 ~ 0.94	5.9°~11.7° x 4.4°~8.8°	Motorized	20	M54x1

http://www.shalomeo.com/product/thermal-imaging/ir-lenses-for-uncooled-thermal-imaging-cameras/double-fov-and-zoom-ir-lenses-2.html

Sunny Ningbo – China

F(Mm)	F#	Sensor	T 8-12	Fov(°)	Focus
130	1.2	640*480 17μm	>84%	4.8(H)×3.6(V)	Motorized
150	1	640*480 17μm	>87%	4.1(H)×3.1(V)	Motorized
150	1.2	384*288 25μm	>84%	3.7(H)×2.8(V)	Motorized
f37.5-f150	1.2	640*480 17μm	>86%	f37.5=16.9(H)×12.6(V), f150=4.2(H)×3.1(V)	Motorized Continuous Zoom
f60- f180	1.4	640*480 17μm	>86%	f60=10.4(H)×7.8(V), f180=3.5(H)×2.6(V)	Motorized Continuous Zoom

http://www.sunnyoptical.com/en/009002008/p324.html

Wavelength – Singapore

Part No.	Focal Length(mm)	F/#	Detector	Wavelength	Focus Type
Infra-LW1501.0-17	150	1.0	640x480, 17um	8um-14um	Manual Focus
Infra-LW1501.2-17V2	150	1.2	640x480, 17um	8um-14um	Manual Focus
Infra-LW1501.4-17	150	1.4	640x480, 17µm	8um-14um	Manual Focus
Infra-LW1502.0-17	150	2.0	640x480, 17µm	8um-14um	Manual Focus

http://www.wavelength-tech.com/IR-Optics/LWIRInfraLens.jsp

Resolve Optics – United Kingdom

Focal Length	F/Number	Focus Type	Spectral Range
120	1.2	Fixed	8-14um

http://www.resolveoptics.com/ir-lens-320-000.html

Tamron – Japan

Detector Size 17µm pixel pitch VGA (640×480)	Standard M34 Screw		Model No.	Focal Length	F number	Max object distance (m)
			▸ LVZ3X3516N/A	35-105mm	F/1.6	3,083

http://www.tamron.biz/en/data/thermal/index.html

12 micron pixels or smaller

Ophir - Israel

Focal Length	F/Number	Focus Type	Spectral Range	Part Number
18mm	1.0	Fixed	8-12um	65058
25mm	1.0	Manual	8-12um	65136
35mm	1.0	Manual	8-12um	65141
50mm	1.0	Manual	8-12um	65163
75mm	1.0	Manual	8-12um	65022
100mm	1.0	Manual	8-12um	65040
150mm	1.0	Motorized	8-12um	65043

http://www.ophiropt.com/infrared-optics/catalog-infrared-lenses/lenses-for-uncooled-cameras

Additional Chinese Optics Producer Information

Finished Optics

Yunnan KIRO, China

http://www.kiro.cn/English/ProductList6939.html?PTid=114

Beijing LensTech, China

http://www.lenstec.net/en/www/product.asp

Nanjing Wavelength Opto-Electronics
http://wavelength-tech.en.alibaba.com/productgrouplist-218403840/IR_Optics.html

Germanium
Yunnan KIRO, China
http://www.kiro.cn/English/ProductView064e.html?Pid=27

China Germanium Industry News Coverage
http://www.prnewswire.com/news-releases/global-and-china-germanium-industry-report-2013-2016-300045533.html

United Technologies Corporation
1101 Pennsylvania Avenue, N.W.
10th Floor
Washington, D.C. 20004-2545

Submitted Via Email

July 6, 2015

Regulatory Policy Division
Bureau of Industry and Security
Room 2099B
U.S. Department of Commerce
Washington, D.C. 20230

Attn: RIN 0694-AF75

Re: Revisions to the Export Administration Regulations (EAR): Control of Fire Control, Range Finder, Optical, and Guidance and Control Equipment the President Determines No Longer Warrant Control Under the U.S. Munitions List (80 Fed. Reg. 25798, May 5, 2015)

Dear Sir/Madam:

United Technologies Corporation ("UTC")[1] appreciates the opportunity to submit these comments on the implementation of Export Control Reform ("ECR") with respect to fire control, range finder, optical and guidance and control equipment. UTC strongly supports the Administration's goals of creating a positive, transparent, and predictable structure within the categories of the Commerce Control List ("CCL"), and continually aligning this structure and associated export control policies with changing technological and market conditions. UTC comments primarily focus on the themes and concepts associated with the proposed amendment to U.S. Munitions List ("USML") Category XII and corresponding CCL revisions, including the imposition of restrictive controls on infrared focal plane arrays ("IRFPAs") and read out integrated circuits ("ROICs"), the introduction of regional stability controls, and the removal of beneficial license exceptions.

The proposed CCL revisions and increased controls are entwined with the Department of State's proposed revisions to USML Category XII. UTC believes the revised USML Category XII does not currently meet the goals of ECR. The proposed changes capture items currently in production that are in normal commercial use (e.g., one-dimensional linear arrays with more than 640 detector elements, two dimensional camera cores, EO-only and EO/IR gimbals, wafers and

[1] UTC is a global, diversified corporation based in Hartford, Connecticut, supplying high technology products and services to the aerospace and building systems industries. UTC's companies are industry leaders, among them Pratt & Whitney, Sikorsky, UTC Aerospace Systems, UTC Building & Industrial Systems, and United Technologies Research Center.

infrared lenses) by using non-military performance parameters for control (e.g., infrared wavelength, resolution, and stabilization). The increased CCL controls related to thermal imaging and night vision items, which may be required to ensure interagency review of BIS license applications, appear unnecessary as few items seem to transition from the USML to the CCL. The increased level of control, including requiring licenses for Canada in certain ECCNs, may negatively impact U.S. industry.

As described in more detail below, UTC believes the proposed revisions to the USML and the CCL's Export Control Classification Numbers ("ECCN") 6A002, 6A003, 6A615, 6D994, 6E001 and 6E994 could be modified and clarified to better support the goals of ECR.

I. Jurisdiction and EAR Control of Infrared Focal Plane Arrays

The revised USML Category XII(c) removes "specifically designed for military applications" and develops a positive list for infrared focal plane arrays ("IRFPAs"), image intensifier tubes, night vision, electro-optic, infrared and terahertz systems, equipment and accessories. UTC respectfully disagrees with the proposed control parameters (e.g., stabilization, wavelength, and resolution) used in Category XII(c), which are not inherently military parameters and would result in capturing items in normal commercial use. UTC recognizes the difficulty in developing positive control parameters and recommends DDTC and BIS consider the use of "specially designed" for military applications, which should allow more items to transition to or remain controlled on the CCL.

Category XII(c)(2) captures unencapsulated photon detectors, microbolometer detectors, or multispectral detector IRFPAs having a peak response within the wavelength range exceeding 900 nm but not exceeding 30,000 nm. The infrared spectrum is not a military parameter. Commercial products and applications require the ability to sense or "see" in the infrared. One-dimensional unencapsulated IRFPAs are sold and used for commercial applications such as spectroscopy telecommunications channel monitors. UTC strongly recommends these items be controlled by the Department of Commerce.

One-dimensional IRFPAs (i.e., linear array) consist of a PDA strip mounted next to one or two readout integrated circuits epoxied to ceramic, mounted on a TEC or copper shim, and wire-bonded to package pins. Unencapsulated one-dimensional IRFPAs are used extensively by UTC's domestic and international customers for commercial spectroscopy applications. InGaAs is the most common material used in infrared spectroscopy for studying light in the wavelength range of 900 nm to 1700 nm. Unencapsulated linear arrays are sold to OEM spectroscopy system manufacturers for incorporation in LN2 or TEC vacuum Dewar assemblies or to have miniature optical spectrometer components installed within the same package as the IRFPA with the complete assembly encapsulated as a complete fiber optic spectrometer.[2] Photoluminescence, Electroluminescence, Near Infrared ("NIR"), Fluorescence and Raman Spectroscopies, Laser Diode and fiber optic transmitter characterization, and machine vision for sorting based on the spectral features are among the most common commercial infrared

[2] Supporting sales data is UTC Aerospace Systems' Proprietary and can be provided to the U.S. government upon request.

spectroscopy applications. UTC is not aware of military demand or fielded military systems using unencapsulated one-dimensional arrays.

The design and fabrication of current EAR-controlled linear-array ROICS will have to be fabricated in higher-cost ITAR-qualified facilities as a result of the new regulations. An example is a 2048 pixel linear array developed for civil biomedical spectrometers and for industrial inspection instrumentation, and currently fabricated off-shore. Reclassification of this ROIC, which is a part of a commercial linescan camera, may result in transferring fabrication files for the GL2048LC1 from the off-shore facility, incurring higher costs for ITAR handling, and extra costs for qualification of a new supplier and processes.

One-dimensional photon detector IRFPAs are in normal commercial use and the proposed detector element control parameter in Category XII(c)(3) is not a military discriminator. The subparagraph captures encapsulated one-dimensional photon detector IRFPAs that have more than 640 detector elements no matter the pixel geometry (current EAR controls only control 1-D arrays with pixel height equal or less than 3.8 times the pixel pitch). Encapsulated one-dimensional photon detector IRFPAs up to 2048 detector elements are currently used for commercial applications, including FTIR/NIR interferometry, NIR spectroscopy, biomedical analysis, and industrial process control. Most minerals contain distinct absorption features in the SWIR/NIR, making this region of the spectrum the best candidate for spectroscopic analysis in many applications. Hydroxyl-bearing minerals, sulfates, and carbonate materials produced naturally on Earth are easily identified through SWIR spectroscopy. Clays in general, like Kaolinte and Alunite, have strong absorption near 1400 nm and 2200 nm. Plastics and pharmaceuticals can be sorted based on spectral features between 1100 and 2500 nm. These examples are also primarily commercial applications. UTC does not advertise/market encapsulated one-dimensional photon detector IRFPAs for non-commercial applications because there is limited military demand.

Typical military applications for surveillance, field laser detection, fire control, and targeting are not using one-dimensional IRFPAs because they have lower sensitivity than two-dimensional detectors. As an example, when the one-dimensional detector exposure time is set for sensitivity similar to that of a typical two-dimensional detector, the acquisition time for a useful image is 100 to 1000 times longer for a one-dimensional detector when compared to a two-dimensional detector (depending on the number of lines in the image). For a sensitive exposure time used for a 30 fps 2-D detector, using the same exposure time for one line time would result in 30 times less sensitivity and, if there were 100 lines in the image height, the frame time would be 3.3 seconds. For most military purposes that frame rate would be unusable.

Since 2003 when 1024-pixel arrays were first offered, military end users or related organizations accounted for only 1.9% of UTC sales of one-dimensional photon detector IRFPAs with more than 640 detector elements. Additionally, just over 20% of sales of encapsulated one-dimensional IRFPAs that have 1024 pixels were for export (see Figure 1 below).

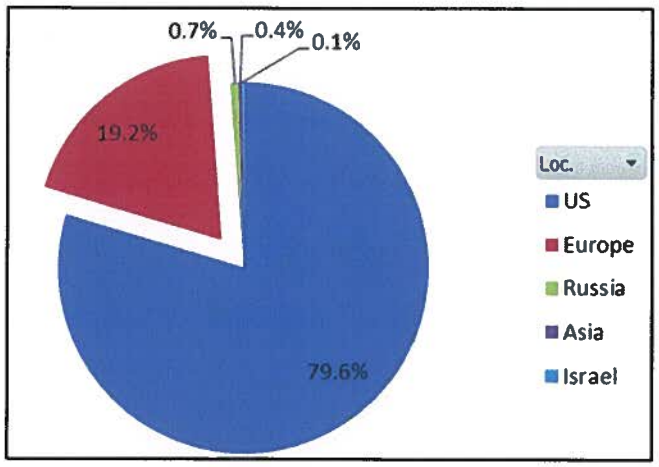

Figure 1- 1024 Linear Array Sales (2003-2015)

UTC recommends that DDTC delete Category XII(c)(3) due to the overwhelming commercial nature of one-dimensional photon detector IRFPAs with more than 640 detector elements and peak response in the 900nm – 2500nm wavelength range. These items should continue to be controlled under the EAR and the current EAR 6A002.a.3.d.2.a control parameters should remain unchanged. If the Department determines that there is a need to maintain Category XII(c)(3), UTC urges DDTC to control only "specially designed" permanently encapsulated one-dimensional photon detector IRFPAs described in paragraph (c)(2) of Category XII. Using "specially designed" is the only meaningful way to distinguish between commercial and military items. The number of pixels (e.g., 640 detector elements) is an arbitrary, non-military control and should not be used as it captures items in normal commercial use. All other one-dimensional photo detector IRFPAs should be controlled by BIS on the CCL.

II. Gimbal and Imaging System Controls

The revised control parameters for gimbals and infrared imaging systems in USML Category XII(c)(10)-(11) and XII(c)(16)(i) use root-mean-square ("RMS") stabilization, number of axes of active stabilization, and, in some instances, whether they are "specially designed" for items controlled under Category XII of the USML. The two positive control parameters (i.e., RMS stabilization and axes of active stabilization) should not be used as military performance discriminators. The parameters are not inherently military, control EO/IR and EO-only gimbals and imaging systems that are in normal commercial use, and EO/IR and EO-only gimbals and imaging systems that are available from foreign manufacturers. EO-only and EO/IR gimbals and image systems are used to fit a wide range applications for manned and unmanned systems, providing real-time imagery for ISR, law enforcement, civil SAR, aerial firefighting, aerial surveying, infrastructure inspection, pipeline and utility surveillance, mapping, surface vehicles and atmospheric sciences.

UTC recommends DDTC not use parameters with no clear military bright line (e.g. stability) but develop positive ITAR-control parameters focused on payloads and functions that make a gimbal/imaging system inherently military. There are certain IR system functions that

are exclusively military and should remain ITAR-controlled. The proposed revision to USML Category XII appropriately includes the following function-based capture criteria:

- Automated missile detection or warning;
- Hardening to withstand electromagnetic pulse (EMP) or chemical, biological or radiological threats;
- Incorporation of mechanisms to reduce signature; and
- Incorporation of an IT beacon or emitter specially designed for IFF.

UTC recommends including the following features that may better distinguish military systems and equipment that warrant control on the USML:

- Laser target-designator payloads that are compatible with laser guided munitions;
- Integration of EO/IR systems with weapons;
- Incorporation of countermeasures not listed above (e.g., protective filters); and
- Ability to simultaneously track multiple targets.

USML Category XII(c)(10) controls gimbals with two or more axes of active stabilization having a minimum RMS stabilization better than 200 microradians and specially designed for articles controlled on the USML. Certain items may transition to the CCL in situations if the gimbal meets the specially designed release provisions of Section 120.41(b). The same specially designed language is not used in subparagraph XII(c)(11) for gimbals with two or more axes of active stabilization and minimum RMS stabilization better than 100 microradians. The gimbals in XII(c)(11) are controlled because of a stabilization level used in commercial and foreign available systems.

USML Category XII(c)(16)(i) enumerates additional controls for infrared imaging systems incorporating or specially designed to incorporate a USML Category XII article, having two or more axes of active stabilization, and a minimum RMS stabilization better than 200 microradians. This proposal appears duplicative of Category XII(c)(10) and introduces confusion over proper classification. The level of stabilization of an IR imaging system is again used as a military control parameter. Specially designed is invoked at the system and equipment level when the system or equipment is specially designed to incorporate articles controlled in Category XII. IR imaging systems or equipment in commercial use may continue to be subject to ITAR control.

UTC respectfully requests BIS review foreign availability information for gimbals and infrared imaging systems before finalizing control parameters that may continue to hinder U.S. industry. Table 1 highlights foreign gimbal manufacturers that develop, market, and sell non-ITAR controlled EO/IR gimbal systems with performance that significantly exceeds DDTC's current proposal. Some of the systems, as noted below, have stabilization levels better than 20 microradians.

Table 1 - International Gimbal Manufacturers

Company	Country	Product	Manufacturers Product Information
Controp	Israel	U-STAMP and D-STAMP	http://www.controp.com/default.asp?catid={0560E7DD-45DB-4E27-AD8B-6A2A94271256}&details_type=1&itemid={2B40E626-2160-49E0-9378-E3AADD46D8BF}
IAI - Tamiam	Israel	POP-family of gimbals	http://www.iai.co.il/2013/18688-16661-en/IAI.aspx
SweSystem	Sweden	Seven gimbal options with 4-5 axis stabilization and up to ~ 15 mrad stabilization	http://www.swesystem.se/products.html
PolyTech	Sweden	Long range and compact systems	http://www.polytech.se
Micropilot	Canada	MP-DAY/NIGHTVIEW	http://www.micropilot.com/products-cameras.htm
Integrated Dynamics Aerospace	Pakistan	Three stabilized camera gimbals in the same size class as TASE family	http://www.idaerospace.com
DST Control	Sweden	OTUS family of gimbals	www.dst.se
PEIPORT	Hong Kong	SkyEye 2X with 4 active-axis and less than 20 microradians stabilization	http://www.peiport.com/download/Gimbals/Catalog/2X_EN.pdf
M-TEK	South Africa	Four axis stabilized gimbal	http://www.mtek.co.za/products/positioners/four-axis-gimbals-for-stabilized-systems/
UAV Vision	Australia	Three EO/IR gimbals	http://uavvision.com/product-cat/gimbals/
Xenics	Belgium	Pumair EO/IR gimbals	http://www.xenics.com/en/pumair

UTC is specifically concerned that the proposed controls will hamper sales of U.S.-origin EO-only and EO/IR gimbals, IR imaging systems, and commercial helicopter sales. Commercial helicopter applications require performance well beyond the proposed ITAR-controls as detailed below.

Commercial Helicopter Applications

Gimbals with 2 or more axes of active stabilization with performance significantly better than 200 microradians are currently used in EO/IR systems on civil helicopter platforms for non-military applications. The stabilization performance of some gimbals being used for non-military purposes is 5 microradians. Table 2 provides examples of non-military applications where the stabilization is significantly better than 200 microradians. These examples reflect the

use of EO/IR sensor systems on the Sikorsky S-92 ® helicopter and the S-76 ® helicopter, which are both civil model helicopters.[3] The helicopters in the examples are being operated for civil Search and Rescue ("SAR").

Table 2 – Commercial SAR Platforms/Civil SAR Applications

Model	Contractor	Mission	EO/IR System[4]
S-92	Bristow	U.K. Coast Guard	FLIR Systems, Inc. 380-HD
S-92	CHC	Irish Coast Guard	L3 Wescam MX-15
S-76	N/A	Japan Coast Guard	FLIR Systems, Inc. Star Safire HD

Civil SAR is becoming more prevalent around the world as countries (e.g., United Kingdom) are deciding to contract with civilian organizations to provide civil SAR services.[5] Some governments do not have helicopter SAR capability. In the off-shore oil and gas arena there are some companies establishing organic SAR capability. These companies are contracting with civilian helicopter operators or are equipping their own aircraft to establish civil SAR capabilities.

Improved levels of stabilization contribute to enhancing SAR operational capability and increase the probability of successful mission outcomes. Higher levels of stabilization translate to lower levels of image jitter, which provides better image quality particularly at longer ranges. In addition, improving the ability to discern obstacles in low light and/or low visibility, particularly at low altitudes, reduces operational risk to aircraft and crew.

Sophisticated EO/IR systems are manufactured worldwide. A number of foreign manufacturers advertise EO/IR systems with stabilization better than 25 microradians. See Table 3 for additional foreign availability information.

Table 3 – Foreign Available EO/IR Systems

System[6]	Manufacturer	Country	Resolution (Thermal Imager)	Stabilization (lower values reflect higher performance)
MX-15[7]	L3 Wescam	Canada[8]	640 x 512	<5 (typically)

[3] S-92 and S-76 are registered trademarks of Sikorsky Aircraft Corporation.
[4] Listed model designations are not necessarily the full model designation.
[5] The Bristow Group is an example of civilian organization providing civil SAR services: http://bristowgroup.com/helicopter-services/uk-sar/uk-sar-awards/
[6] The table relies primarily upon manufacturer's information available on the Internet.
[7] See http://www.wescam.com/wp-content/uploads/PDS-MX-15-63133M-July-2014.pdf
[8] ITAR controlled. Sikorsky understands that the system contains a number of U.S. components.

Toplite EOS[9]	Rafael	Israel	640 x 512 or 1280 x 1040	<25 µrad
Agile 2[10]	Thales Optronique	France	320 x 240 or 640 x 512	3 axis
Euroflir 350[11]	Sagem	France	680 x 512	4-axis stabilized gimbal
MOSP3000-HD[12,13]	IAI	Israel	1280 x 1024	<25 µrad
DCoMPASS[14]	Elbit Systems	Israel	640 x 512	Stabilized system
EOST-46[15]	Selex ES	Italy	640 x 512	≤20 µrad
275-HD[16]	FLIR Systems, AB	Sweden	640 X 512	4 axis active stabilization
350-HD[17]	FLIR Systems, AB	Sweden	640 X 512	4 axis active stabilization

Sikorsky uses EO/IR systems on its SAR-configured commercial helicopters that are presently captured in USML Category XII(c). When these ITAR-controlled EO/IR systems are installed on a commercial helicopter, the aircraft as a whole is captured in USML Category VIII(a)(11) which controls aircraft incorporating ITAR-controlled missions systems. ITAR licensing is often viewed in a negative light when competing directly against foreign manufactures/providers in international markets.[18]

UTC recommends that the U.S. government control gimbals and infrared imaging systems that are "specially designed" for military use defined by functions that are peculiarly military functions (e.g., laser target designator payloads compatible with laser guided munitions, integration of weapons systems, and implementing counter measures) on the ITAR. All other infrared imaging systems and gimbals should be controlled on the CCL under ECCNs 6A003 and 6A004, respectively. ECCN 6A003 and 6A004 are subject to National Security (NS Column 2) control, and ECCN 6A003 is also subject to Nuclear Nonproliferation (NP) and Regional Stability (RS) controls.

This proposal is consistent with internationally recognized military and dual-use control parameters found in the Wassenaar Arrangement Munitions and Dual-Use List. Gimbals are

[9] See http://www.rafael.co.il/marketing/SIP_STORAGE/FILES/8/1278.pdf
[10] See https://www.thalesgroup.com/en/worldwide/defence/agile-2-and-agile-4-electro-optic-turrets
[11] See *www.sagem.com/file/download/d1650e_euroflir_350.pdf*
[12] IAI: http://www.iai.co.il/2013/18688-16667-en/IAI.aspx
[13] Helicopter Multi-mission Optronic Stabilized Payload (HMOSP) indicates stabilization better than 25 µrad and resolution of 320 x 240.
[14] Elbit brochure currently not available online.
[15] See http://www.selex-es.com/-/eost46-1
[16] See http://www.flir.com/uploadedFiles/flirGS/Surveillance/Products/Star_SAFIRE_HD_Family/Star_SAFIRE_HD_Family/275-HD/flir-star-safire-275-hd-datasheet-ltr.pdf
[17] See http://www.flir.com/uploadedFiles/flirGS/Surveillance/Products/UltraForce_350-HD/flir-ultraforce-350-hd-datasheet-ltr.pdf
[18] Sikorsky intends to separately provide the U.S. government more details, which includes proprietary information.

specifically enumerated by the WA Dual-Use List in 6.A.4.d.3 and include specific control parameters. Infrared imaging or countermeasure equipment that is specially designed for military use is controlled by the WA Munitions List in ML15. This proposal will allow U.S. industry to remain competitive with foreign manufactures and still protect items that provide unique military or intelligence advantages.

III. Jurisdiction and EAR Control of Infrared Camera Cores

A. One-dimensional Linescan Cameras

The proposed change in Category XII(c)(16) will control UTC's SU1024 and GL2048 pixel linescan (one-dimensional) camera families[19] that are in regular commercial use. These digitally-interfaced cameras require machine-vision interfaces (e.g., Camera Link), external computers with displays, and civil-oriented spectroscopy and/or machine vision software to be useful. Development of each generation of these cameras was driven by a medical application called Optical Coherence Tomography ("OCT"). OCT is a technique used to capture microscopic images of the front and back surfaces of the eye. The basic technique is used for eye diagnostics and thin-film industrial measurements for over a decade. Imaging with infrared wavelengths permits deeper imaging in tissue. The medical application drives the development of high line rates in order to capture 3-D volumes between eye movements while imagining the whole retina and to map blood flows in the tissue. Customers include global medical researchers, industrial instrumentation companies, and system manufacturers servicing those applications. No U.S. government or military funding has funded development and only 0.3% of camera sales were to related organizations. The technology and resultant imaging systems are commercial.

Establishing ITAR controls for these commercial items will negatively impact global competiveness as the ITAR requirements will significantly increase the complexity of the transactions. As an example, UTC customers (e.g., U.S. research institutions) employ and/or train non-U.S. persons. The proposed controls will also discourage U.S.-based system integrators that export their systems. Foreign manufactures have 2048-pixel linescan cameras and IRFPAs and 1024-pixel arrays/cameras (see Appendix A). UTC competiveness will be seriously impacted by the proposed amendment, ceding current U.S. manufacturing advantages to non-U.S. manufacturers. Without competitive access to such markets, there will be insufficient return on investment to sustain U.S. competitive advantages in low-dark-current, low-noise photodetectors.

B. Two-dimensional Area Cameras

The revised USML Category XII(c)(12) controls infrared-imaging camera cores and specially designed electronics and optics with certain criteria, but there are no clear military control parameters. Subparagraphs XII(c)(12)(v) and XII(c)(12(vii) control commercially-available, one-dimensional photo detector IRFPAs.

[19] See http://www.sensorsinc.com/products/linescan-cameras/

UTC agrees with the DDTC proposal in Category XII(c)(12)(viii) that camera cores having two-dimensional photon detector IRFPAs with a peak response wavelength range exceeding 900 nm but not exceeding 2,500 nm and less than 111,000 detector elements do not warrant ITAR control because they are in normal commercial use and are inadequate for most military uses. These camera cores should be controlled by the CCL as demonstrated by recent Commodity Jurisdiction final determinations.

Camera cores utilizing two-dimensional photon detector IRFPAs with greater than 111,000 detector elements are still controlled by USML Category XII(c). These camera cores are used for both military and commercial applications and are inherently dual-use items. A list of commercial and dual use applications for camera cores utilizing two-dimensional photon detector IRFPAs are listed below:

- Driver Vision Enhancement
- Aircraft Enhanced Vision System
- Security
  - Perimeter
  - Border Security
  - Bridge/Port
  - Highway monitoring
- Enhanced Flight Vision Systems
- Adaptive Optics
- Telecommunications
  - Laser beam profile
- Thermal Measurements (above 100°C)
- Inspection/Sorting
  - Agricultural Products
  - Plastic Sorting
  - Semiconductors (1280x1024)
  - IC inspection (1280x1024)
  - Solar Cell/Si Ingot
- Spectroscopy (multi/hyper spectral)
- Medical Imaging
  - Optical Coherence Tomography
  - Dental Transillumination
- Infrared Reflectography
  - Ancient Artwork

UTC recommends all camera cores utilizing two-dimensional photon detector IRFPAs with less than 330,000 detector elements as well as any camera core not "specially designed" for military applications transition to the CCL.

There are a number of international sources manufacturing, marketing, and selling non-ITAR controlled cameras. Manufacturers are located in Japan, United Kingdom, Germany, Austria, Israel, France, Belgium, Taiwan, Turkey, and China (see Appendix A).

IV. Parts, Components, Accessories, Attachments, and Associated Equipment

UTC supports DDTC and BIS efforts to develop a revised, positive list for parts, components, accessories, attachments, and associated equipment. A positive USML Category XII(e) that specifically enumerates items for control allows non-sensitive items to move to the EAR. UTC identified parts and components (e.g., mechanical parts for imaging system) that do not directly interface with the core technology of controlled systems that should no longer be ITAR controlled under the revision to Category XII(e). However, there are instances where parts, components, accessories, attachments, and associated equipment currently controlled on the CCL are now enumerated in USML Category XII(e).

A. Wafers for ROICs and IRFPAs

Wafers are controlled by Category XII(e)(3) if they incorporate structures for either a ROIC controlled in paragraph (e)(4)-(5) or an IRFPA or detector elements controlled in paragraph (c)(2). The term "structures" requires clarification to properly articulate what level of processing qualifies as a controlled structure. The parameters in Category XII(c)(2) control IRFPAs and ROICs that are in normal commercial use. This proposed control places an undue hardship on U.S. industry and limits the ability to work with non-ITAR foundries for currently EAR-controlled ROICs and photodiode wafers. ITAR foundries are significantly more expensive due to limited volume and increased compliance documentation costs. Epitaxy wafers for InGaAs/InP detector elements are mostly made by non-U.S. sources.

ROIC and photodiode wafers and the structures on them do not in and of themselves generate uniquely military performance level imagers. The manufacturer's proprietary designs, device operating and processing methods have key impact on device performance. ROIC and photodiode wafers and the structures on them do not provide the keys for producing uniquely military performance level imagers that would be considered U.S. "crown jewel" technology. Manufacturers' proprietary structure designs and processing methods have more impact on device performance. These aspects cannot be simply reversed engineered by persons in possession of complete or partially assembled devices. Mapping the material concentration layers in the photodiodes or the connection nodes of ROICs does not disclose the necessary information to achieve commercial or military performance levels for IRFPA imaging.

Current restrictions on IRFPA-based products induced foreign governments (e.g., France, Taiwan, and Korea) and regional organizations (e.g., EU and ESA) to fund foreign commercial companies (e.g., Xenics, Acatel-Thales, Mikro-Tasarim, Chunghwa, and Kyosemi) to develop indigenous capability and improve photodetectors, both for commercial telecom and general imaging applications. Detector technology is primarily driven by fiber optic telecommunication needs and products are fabricated globally. Added controls on wafers for imaging photodiodes and ROICs will further hinder U.S. companies while providing added incentive to foreign entities to improve their capabilities. Wafers for IRFPA photodiodes and ROICs should not be specifically enumerated in Category XII(e) and UTC recommends that DDTC delete Category XII(e)(3).

B. ROIC Control Issue with USML XII(e)(4)(ii) and XII(e)(5)

USML Category XII(e)(4) and XII(e)(5) effectively control all one-dimensional ROICs that are currently used in IRFPAs for commercial cameras or spectrometers. The ROICS are in volume production for the SWIR band for commercial and civil applications as shown in Sections III (B) and (E) of this document. One-dimensional ROICs differ from two-dimensional ROICs as the readout circuitry is simpler, while having to work with larger photodiode sizes that result in lower sensitivity. One-dimensional ROICs also are designed to support long integration times for spectroscopy and much higher readout rates that support high-speed bio-medical

applications and were controlled as non-ITAR since the early 2000s. The proposed amendment places a heavy burden on U.S. industry with increased documentation and technical data compliance costs and requires the use of more-expensive ITAR-qualified fabrication and design resources. It is not clear what perceived impact on U.S. national security and regional stability warrants this level of control. UTC recommends deletion of paragraph Category XII(e)(4)(i).

Category XII(e)(4)(ii) controls 2-D ROICs with more than 256 elements. This requires ITAR handling of ROIC designs of IRFPA array formats of 2x128 or 16x16 elements. This proposed resolution control is not consistent with subparagraph XII(e)(iii), which permits microbolometers up to 640x512 to be handled under EAR controls. Recent Commodity Jurisdiction determinations have also moved InGaAs formats of up to 640x512 pixels to be controlled under the EAR. Resolution is a poor determinant of detector technology to be controlled, but if used, should recognize that technology evolves across wavelength bands. UTC respectfully requests similar resolution control parameters be applied and a mechanism to adjust the threshold periodically should be implemented as technology and commercial markets change.

In the Note to XII(e)(4), it is stated that ROICs are considered "specially designed" for IRFPAs and, therefore, controlled under ITAR even if the 'detector' is not incorporated in an item on the USML. The move to control subcomponents of inherently dual-use technology as ITAR appears to contradict the goals of ECR by controlling items in normal commercial use and production.

C. Delete or Amend USML Category XII(e)(9)

Infrared lenses, mirrors, beam splitters or combiners, filters, and treatments and coatings are not military parameters for control. Infrared lenses may be purchased worldwide. Lenses are typically standard offerings with infrared cameras, which now may be captured in Category XII(c). DDTC recently determined, via Commodity Jurisdiction ("CJ") requests that some infrared lenses are subject to the EAR. The proposed control in Category XII(e)(9) is not consistent with recent CJ determinations. Additionally, filters may be required specifically for commercial applications. As an example, a 1400 nm bandpass filter may be used with InGaAs cameras to observe water absorption spectrum response range. This filter is not related to a military application or end use and the items should be released to the CCL.

V. Proposed Software Controls

The proposed revisions to ECCNs that control software is far reaching and will significantly impact U.S. industry. As an example, ECCN 6D991 expands the scope of control to capture software for the development, production, or use of all items in 6A002 and 6A003 (i.e., thermal imaging or night vision items) and now controls software that was previously EAR99. This change also imposes a worldwide Regional Stability (RS) control for such software and removes the STA eligibility for software. UTC respectfully requests BIS reconsider the proposed software controls and makes a distinction between the use of a product and the manufacturing know-how, which should be controlled separately.

* * *

For additional information, please contact the undersigned at (202) 336-7467, peter.jordan@utc.com , or Michael Wetzel at (609) 333-8331, michael.wetzel@utas.utc.com.

Sincerely,

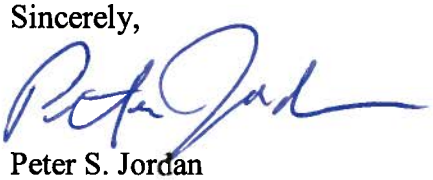

Peter S. Jordan
Director, Senior International Trade Counsel
United Technologies Corporation

Attachments:

Appendix A - Foreign Camera and IRFPA Sources

Appendix A - Foreign Camera and IRFPA Sources

Country	Company	Technologies	Products	Formats	Website
Belgium	Xenics	InGaAs	1D and 2D Cameras, Cores, IRFPAs	320x256x20	http://www.xenics.com/en/products/cameras
			(31 InGaAs variations named Bobcat, Cheetah, Rufus, Cougar, Lynx, XTM, XSW core) - Also offers cooled MCT LWIR, InSb MWIR and T2SL SWIR	640x512x20	
				640x512x25	working on 1280x1024
				512x1x25	
				1024x1x12.5	
				2048x1x12.5	
				3000x1x25	
		µBolometers	2D Cameras, Cores, IRFPAs and pan-tilt imaging systems	320x256x20	http://www.xenics.com/en/products/cameras
			(28 variations named Gobi, Raven, Meerkat, Serval, XTM core, XCO)	640x512x20	
				640x512x25	
				512x1x25	
				1024x1x12.5	
				2048x1x12.5	
		InGaAs	ROICs:		http://www.xenics.com/en/products/cameras
			2D LN2 XPA-1.7-640	640x512x20	
			1-D Xlin-1.7-512	512x1x25	
			Xlin-1.7-1024	1024x1x12.5	
			Xlin-1.7-2048	2048x1x12.5	
China	Shanxi Guohui Optoelectrnic Technology Co. (GHOPTO)	InGaAs	2-D Cameras	640x512x25	http://www.ghopto.com/en/index.php?m=content&c=index&a=show&catid=14&id=63
				320x256x30	http://www.ghopto.com/en/index.php?m=content&c=index&a=show&catid=14&id=64
			FPAs		http://www.ghopto.com/en/index.php?m=content&c=index&a=show&catid=14&id=65
	Debut Optoelectronic Sensors	QWIP	FPAs	640x512x25	http://www.wopuopto.com/en/about.asp?action=intro
				320x256x30	
France	Sofradir	InGaAs	IRFPAs Cactus 640 SW	640x512x25	http://www.sofradir.com/product/cactus-640-sw-2/
			Snake 640 SW	640x512x15	
		MCT for SWIR	IDCAs: Neptune SW/VISIR	500x256x30	http://www.sofradir.com/product/cactus-640-sw-2/
			Saturn SW/VISIR	1000x256x30	
		MCT for MWIR	IDCAs: Axir,	320x256x30/25	http://www.sofradir.com/products/?wavebands=mwir

Appendix A - Foreign Camera and IRFPA Sources

Country	Company	Technologies	Products	Formats	Website
			Daphnia, Epsilon, Galatea, Inspir, Jupiter, Leo, Mars, Scorpio, Uranus MW	640x512x20/15	
				1024x768x10	
				1280x1024x15	
	New Imaging Technologies	InGaAs	2-D ROICs, Camera modules	320x256x25	http://www.new-imaging-technologies.com/ingaas-products.html
				640x512x15	
Germany	**AIM INFRAROT-MODULE GmbH**	MCT for SWIR	IDCAs: ActIR-1024	1024x256	http://www.aim-ir.com/en/main/products/modules.html
			ActIR-384	384x288x24	
			MW/LW	384x288x24	
			MW/LW	640x512x24/15	
			MW/LW	288x6 / 576x7	
	Allied Vision	InGaAs	Cameras G-033	640x512x15	http://www.alliedvision.com/en/products/cameras.html#spectrum/-1/maxFrameRate/-1/resolutionCalc/-1/color/-1/sensorSize/-1/sensor/-1/series/59/text/intf/-1/interfacefilter/-1/legacy//
			G-032	640x512x25	
			G-008	320x256x30	
	EHD Imaging GmbH	InGaAs	SWIR 1" format Lenses	8, 16, 25, 35, 50 mm focal lengths	http://ehd.de/products/specialapplications/NIR_Enhanced_Cameras.html
Ireland	**Raptor Photonics**	InGaAs	2-D Cameras – OWL	320x256x30	http://www.raptorphotonics.com/products/category/swir-vis-swir-cameras-4
				640x512x15	
Israel	**SCD**	InGaAs	IRFPAs, modular cores	640x512x15	http://www.scdusa-ir.com/qi-scd15-swir/
					Working on 1280
		HOT MCT, InSb, XbN	IRFPAs, modular cores named Sebastian, Kinglet, Pelican, Hercules, Blackbird	320x256x20	http://www.scdusa-ir.com/ir-sensors/
				640x512x15	
				640x512x20	
				640x512x25	
				1280x1024x15	
				1920x1536x10	
Japan	**Hamamatsu**	InGaAs	1-D IRFPAs (28 versions)	128x1x50	http://www.hamamatsu.com/us/en/product/alpha/l/4005/4208/4121/index.html
				256x1x50/25	
				512x1x25	
				1024x1x25 sq&tall	
			2-D IRFPAs (4 versions)	64x64x50	http://www.hamamatsu.com/us/en/product/alpha/l/4005/4208/4121/index.html
				128x128x50/20	
			2-D Cameras C10633-13, -23, 034, -50	320x256x30	http://www.hamamatsu.com/us/en/product/category/5000/5005/index.html#camera_type=0&wavelength=3
				640x512x20	
	Artray Co., LTD.	InGaAs	2-D cameras	320x256x30	http://www.artray.us/ingaas.html
				640x512x25	
				128x128x20	
Spain	**New Infrared Technologies**	PbSe	1-D & 2-D IRFPAs and	64x1	http://www.niteurope.com/en/tachyon-series-fpa-roic-2g.html
				32x32	

Appendix A - Foreign Camera and IRFPA Sources

Country	Company	Technologies	Products	Formats	Website
			Cores for 1 to 5 um	80x80	
Taiwan	**Chunghwa Leading Light Photonics Technology**	InGaAs	IRFPAs	320x256x30	http://www.leadinglight.com.tw/
				640x512x25	
Turkey			2-D ROICs:		http://www.mikro-tasarim.com.tr/products
		Si, InGaAs, MCT	MT6425CA	640x512x25	
			MT6415CA	640x512x15	
			MT12815CA	1280x1024x15	
			MT20415SA	2048x2048x15	
			MT40915SA	4096x4096x15	
			MT40910SA	4096x4096x10	
		µBolometer	MT3825BA	384x288x25	
			MT3817BA	384x288x17	
			MT6417BA	640x480x17	
			MT10217BA	1024x768x17	
			MT6412BA	640x480x12	
		InSb, QWIP, MCT,T2SL (DDA designates dual direct injection array)	MT6425DA	640x512x25	
			MT6415DA	640x512x15	
			MT6410DA	640x512x10	
			MT12810DA	1280x720x10	
			MT6420DDA	640x512x20	
			MT6425DDA	640x512x25	
			MT10225DDA	1024x768x25	
		InGaAs	2-D Cameras		
			MT-USB-CAM-6415	640x512x15	
			NanoCAM-6415	640x512x15	
United Kingdom	**Defense Vision Systems Inc.**	InGaAs	2-D cameras	Same as Photonic Science	http://www.dvsmil.com/index.html
	Photonic Science	InGaAs (also offers Vis-InGaAs & >2.2um cutoff)	2-D Cameras	320x256x25	http://www.photonic-science.com/products/swir-ingaas-cameras.html#
				640x512x15	

UNIVERSITY OF CALIFORNIA

BERKELEY • DAVIS • IRVINE • LOS ANGELES • MERCED • RIVERSIDE • SAN DIEGO • SAN FRANCISCO SANTA BARBARA • SANTA CRUZ

OFFICE OF THE VICE PRESIDENT - RESEARCH AND GRADUATE STUDIES

Research Policy Analysis and Coordination
1111 Franklin Street, 11th Floor
Oakland, California 94607-5200
Web Site: www.ucop.edu/research/rpac/
Tel: (510) 587-6031
Fax: (510) 987-9456

July 6, 2015
(email to publiccomments@bis.doc.gov)

Regulatory Policy Division
Bureau of Industry and Security
U.S. Department of Commerce
14th Street and Pennsylvania Avenue NW., Room 2099B
Washington, DC 20230

RE: RIN 0694–AF75

Dear Sirs/Madams,

The University of California (UC) system, consisting of ten research-intensive campuses and involved in the management of three DOE national laboratories applauds the export reform efforts undertaken by the Bureau of Industry and Security (BIS) and appreciates the opportunity to submit comments in response to the BIS RIN 0694–AF75, *Revisions to the Export Administration Regulations (EAR): Control of Fire Control, Range Finder, Optical, and Guidance and Control Equipment the President Determines No Longer Warrant Control Under the United States Munitions List (USML)*.

We would like to comment specifically on the classification of infrared sensors. While we understand the value of night vision technology in defense applications, we believe that too many infrared sensors would be subject to ITAR control under the proposed regulations, which would greatly affect our academic pursuits and make it more difficult to use them in domestic research or to export to scientific installations outside the U.S., such as astronomical observatories. Some of these devices are already in use and currently EAR controlled. Moving them *from the EAR to the ITAR* seems counter to the intent of the export reforms and adds uncertainty. We recommend that items that do not contain military level components, such as military weapons mounting, stability software, and special packaging, should not be ITAR controlled, and that criteria along those lines should be used for distinguishing between EAR and ITAR controlled night vision technology instead of Focal Point Arrays (FPA) and Image Intensifier Tubes (IIT) Generation. It is our understanding that commercial availability of night vision components and equipment at all size ranges for uncooled FPAs, uncooled cameras, and IIT imagers is widespread, and not limited to U.S. Military contractors.

We are also concerned that the 6E615 “Technology” control of “operation” significantly and unnecessarily constrains research use of infrared cameras. The transfer of technology required to merely operate an infrared camera does not enhance a person’s capability to detect and image infrared light. Similarly, the 6E001 and 6E002 Related Controls (3) “Technology” controls include “testing” and “operation instructions.” We

recommend that “testing” and “operation instructions” be removed as mere access for testing and operation would not enable a person to design controlled infrared sensors.

Thank you for this opportunity to comment. We greatly appreciate your efforts to seek input regarding the transition of Category XII ITAR items to the EAR.

Sincerely yours,

Wendy D. Streitz
Executive Director
Research Policy Analysis & Coordination
Office of Research & Graduate Studies

A Division of Voxtel Inc.

15985 NW Schendel Ave. Ste.200
Beaverton, OR 97006
Phone: 971-223-5646
www.voxtel-inc.com

VOXTELOPTO

Regulatory Policy Division

Bureau of Industry and Security

U.S. Department of Commerce

14th Street and Pennsylvania Ave., N.W.

Room 2099B

Washington, D.C. 20230

publiccomments@bis.doc.gov

Subject: Revisions to the Export Administration Regulations (EAR): Control of Fire Control, Range Finder, Optical, and Guidance and Control Equipment

To Whom It May Concern:

Voxtel appreciates the opportunity to comment on the proposed changes to the EAR. Voxtel is a company of 45 employees located in Beaverton, Oregon. Voxtel, designs and manufactures an array of laser range finding and geotagging products for the commercial and defense industries.

Many US-based technology companies have invested, and are investing in consumer and industrial products which contain geo-location technology that potentially would be controlled under the proposed language of ECCN 6A615(e). These products include eye-safe 3D cameras for autonomous vehicle navigation, geotagging accessories for cameras and sense/avoid sensors for civil UAV's.

To effectively market these products to international and domestic customers requires an export classification of EAR99. This is especially the case for consumer products where export license applications for each end user is not practical.

The proposed ECCN 6A615(e) rule change attempts to severely restrict the type of lasers utilized in commercial geotagging devices. The laser technologies encompassed in this expansive approach most notably include all commercially available eye-safe lasers. These lasers are ubiquitous in telecommunications, medical instruments, diagnostic instruments, surveying, traffic sensors and safety sensors. It is unreasonable to expect that these lasers will not continue to be integrated into laser rangefinders used in target locators by offshore competitors.

As a glaring example, Ricoh introduced the SE-7 module in July, 2012. The SE-7 is a component for Ricoh digital cameras that provides geotagging capability. The SE-7 module integrates directly with attachable laser range finders and includes a built-in compass for directional data capture. Cannon also provides geotagging-enabled digital SLR cameras such as the EOS 6D. Another example of a commercially available target locator that would be controlled by the proposed ECCN 6A615(e) rule, is the Theodolite HD for iPhone and Android smartphones (http://www.hrtapps.com/theodolite/). Theodolite HD is a multi-function app that combines a compass, GPS, map, photo/movie camera, rangefinder, and two-axis inclinometer. Theodolite HD overlays real time information about position, altitude, bearing, range, and inclination on the iPhone's live camera image, like an electronic viewfinder. This app can be purchased

on iTunes for $3.99. Any of these products can easily be integrated with a commercially available laser rangefinder which falls under USML CAT XII (b).

The Department of Commerce proposed ECCN 6A615(e) rule would result in:

- Inadvertent control of geotagging products that are in normal commercial use
- Reduced public safety
- Control of geo-tagging systems that are not controlled on the Wassenaar Arrangement's Munitions or Dual Use List.
- Generate an ambiguous line between the USML and CCL for commercial eye-safe laser rangefinders
- Restrict US companies from competing in international markets with geo-tagging products assembled from commercially available parts
- Significant reduction in US market share for geotagging products

The proposed rule language would categorically exclude eye-safe laser rangefinders for consumer geo-tagging purposes; the language limits lasers to wavelengths below 1000nm. Laser ranging and target location are required for collision avoidance sensors, autonomous navigation, railway safety sensors, traffic control and a host of additional applications where public safety is the primary design consideration. The bulk of commercially available laser rangefinders operate in the spectrum from 905nm to 980nm. All of these devices are intrinsically an eye-safety hazard and handicapped in their performance due to the maximum permissible exposure (MPE) to human beings of the emitted laser wavelength. As described in the chart to the right, these 9xxnm devices, which typically have pulse durations in the nanosecond range, have MPE in the single digit micro-joule per square centimeter range. In stark contrast, a 1550nm laser rangefinder has a MPE in the joule per square centimeter range. In layman's terms, **<u>the 1550nm laser rangefinders are one million times safer for humans than the 9xxnm laser rangefinders</u>**. The eyes of infants and young children are especially sensitive to laser emmisions from 9xxnm laser

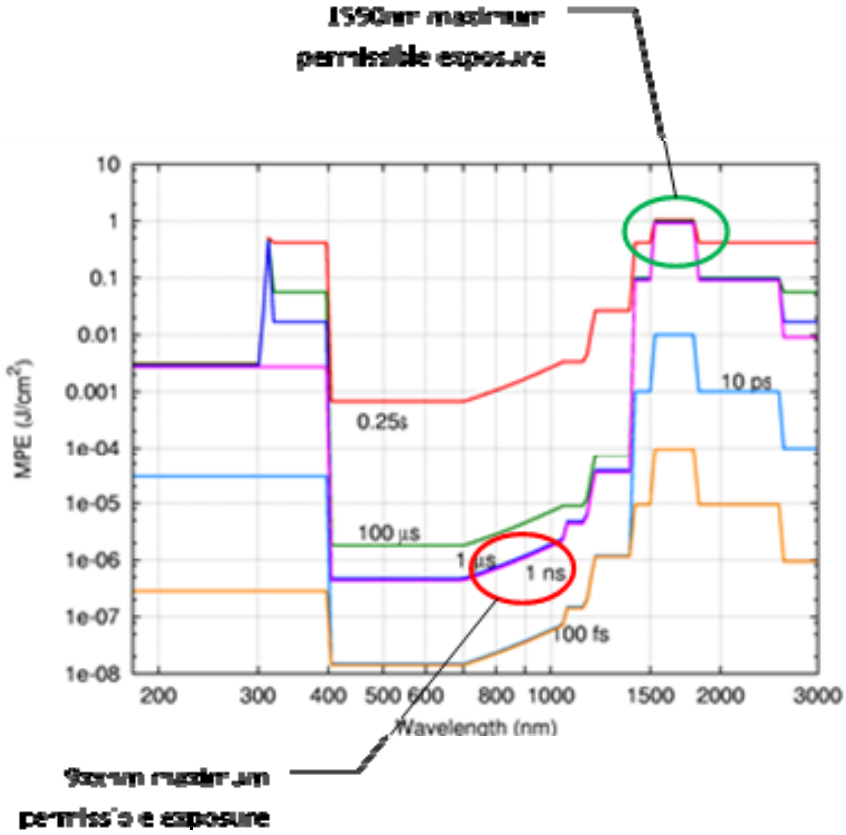

rangefinders. The cornea and eye lenses of young children transmit more radiation back to the retina than for older children and adults. The dilemma presented to geo-tagging system designers, if the proposed rule language is adopted, will be to trade off range and precision for eye-safety.

The primary differentiators between commercial and military target locators are maximum range capability and extended operation in adverse conditions. Relative range capability is determined by a host of system parameters including receiver sensitivity, receiver aperture diameter and laser pulse energy. Maximum range typically has a linear relationship to receiver aperture diameter; however there is a functional limit on the reasonable size of the target locator for portable applications, effectively limiting the aperture diameter. Maximum range also has a linear relationship with laser pulse energy. Laser pulse energy is typically limited by laser gain media constraints, weight and power considerations.

The ability of a target locator to penetrate adverse conditions is directly related to the laser pulse energy. Adverse conditions attenuate the outgoing and return echo. An additional consideration is the accuracy; accuracy has a linear relationship to the pulse duration. For all LRF receivers, there is a threshold number of photons required within a finite period of time (typically < 10ns) to achieve an accurate range result. Consequently, laser pulse peak power is the most significant parameter to achieve critical military and intelligence advantage.

There are a plethora of commercially available laser rangefinders capable of being integrated into geo-tagging products which currently use both q-switched laser sources and lasers emitting at wavelengths greater than 1000nm. Each of these products, and the lasers they incorporate, would be considered ITAR-controlled if the proposed rule is adopted. A partial list of foreign commercial LRF and geo-tagging sources is provided in Appendix A of this document. Each of the foreign suppliers listed incorporate a q-switched, 15xxnm laser.

In addition, there is a market category of geo-tagging, scanning laser rangefinders which also utilize q-switched, 15xxnm lasers. This market segment is bifurcated into terrestrial and airborne applications. A survey of the commercial airborne products is listed in Appendix B.

A partial list of foreign countries which maintain companies that commercially market laser rangefinders and/or geo-tagging instruments with q-switched lasers or lasers with wavelengths greater than 1000nm include:

Country	**LRF Suppliers**
Austria	Riegl Swarovski Optik
Belarus	Pulsar
Canada	Optech Newcon Optik
China	Yiwu TianYing Optical Instrument Co. Jinghua Optical and Electronics Co Hubei Jiuzhiyang Infrared System Co Visionking Optical technology
Finland	Noptel Oy
Germany	Bresser SICK

Japan	Keyence Topcon Nikon
New Zealand	ikeGPS Limited
Singapore	Sintec Optronics
Slovenia	Fotana d.d.
Sweden	Hexagon AB
Switzerland	Vectronix AG Leica Geosystems AG
UK	Spectris

It is clear from these examples that restricting US-based companies from competing in the international marketplace through implementation of the proposed rule language of ECCN 6A615(e) will provide the US government with neither military or intelligence advantage. To the contrary, it will serve to discourage private US investment in the further development of world class LRF and geo-tagging technology, endanger public safety and push solutions development for the applications cited above to foreign nations. This condition will inevitably lead the US government to either fund re-development of products already available on the international market or purchase the technology from potential enemies.

Voxtel believes the US Government can achieve critical military and intelligence advantage, preserve current commercial commodity markets and enable critical public safety technology advances by simply applying the "specially designed" criteria to this category.

Best regards,

George Williams

Attachments:

Appendix A - Commercial Suppliers

Appendix B - Commercial Airborne Suppliers

Appendix A – Commercial LRF Suppliers

	TY-LR71	**JIR-6243/6244**	**ESLRF**	**STIR-6243**	**LRF-3020**	**LRF MOD 15HF**
Laser Pulse Characteristics						
Wavelength [nm]:	1570	1570	1543	1570	1550	1576
Peak Power (kW)		1000		1000		1500
Pulse Energy (mJ)			8			12
Beam divergence [mrad]:		0.8				1.7
Max. pulse frequency [Hz]:	1	10	12	10		5
Accuracy(m)		±1	±2	±1	±3	±1
Max Range (km)	2.5	20	20	20	2	
Temp Range	-40C to 60C	-30C to 60C	-30C to 65C	-30C to 60C	-35C to 55C	
Supplier	Yiwu TianYing Optical Instrument Co. Room 301, 1unit,18Building, Houcheng YiQu, Jiangdong Street Yiwu City,Zhejiang China http://www.nightvisioncn.com	Hubei Jiuzhiyang Infrared System Co. No.16, Wudayuan Road, East Lake Hi-tech District, Wuhan, China www.hbjir.com	Fotana d.d. Stegne 7, 1000 Ljubljana Slovenia www.fotana.si	Sintec Optronics 10 Bukit Batok Crescent #07-02 Singapore 658079 www.sintecoptronics.com	Vectronix Inc. 801 Sycolin Road SE Suite 206 Leesburg, VA 20175 www.vectronix.com	Newcon-Optik 105 Sparks Ave. Toronto, Ontario M2H 2S5 Canada www.newcon-optik.com

Appendix B – Commercial Airborne Scanning LRF Suppliers

Dragon Eye400

LiteMapper 5600

ALS 70-CM

Optech Orion C ALTM

RIEGL VQ-580

RIEGL LMS-Q780

Laser Pulse Characteristics						
Wavelength [nm]:	1024	1550	1064	1541	1064	1064
Pulse length [ns]:	3	3	4		3	3
Beam divergence [mrad]:	0.5	0.3	0.22	0.25	0.2	0.25
Type/class laser:	Class IV	Class 1	Class IV	Class IV	Class 3B	Class 3B
Eyesafe range [m]:	200		159	7	50	0
Recording Methodology						
Scanning method :	Oblique LiDAR	Rotating multi-facet mirror	Oscillating mirror	Oscillating mirror	Rotating mulit-facet mirror	Rotating mulit-facet mirror
Scan frequency [Hz]:	140		200	90		266000
Min. pulse frequency [Hz]:	50000	240	40	50000	50	100000
Max. pulse frequency [Hz]:	400000	240	500	300000	380	400000
Max. field of view [deg]:	40	60	75	50	60	60
Max. number of recorded echoes per pulse:	Programmable >4 range measurements including last	practically unlimited	practically unlimited	4 discrete; unlimited w/ waveform option	practically unlimited	practically unlimited
Full-wave form digitization:	Y	Y	Y	Y	Y	Y
Pulse sampling frequency [GHz]:	1.8	1	1	1		1
recording of intensity of return signal [bits]:	12		8	12	16	16
Multiple pulses in air:	N	N	Y	Y	Y	Y
Uncertainty and resolution						
Pitch and roll pointing precision [deg]:		0.003	0.005	0.005		0
Heading pointing precision [deg]:		0.007	0.008	0.008		0
Elevation precision at 1 km [m]:	0.005	0.07	0.01	0.02	0.05	0
Planimetric precision at 1km [cm]:	30	0.07	0.12		0.05	0
Across-track point spacing at 1km [m]:		0.85	0.3	0.05	0.8	0.1
Operation Characteristics						
Platform:	Helicopter, Fixed-wing	Helicopter, Fixed-wing	Helicopter, Fixed-wing	Helicopter, Fixed-wing	Helicopter, Fixed-wing	Helicopter, Fixed-wing
Min. flying height [m]:	100	30	200	50	50	0
Max. flying height [m]:	1500	1500	1600	1000	5000	3050
Max. acquisition time [hr]:	8	8	6	30	9	8
Warm-up-time [s]:	120	120	240		60	120
Application						
Main applications:	Urban and rural area surveys, city modelling, infrastructure surveying,	Corridor Mapping, City Modelling, Opencast Pits;	Urban mapping, engineering, corridor, etc.	Corridor mapping, engineering, tight-tolerance applications	All typical airborne scanning applications; especially Glacier	All typical airborne scanning applications; Wide Area /

RE: RIN 0694 - AF75: Revisions to the Export Administration Regulations (EAR): Control of Fire Control, Range Finder, Optical, and Guidance and Control Equipment the President Determines No Longer Warrant Control Under the United States Munitions List (USML) 15 CFR Parts 734, 740, 742, 744, 772, and 774

Summary:

Voxtel is a manufacturer of photoreceivers, ranging instruments, and 3D imaging systems, which we provide to a wide range of developers of industrial and consumer products. A small portion of our sales are also devoted to US military system integrators, who benefit from the economies of scale provided by the commercial marketplace. Our business would not be viable if the amendments are put into effect, as the ratio of commercial to US military demand for our products is greater than 100x.

We believe that while severely flawed, the Department of Commerce Export Administration Regulations (EAR) and USML CAT XII be left as is because the proposed amendment of the U.S. Munitions List (USML) Category XII:

(1) Rather than providing a "bright line". Between the USML and the CCL, overreaches the stated purpose of the President's Export Control Reform policies by casting a wider net that captures technologies widely available internationally, placing US manufacturers at and economic disadvantage and weakening the US military supply chain, thereby threatening our war fighters;

(2) Places commercial technology already widely available worldwide, in many cases dominated by foreign suppliers, including laser, laser ranging, and laser imaging systems, on the USML,

(3) Places technologies already used by civilian sectors of the US government and State governments, and the data generated, under export controls, thereby creating a compliance burden of significant proportion and cost.

(4) Will significantly increase the cost of components and systems provided to the US military, or likely, will reduce the US supply base by making US suppliers noncompetitive

(5) Includes technologies developed within the commercial markets, in which the ratio of military to commercial sales is several orders of magnitude lower, thereby increasing the cost of technologies for the warfighter and thereby denying them access to technologies, which might provide advantage and save lives.

(6) Places emerging technologies already being used to enhance our nations well being, including: pollution monitoring, corridor and floodplane mapping, automotive safety, turbine monitoring, and many others, under ITAR control, limiting domestic research and development.

(7) Places eyesafe laser technology, required for effective and safe consumer products, under the control of the USML, forcing manufacturers to less eyesafe laser wavelengths.

Table 1 (attached) includes examples of the technologies and components of these technologies, already commercially available.

Creation of 6A615, military fire control, range finder, and optical equipment

For those items being transferred from Category XII of the ITAR that are not covered by an existing ECCN that have controls for reasons other than AT reasons, this proposed rule would create (or revise in the case of 7A611) the following "600 series" ECCNs: 6A615, military fire control, range finder, and optical equipment;

While we applaud moving commercially available technologies to the CCL, the category 600 series are overly restrictive and are regressive, capturing technologies already in widespread international use. The laser rangefinder controls in USML Cat XII(b)(3) are overly restrictive of widely available technologies essential for our commercial industrial base.

We recommend widening the spectral band from "not exceeding 1,000 nm", to read "not exceeding "1700 nm", as the proposed changes do not create a "bright line".

Our proposed revision would include the eyesafe spectral range which is of US national interest to provide eyesafe laser imaging technologies for applications ranging from automotive, to gesture recognition, and industrial robotics. As the technologies are dominated by foreign suppliers, there is not a compromise to national security.

There are a wide range of laser diodes and VCSELS, exceeding 1064 nm, that are used in illumination systems for surveillance with silicon cameras. As notes in Table 1, laser diode pointers are available, from both domestic and foreign suppliers, with output from 710 nm out to 1350 nm. Given their widespread use for pumping lasers and in telecommunications, it is not clear that it is possible to restrict these components outside of a system.

A search of Google Scholar for "eyesafe laser" since 2014, shows that over 80% of the top 50 references are published by foreign researchers.

There are many foreign sources of q-swtiched 1064 nm lasers,

http://www.cnilaser.com/Q_switched_laser.htm?gclid=CKG19vfKtcYCFUeBfgodoHMN5g (china)

http://www.us.trumpf.com (http://www.us.trumpf.com/en/products/laser-technology/products/solid-state-lasers/pulsed-lasers/trupulse.html)

Foreign sources of pulsed eyesafe (e.g. 1550nm) lasers includes:

Photop (http://www.photoptech.com/main/products_jg/Laser.php) see http://www.photoptech.com/main/products_jg/dpssr.php (China)

http://www.claserinc.com/index.htm (http://www.claserinc.com/lasercomponents/lasercore/EyeSafeOPOKits.htm) (China)

http://www.toplent.com/Erbium%20Glasses.htm (Sydney, Australia.)

http://www.meprolight.com/ (Italy) – (http://www.meprolight.com/default.asp?catid={8C50CFA8-B630-476C-A12A-1E84EA73FE23})

Commercial uses for the eyesafe lasers includes

Dermatology (http://www.alma-germany.com/products/aramis)
http://www.toplaser.com/product/virtuemart/category/6/1550nm-Erbium-Glass-Fractional-Laser-System.html
http://www.syntechlaser.com/xx2.html

OTHER CONSIDERATIONS"
There are a wide number of important technologies which rely on the items proposed for control, which would be surrendered to foreign developers. Placing the technologies on the USML would limit development of a vast array of technologies important for the quality of life and safety of US citizens and is important for US economic growth. Examples of important research put in jeopardy by these regulations include:

- **Eye-Safe Lidar System for Pesticide Spray Drift** Measurement

Gregorio, E.; Rocadenbosch, F.; Sanz, R.; Rosell-Polo, J.R.
Eye-Safe Lidar System for Pesticide Spray Drift Measurement. *Sensors* 2015, *15*, 3650-3670. (SPAIN)
http://www.mdpi.com/1424-8220/15/2/3650
The instrument is based on a 3-mJ pulse-energy erbium-doped glass laser, an 80-mm diameter telescope, an APD optoelectronic receiver and optomechanically adjustable components. In first test measurements, the lidar system has been able to measure a topographic target located over 2 km away. The instrument has also been used in spray drift studies, demonstrating its capability to monitor the temporal and distance evolution of several pesticide clouds emitted by air-assisted sprayers at distances between 50 and 100 m.

- **Eye-safe aerosol lidar at 1.5 microns: progress towards a scanning lidar network**

Scott M. Spuler and Shane D. Mayor
phys.csuchico.edu/~sdmayor/conf_papers/Spuler_Mayor_SPIE07.pdf
A multi-dimensional scanning lidar has been developed for tracking and monitoring aerosol plumes in urban settings. The reliability of the system has been demonstrated and plans for additional units are in place to create a unique scanning lidar network. The paper discusses the current capabilities of the instrument and research underway to extract more information, such as quantitative aerosol properties, from the network.

- **MOBILE LIDAR: THE BENEFITS TO AIRPORTS FROM AN OPERATIONS AND SAFETY PERSPECTIVE**

www.airporttech.tc.faa.gov/

In 2007, the Federal Aviation Administration (FAA) approved the use of airborne lidar (light detection and ranging) in conjunction with aerial imagery that is collected concurrently to perform obstruction surveys following FAR Part 77. http://www.masterbuilder.co.in/application-of-lidar-in-surveying-and-civil-engineering/

Revisions to ECCN 6A008

ECCN 6A008 currently controls radar systems, equipment, and assemblies, including certain laser detection and ranging (LADAR) and light detection and ranging (LIDAR) equipment under ECCN 6A0 08.j. The Department of State's proposed rule would control certain LIDAR, LADAR, and range - gated systems and equipment described in USML Category XII(b)ECCN 6A615.a through .c controls light detection and ranging (LIDAR), laser detection and ranging (LADAR), or laser range - gated systems or equipment having a resolution (i.e., ground point spacing) less (better) than 0.4 m from an altitude above ground level of 16,500 ft. or greater. As resolution is a geometric optics consideration, this is equivalent to 4 cm at 1650 feet, which is in widespread commercial use today – used thoughout industry and government for mapping, excavation, corridor planning, etc. IT is not obvious that this is a "bright line"

Also, as noted in Table 1, almost all LIDAR and LADAR used in mapping, exceeding the requirements of this paragraph, have lasers operating at 1064 nm, and over the last several years, have migrated to eyesafe lasers at 1550 nm.

There are already ubiquitous LIDAR systems or equipment having a resolution (i.e., ground point spacing) of 0.2 m or less (better) from an altitude above ground level of greater than 16,500 ft (about 4000 meters), and incorporating or specially designed to incorporate a gimbal mounted transmitter or beam director (see Table 1).

While dependent on optics and scanner control, this specification is largely met by system calibration. Instruments like the Leica ALS70-HP High-Pulse-Rate Airborne LIDAR
Product Specifications (http://www.leica-geosystems.com/en/Leica-ALS70-Airborne-Laser-Scanner_94516.htm) readily achieve this accuracy, but this specification is only relevant for a LIDAR system mounted on an airborne platform and should be restricted as such.

The USGS (http://lidar.cr.usgs.gov/) and the NOAA National Geodetic Survey (http://www.ngs.noaa.gov/corbin/class_description/ Lidar_presentations.shtml) has LIDAR data obtained with such systems. They are mostly obtained using services purchased from vendors integrating mostly foreign LIDAR systems (Leica, Optech, etc.) LIDAR instruments, using laser and ranging laser devices with performance controlled by this paragraph.

A list of existing international vendors manufacturing, using, publishing, and consuming data exceeding this specification are at (http://lidar.cr.usgs.gov/knowledge.php)

Revisions to ECCN 6E990 / Addition to Section 740.2: We recommend not placing controls over ROICS, as it places the US military at a significant disadvantage by forcing the supply to foreign sources.

This rule would make technology for production of commodities defined in ECCNs 6A002.a.2 (image intensifier tubes), 6A002.a.3 (certain focal plane arrays), or 6A990 (read - out integrated circuits specially designed for focal plane arrays controlled by ECCN 6A003.a.2) and controlled under ECCNs 6E002 or 6E990 ineligible for any license exception. Such technology is not currently controlled under existing technology ECCNs in Ca tegory 6. Technology controlled under ECCN 6E994 would be subject to an RS control, which would impose a worldwide license requirement.

This new control is problematic for a number of reasons. First, it controls the ROICS more stringently than the IRFPAS they are integrated into. Moreover, by controlling ROIC wafers they are controlled at the semiconductor fab, restricting US companies from using the state of the art (e.g. sub-64-nm) semiconductor processes available worldwide. Similarly 3D wafer stacking and other advanced processing and packaging services are not available domestically or are not available on an ITAR process flow.

There a many foreign ROIC suppliers, and the art of manufacturing low noise pixel amplifiers is well known, with little innovation over the last 20 years. ROIC performance is largely determined by the characteristics of the CMSO technology used, with the highest performance CMOS fabs residing outside the US.

As the advanced CMOS technologies reside outside of the US, this places their use in ROICs outside the reach of US suppliers. There remain only a few domestic semiconductor fabs and it is not clear if more than one is qualified for ITAR controlled wafer processing. IBM was recently sold to Global Foundries. Jazz/Tower is foreign owned, and only recently accommodates an ITAR controlled process flow, and ON Semiconductor.

Moreover, the cost of a new ROIC, using the latest CMOS technologies, is well over $1.5M and takes over 18 months to design and fabricate. In todays economic climate, most government programs cannot afford to amortize these costs. Thus, US FPA integrators will be forced to increasingly turn to foreign ROIC suppliers, as there is insufficient economic forces to engender a US based readout design industry.

For this reason, this paragraph, as written, would put the US military at a severe disadvantage. Most of the imaging market is dominated by foreign companies, and this would further push leadership of imaging technologies to foreign suppliers.

Several foreign suppliers include

- Mikrosens (http://www.mikrosens.com.tr/en/ "Mikrosens' microbolometer is developed to be produced at any standard CMOS or MEMS foundry, leading to cost advantage, simplicity, and flexibility."

- **Sabanci University Readout Integrated Circuit Research Group (http://roic.sabanciuniv.edu/) We are not aware of a similar US based academic group focused on ROICs.**

- Mikro-Tasarim's (http://www.mikro-tasarim.com.tr/) Mikro-Tasarım is a fabless semiconductor company specialized in the development of advanced, high-performance Readout Integrated Circuit (ROIC) and sensors working in various spectral bands (such as UV, visible, NIR, SWIR, MWIR, and LWIR) as well as Application Specific Integrated Circuit (ASIC) products for scientific, industrial, and commercial imaging applications

TABLE 1: PROPOSED CHANGS TO CAT 12 and EXAMPLES OF COMMERCIAL AND FOREIGN SUPPLIER COMPONENTS ON MARKET			
22 CFR Part 121 Paragraph	Technology	Existing Commercially Available Product	Web Site
(b.3.i) Lasers, and laser systems and equipment, as follows: 3) Laser rangefinders having any of the following: (i) Q-switched laser pulse; or (ii) Laser output wavelength exceeding 1,000 nm;	Q-switched and 1064 nm or 1550 nm laser technology	Photop Technologies, Inc (CHINA)	http://www.photoptech.com/main/products_jg/q_switched2.php
		TEEM Photonics (France)	http://www.teemphotonics.com/products.html/infrared-lasers.html
		V-GEN (Israel)	http://www.spectra-physics.com/products/fiber-lasers
		Crystaltechno Ltd (Russia)	www.crystaltechno.com - 1576 nm
		Vextronix (SWISS) VECTOR 21 AERO – 1540 nm, 12 km range - 360° digital compass	http://www.vectronix.ch/html/en/products/handheld_equipment/rangefinders/vector_rangefinder_binoculars/vector_21_aero_the_law_enforcement_device
		Yiwu Tianying Optical Instrument Co., (CHINA) Limited 20km 0.2Hz Continuous Rate Military Eye Safe Laser Rangefinder Binoculars	http://www.made-in-china.com/showroom/hawksoptic/product-detaildbkQsaVKCYWn/China-20km-0-2Hz-Continuous-Rate-Military-Eye-Safe-Laser-Rangefinder-Binoculars.html (1064 nm)
		EOS Optronics GmbH - (Germany) ELRF Eye Safe Laser Range Finder 1.54 µm - 50 – 10000 m	www.eos-aus.com
		Keopsys (France)	http://www.keopsys.com/index.php/en/products-n-services/pulsed-laser/pefl.html
		Jenoptic – 10 km, 1554 nm	http://www.jenoptik.com/en_50427_elem-dp_10k
		Also see Table 2	
(b2) Lasers, with a laser output exceeding 710 nm	Laser illuminators with greater than 710 nm	Electrophysics 808-nm-emitting laser diode integrated with a thin-sheet optic and holographic diffuser.	www.electrophysics.com/.../WP-App%20Analysis%20of%20Near-IR%2.
		Laser Pointers - Available in three infrared light frequencies of 808nm, 980nm, 1064nm, as well as 1342. Includes FDA approval, air cooling, high stability and efficiency diode, backed warranty, and a long expected life time. - See more at: http://www.biglasers.com/infrared-laser-pointer#sthash.EOHXku8H.dpuf	"IR1" Laser Pointer 808nm - 980nm - 1064nm - 1342nm - See more at: http://www.biglasers.com/infrared-laser-ointer#sthash.EOHXku8H.dpuf
		Hamamatsu - High-power Laser Diode Bar Module	http://www.hamamatsu.com/jp/en/L8413-50-808.html
		Youtube	https://www.youtube.com/watch?v=hhHhdnEis1k
		JDSU	http://www.jdsu.com/en-us/Lasers/Products/diode-lasers/Pages/default.aspx#.VUql5ZOYEU0
		Excelitas (Canada)	http://www.excelitas.com/Pages/Product/Pulsed-Laser-Diodes-for-Near-Infrared-NIR-750-nm-950-nm.aspx
B4. (4) Targeting or target location systems or equipment incorporating or specially designed to incorporate a laser rangefinder controlled in paragraph (b)(3) of this category, and incorporating or specially designed to incorporate a Global Navigation Satellite System (GNSS), guidance or navigation article controlled in	Rangefinders with GNSS	Trimble ax60 airborne lidar – 4700 m, 2 cm accuracy, < 20 cm 9.25 mrad beam divergence - Trimble AP50 GNSS/IMU	http://www.trimble.com/Imaging/AX60.aspx

paragraph (d) Guidance or navigation systems (e.g., inertial navigation systems, inertial measurement units, inertial reference units, attitude and heading reference Having a circle of equal probability (CEP) of position error rate less (better) than 0.35 nautical miles per hour; systems) as follows Having a heading error or true north determination of less (better) than 0.50 mrad secant (latitude) (0.02865 degrees secant (latitude)); or (iii) Specified to function at linear acceleration levels exceeding 25 g;			
(b6) Light detection and ranging (LIDAR), laser detection and ranging (LADAR), or range-gated systems or equipment, incorporating or specially designed to incorporate an article controlled in this subchapter Note to paragraph (b)(6): This paragraph does not control LIDAR systems or equipment for civil automotive applications having a range limited to 200 m or less.	LIDAR, except auto less than 200 m	Optech ILRIS Terrestrial Laser Scanner range capability (exceeds 3000 meters)	http://www.optech.com/index.php/product/optech-ilris/
		Topcon GLS-1500 – ranging past 330 meters; 3" at 50m	https://www.topconpositioning.com/mass-data-collection/laser-scanners/gls-2000
(b8i) LIDAR, LADAR, or other laser range-gated systems or equipment, as follows Systems or equipment having a resolution (i.e., ground point spacing) of 0.2 m or less (better) from an altitude above ground level of greater than 16,500 ft, and incorporating or	LIDAR with ground 0.2 m res at 16, 500 ft (app. 4000 m)	Optech Orion C300-1: 1/7500 x altitude; 5 mm (z); 1541 nm; Across-track point spacing at 1km [m]: 0.05	
		RIEGL VZ-4000 This 3D VZ-Line Laser Scanner offers superior and unrivalled long range measurement performance of up to 4000 m reflectorlessly with 1while still maintaining completely eye safe operation (Laser Class 1). RIEGL's unique V-Line technology is	http://www.mena3d.com/lidar-technology.html

specially designed to incorporate a gimbal mounted transmitter or beam director, and specially designed parts and components therefor;		based on echo digitization and online waveform processing and is the key to enabling such extreme long range measurements.	
(b8ii) LIDAR, LADAR, or other laser range-gated systems or equipment, as follows(ii) Aircraft systems or equipment having a laser output wavelength exceeding 1,000 nm and a detection range exceeding 500 m for an obstacle with a diameter or width less than or equal to 10 mm (e.g., wire, power line);	LIDAR with > 1000 nm laser and > 500 m range for 10 mm wire	Leica ALS80-CM and Leica ALS80-HP provide 1 cm accuracy at 500 m, more than sufficient for wire	http://www.leica-geosystems.us/en/Airborne-Imaging_86816.htm
		Riegle VUX-1 UAV LIDAR – capable of wire at 500 m	http://products.rieglusa.com/product/airborne-scanners/nners-vux-1-ultra-lighweight-uas-uav-laser-scanner
(b8 iii) LIDAR, LADAR, or other laser range-gated systems or equipment, as follows (iii) Systems or equipment having an electrical bandwidth of 100 MHz or greater, and incorporating or specially designed to incorporate either a Geiger-mode detector array having at least 32 elements or a linear-mode detector array having at least 128 elements;	LIDAR with > 100 MHz BW	Aurea Technology (France)	http://aureatechnology.net/en/applications/lidar.html
C2 (2) Photon detector, microbolometer detector, or multispectral detector infrared focal plane arrays (IRFPAs) having a peak response within the wavelength range exceeding 900 nm but not exceeding 30,000 nm and not integrated into a permanent encapsulated sensor assembly, and detector elements therefor;	IR focal planes	Hamamatsu InGaAs area image sensor 64 x 64 model G11097-0606S	http://www.hamamatsu.com/jp/en/G11097-0606S.html
C4 Two-dimensional photon detector IRFPAs described in paragraph (c)(2) of this category in a permanent		Atik Cameras (UK) - 16MPixel Short Wave Infra-Red scanning camera featuring an InGaAs sensor for imaging in the 0.9um to 1.7um range	http://www.atik-cameras.com/where-to-buy-atik-cameras/

encapsulated sensor assembly, having greater than 256 detector elements			
		Mikro Tassim 640 x 512	http://www.mikro-tasarim.com.tr/products/view/5
		Stemmer Imaging (UK)	*www.stemmer-imaging.co.uk/*
Category VIII. (3) Wafers incorporating structures for either a ROIC controlled in paragraph (e)(4) or (5) of this category, or an IRFPA or detector elements therefor controlled in paragraph (c)(2) of this category; - (ii) Two-dimensional photon detector IRFPA having greater than 256 detector elements; (4) (4) Read-Out Integrated Circuits (ROICs) specially designed for an IRFPA controlled in paragraph (c)(2) of this category or detector elements therefor, as follows: (ii) Two-dimensional photon detector IRFPA having greater than 256 detector elements (16 x 16); Note to paragraph (5) ROICs specially designed for a camera/core/packaged IRFPA subject to the controls of this subchapter; (e)(4): <u>ROICs are specially designed for an infrared focal plane array detector even if the detector is incorporated into an item that is not enumerated on the U.S. Munitions List.</u>	ROICS – **seemingly all ROICs if they are IR**	Mikro-Tasarim (Turkey) ROIC Mikro-Tasarim's (http://www.mikro-tasarim.com.tr/) Sabanci University Readout Integrated Circuit Research Group Mikrosens (http://www.mikrosens.com.tr/en/_	http://www.mikro-tasarim.com.tr/ Mikro-Tasarim's (**http://www.mikro-tasarim.com.tr/**) Mikro-Tasarım is a fabless semiconductor company specialized in the development of advanced, high-performance Readout Integrated Circuit (ROIC) and sensors working in various spectral bands (such as UV, visible, NIR, SWIR, MWIR, and LWIR) as well as Application Specific Integrated Circuit (ASIC) products for scientific, industrial, and commercial imaging applications Sabanci University Readout Integrated Circuit Research Group (**http://roic.sabanciuniv.edu/**) We are not aware of a similar US based academic group focused on ROICs. "Mikrosens' microbolometer is developed to be produced at any standard CMOS or MEMS foundry, leading to cost advantage, simplicity, and flexibility."

From: efy <efy@boulder.swri.edu>
Sent: Monday, July 06, 2015 5:18 PM
To: PublicComments
Subject: RIN0694-AF75

To: US Department of Commerce
Subject: Proposed changes to bring ICCD, EMCCD and InGaAs camera technologies under ITAR regulations

Dear Sir/Madam:

I am an astronomer at Southwest Research Institute in Boulder, CO. My colleagues and I have funded NASA and NSF programs to observe occultations (events where a planet moves briefly in front of a star) to probe planetary atmospheres. This technique has a long and rich history of results, including the discovery of Pluto's atmosphere.

This research requires that we take cameras to areas on the Earth where the events will be observable -- for example, we just returned from Australia and New Zealand, where we observed Pluto moving in front of a bright star from seven ground-based locations. These observations require low readnoise, high frame rate cameras, like our EMCCDs.

I am concerned that our EMCCD cameras, which we purchased under a NASA grant explicitly for observing events at locations over the world, will become regulated. Specifically, I'm concerned that cameras which we have used on telescopes over the world for the past six years will no longer be allowed on foreign deployments.

This development is especially confusing because both EMCCD and InGaAs cameras are available from non-US vendors. We could, for example, buy Raptor's EMCCD and InGaAs cameras (from the UK) and have them shipped to Australia for observations. If EMCCD and InGaAs cameras cannot be taken out of the US for observations, then we cannot meet the proposed goals in our funded NASA programs.

Thank you for your attention.

Regards,
-Eliot

--
==========
Eliot F. Young, Sc.D., Principal Scientist
Southwest Research Institute
1050 Walnut St
Boulder, CO 80302
720-432-2333 (cell and office)

UNIVERSITY OF CALIFORNIA, BERKELEY

BERKELEY • DAVIS • IRVINE • LOS ANGELES • RIVERSIDE • SAN DIEGO • SAN FRANCISCO SANTA BARBARA • SANTA CRUZ

Xiang Zhang, Ph. D.
TEL.: (510) 643-4978
FAX.: (510) 643-5599
E-mail:xiang@berkeley.edu

Ernest S. Kuh Endowed Chair Professor and Director
NSF Nano-scale Science and Engineering Center (NSEC)
3112 Etcheverry Hall, University of California
Berkeley, CA 94720-1740

Regulatory Policy Division
Bureau of Industry and Security
U.S. Department of Commerce
14th Street and Pennsylvania Ave., N.W.
Room 2099B
Washington, D.C. 20230

Subject: Revisions to the Export Administration Regulations (EAR): Control of Fire Control, Range Finder, Optical, and Guidance and Control Equipment

To Whom It May Concern:

My name is Xiang Zhang. I am the Ernest S. Kuh Endowed Chair Professor at University of California, Berkeley and the Materials Sciences Division Director at Lawrence Berkeley National Laboratory. My research mainly involves micro-nano scale engineering, novel 3D fabrication technologies in microelectronics and photonics, micro and nano-devices, nano-lithography and nano-instrumentation, rapid prototyping, bio-MEMS, and semiconductor manufacturing.

I， Xiang Zhang at University of California, Berkeley, appreciates the opportunity to comment on the proposed changes to the EAR.

My lab at 5130 Etcheverry Hall, University of California, Berkeley conduct research involving nano-optical charactorizations, optical imaging, and optoelectronic experiments. We routinely use and will use EMCCDs, intensifier CCDs, and near-infrared InGaAs Cameras. My lab would be unable to purchase or use any ITAR controlled equipment. As a whole, University of California at Berkeley is very hesitant to purchase any ITAR restricted items as restricting their access to foreign graduate students is onerous. As a Principal Investigator, it would be impossible for me to justify the purchase of a scientific tool that could not be used by many of my students.

It would be especially devastating for the photonics research community if the US government were to place ITAR restrictions on scientific grade cameras, such as intensifier CCD, near infrared InGaAs and EMCCD cameras. If this were to happen, it will setback US research significantly, especially, in contrast to the research in EU and Asia have no such restrictions exist from their respective Governments.

I feel the proposed changes would present a major restriction of basic photonics research and therefore I would not support it.

If you require any further information, please contact me at 510-643-4978 or via email at xiang@berkeley.edu

Sincerely,

Xiang Zhang, Ph. D
Ernest S. Kuh Endowed Chair and Director
University of California, Berkeley

From: Zia, Rashid <rashid_zia@brown.edu>
Sent: Monday, July 06, 2015 3:12 PM
To: PublicComments
Subject: RIN0694-AF75

To Whom It May Concern:

I appreciate the opportunity to comment on the proposed changes to the EAR. I am very concerned about the proposal to place ITAR restrictions on scientific grade cameras. Such changes would present a major restriction on the basic research community in optics and photonics, which have been identified by the US National Academies as "Essential Technologies for Our Nation."

By way of introduction, I hold a tenured faculty position at Brown University, where I am Associate Professor of Engineering and Physics. I received my M.S. and Ph.D. in Electrical Engineering from Stanford University, where I was supported by a National Defense Science and Engineering Graduate (NDSEG) Fellowship. As a faculty member at Brown, I have received a National Science Foundation CAREER Award and a Presidential Early Career Award for Scientists and Engineers (PECASE). (For reference, the PECASE award is "the highest honor bestowed by the U.S. government on scientists and engineers beginning their independent careers.") As an expert in the field of photonics, I have served as a reviewer for the Army Research Office, the National Science Foundation, the U.S. Department of Energy's Solid-State Lighting Program, the U.S. Department of Energy's Office of Basic Energy Sciences, and the U.S. Civilian Development and Research Foundation. I also currently lead a large-scale 5-year, 7.5-million-dollar Multidisciplinary University Research Initiative (MURI) on Quantum Metaphotonics & Metamaterials sponsored by the U.S. Air Force Office of Scientific Research. In the course of our basic research programs, my lab routinely uses scientific grade cameras, including EMCCDS, intensified CCDs, and near-infrared InGaAs focal plane arrays.

As a point of reference, my lab is unable to purchase or use any ITAR controlled equipment. As a whole, Brown University is very hesitant to purchase any ITAR restricted items as restricting their access to foreign graduate students is onerous. As a Principal Investigator, it would be impossible for me to justify the purchase of a scientific tool that could not be used by many of my students. I also know that many of my MURI collaborators (from leading institutions such as Caltech, MIT, Penn, Stanford, UC Berkeley, and UT Austin) share similar concerns and restrictions.

Therefore, I sincerely believe that it would be devastating for the photonics research community if the US government were to place ITAR restrictions on scientific grade cameras, such as intensifier CCD, near-infrared InGaAs and EMCCD cameras. If this were to happen, it will setback US research significantly, especially, in contrast to the researchers in EU and Asia who face no such restrictions from their respective Governments.

If you require any further information, please contact me at 401-863-6351 or via email at Rashid_Zia@brown.edu

Sincerely,

Rashid ZIa
Associate Professor of Engineering and Physics
Brown University